Docusign Envelope ID: 84EDD841-85BB-4DE3-81A8-8FEB0E4BAA76

5/26/20

PAVEMENT SCHEDULE	
C1	1.5" TYPE S9.5C
C2	3" TYPE S9.5C
C3	1.5" TYPE S9.5D
C4	3" TYPE S9.5D
D1	3.5" TYPE I19.0C
D2	4" TYPE I19.0C
E1	4" TYPE B25.0C
E2	11" TYPE B25.0C
J1	6" ABC
K	SUBGRADE STABILIZATION
N	GEOTEXTILE
P	PRIME COAT
R1	2'-6" C&G
R2	5" CONC. ISLAND (KEYED IN)
R3	SHOULDER BERM GUTTER
T	EARTH MATERIAL
U	EXISTING ASPHALT PVMT
V1	INC. MILLING
V2	1.5" MILLING
W	WEDGING
Y	RUMBLE STRIPS

NOTE: PAVEMENT EDGE SLOPES ARE 1:1 UNLESS SHOWN OTHERWISE

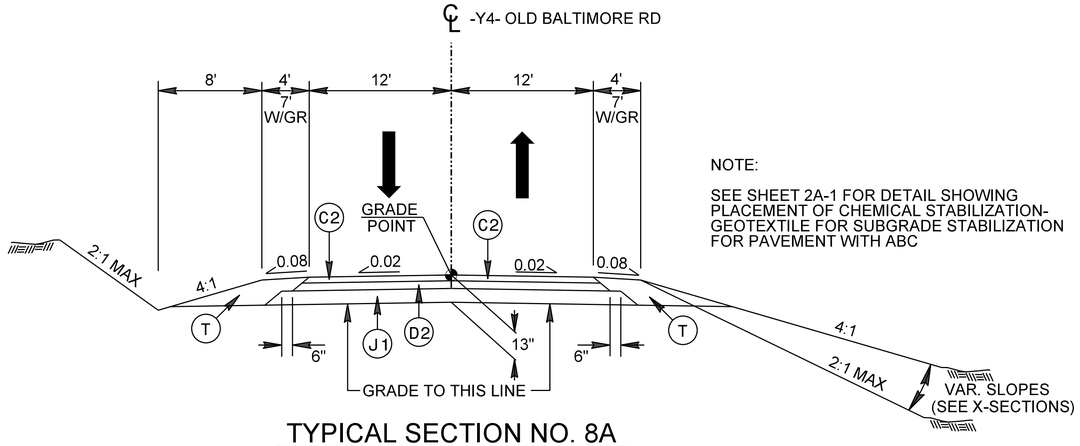

NOTE:

SEE SHEET 2A-1 FOR DETAIL SHOWING PLACEMENT OF CHEMICAL STABILIZATION-GEOTEXTILE FOR SUBGRADE STABILIZATION FOR PAVEMENT WITH ABC

TYPICAL SECTION NO. 8A

-Y4- STA. 10+12.00 TO 13+75.00

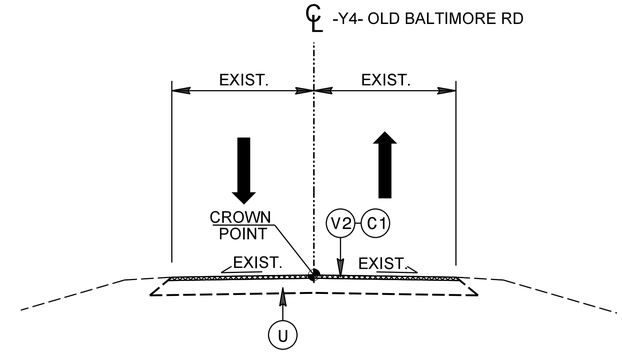

TYPICAL SECTION NO. 8C

-Y4- STA. 15+20.00 TO 20+50.00

INSET "H" SHOULDER BERM GUTTER DETAIL (SBG)

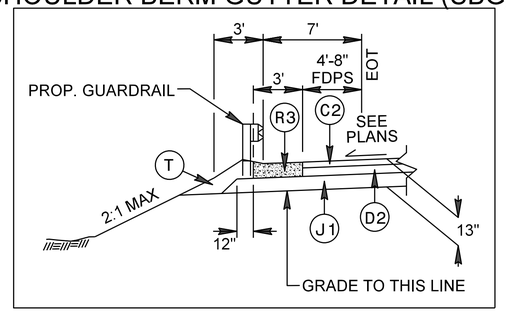

USE INSET "H" IN CONJUNCTION WITH TYPICAL SECTION NO. 8A

-Y4- STA. 10+20.79 TO 13+75.00 LT
-Y4- STA. 13+30.00 TO 13+75.00 RT

INSET "I" SHOULDER BERM GUTTER DETAIL (SBG)

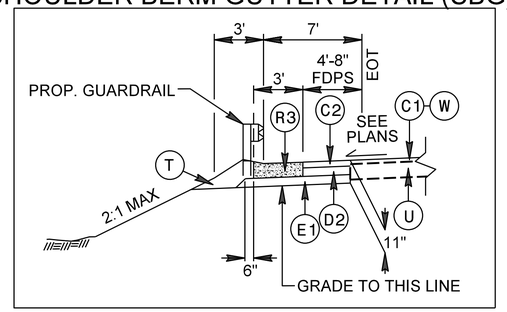

USE INSET "I" IN CONJUNCTION WITH TYPICAL SECTION NO. 8B

-Y4- STA. 13+75.00 TO 14+75.00 LT
-Y4- STA. 13+75.00 TO 14+50.00 RT

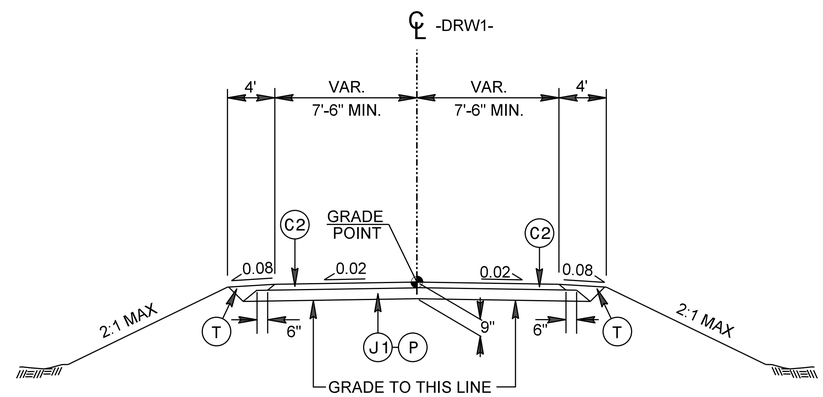

TYPICAL SECTION NO. 9

-DRW1- STA. 10+12.00 TO 10+85.00

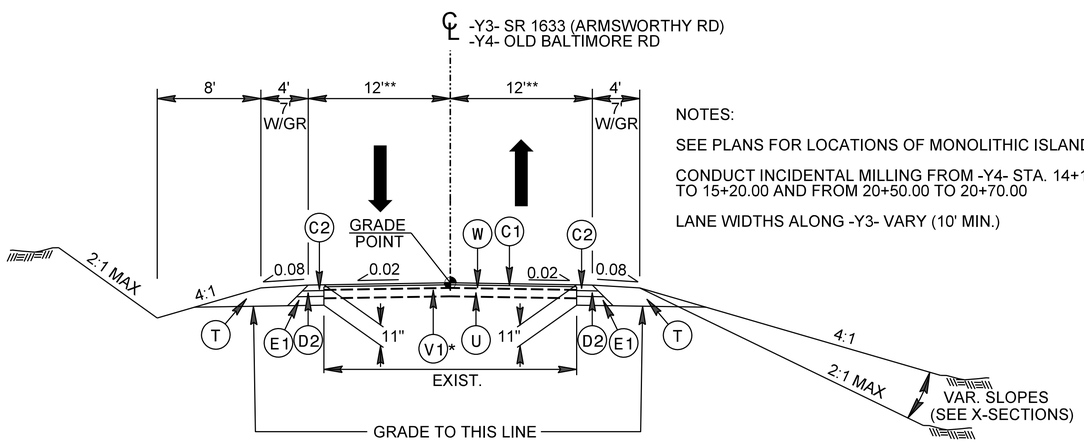

NOTES:

SEE PLANS FOR LOCATIONS OF MONOLITHIC ISLANDS

CONDUCT INCIDENTAL MILLING FROM -Y4- STA. 14+15.00 TO 15+20.00 AND FROM 20+50.00 TO 20+70.00

LANE WIDTHS ALONG -Y3- VARY (10' MIN.)

TYPICAL SECTION NO. 8B

-Y3- STA. 10+10.00 TO 11+26.4
-Y4- STA. 13+75.00 TO 15+20.00
-Y4- STA. 20+50.00 TO 22+23.69

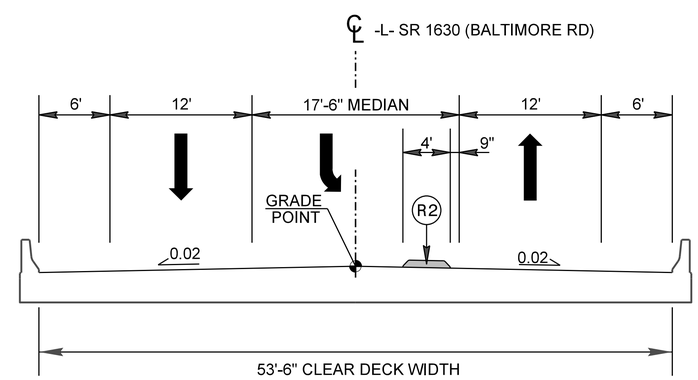

TYPICAL SECTION ON STRUCTURE

-L- STA. 69+83.09 TO 72+07.84

NOTE: SEE STRUCTURE PLANS FOR STRUCTURE CONSTRUCTION DETAILS.

U-6187
FINAL | 2A-5

NORTH CAROLINA DEPARTMENT OF TRANSPORTATION
DAVIE COUNTY

ROADWAY DESIGN UNIT

ROADWAY DESIGN ENGINEER
NORTH CAROLINA PROFESSIONAL SEAL 033822 ENGINEER JONATHAN P. SOIKA
8/25/2025

PAVEMENT DESIGN ENGINEER
NORTH CAROLINA PROFESSIONAL SEAL 044590 ENGINEER ANDREW D. WARGO
8/25/2025

PREPARED BY
vhb
VHB Engineering NC, P.C. (C-3705)
940 Main Campus Drive, Suite 500
Raleigh, NC 27606

DOCUMENT NOT CONSIDERED FINAL UNLESS ALL SIGNATURES COMPLETED