Docusign Envelope ID: A6748FC7-C916-4D60-BE11-9163976BB473

PROJECT REFERENCE NO.	SHEET NO.
U-4700CC	2A-2

ROADWAY DESIGN ENGINEER
9/3/2025 | 7:26:35 AM PDT
NORTH CAROLINA PROFESSIONAL SEAL 26960 ENGINEER REECE M. SCHULER
DocuSigned by: Reece Schuler
1B82A024C7B24FC...

PAVEMENT DESIGN ENGINEER
9/3/2025 | 9:20:00 AM EDT
NORTH CAROLINA PROFESSIONAL SEAL 049851 ENGINEER RAMIE A. SHAW
DocuSigned by: Ramie Shaw
6568D79D467E4C6...

DOCUMENT NOT CONSIDERED FINAL UNLESS ALL SIGNATURES COMPLETED

Johnson, Mirmiran, & Thompson Inc.
4700 Falls of Neuse Rd, Suite 100,
Raleigh, NC, 27609
License No: C-3097

PAVEMENT SCHEDULE	
C1	3" TYPE S9.5C
C2	VAR. TYPE S9.5C
D1	4" TYPE I19.0C
D2	VAR. TYPE I19.0C
E1	5.5" TYPE B25.0C
E2	VAR. TYPE B25.0C
R1	1'-6" CURB AND GUTTER
R2	2'-6" CURB AND GUTTER
R3	EXPRESSWAY GUTTER
R4	8" X 12" CONCRETE CURB
T	EARTH MATERIAL
U	EXISTING PAVEMENT
V1	MILLING BITUMINOUS PAVEMENT. 1.5" DEPTH
V2	MILLING BITUMINOUS PAVEMENT. 0" TO 1.5" DEPTH
W	VAR. DEPTH ASPHALT PAVEMENT

NOTE: PAVEMENT EDGE SLOPES ARE 1:1 UNLESS SHOWN OTHERWISE.

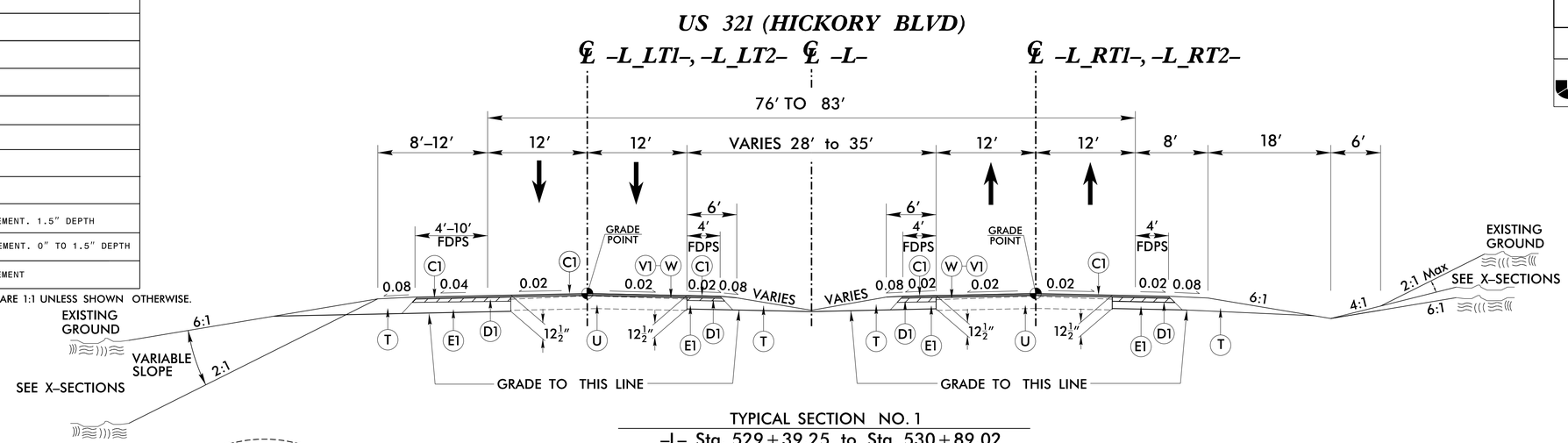

TYPICAL SECTION NO. 1
-L- Sta. 529+39.25 to Sta. 530+89.02
-L- Sta. 558+09.57 to Sta. 559+09.57

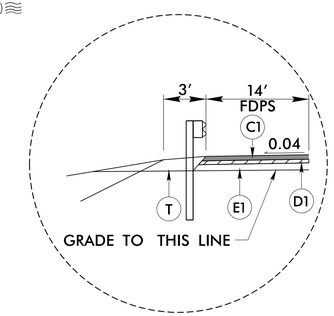

INSET 'A'
-L- Sta. 534+56.40 LT to Sta. 540+87.65 LT

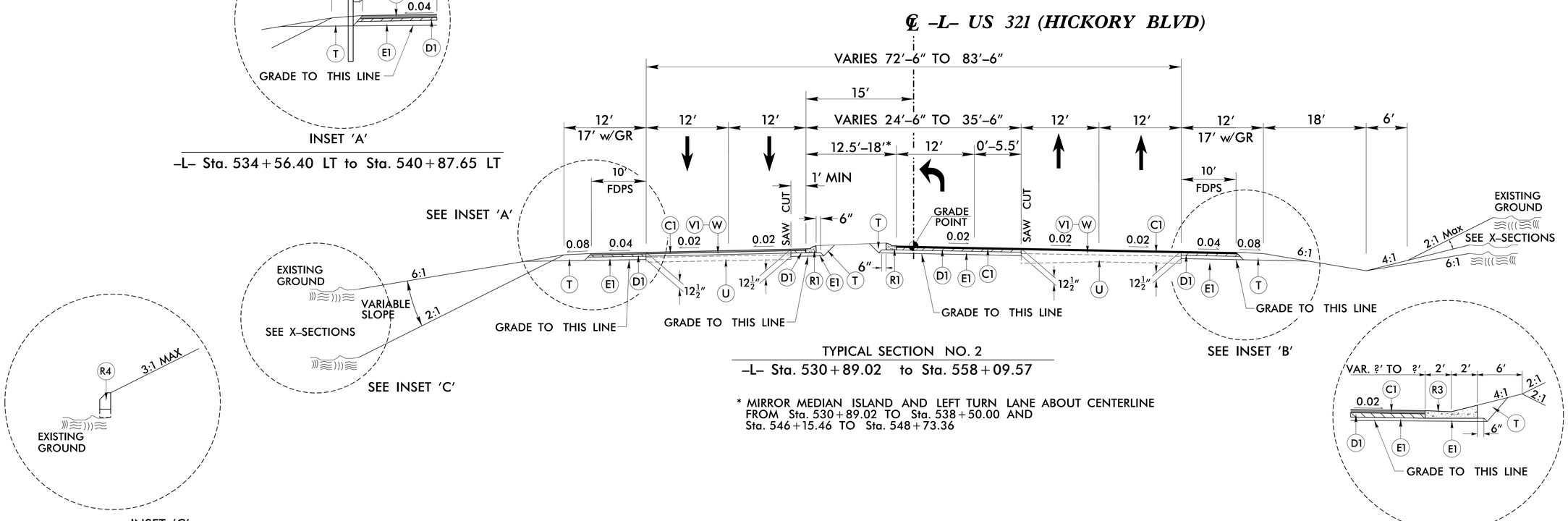

TYPICAL SECTION NO. 2
-L- Sta. 530+89.02 to Sta. 558+09.57

* MIRROR MEDIAN ISLAND AND LEFT TURN LANE ABOUT CENTERLINE FROM Sta. 530+89.02 TO Sta. 538+50.00 AND Sta. 546+15.46 TO Sta. 548+73.36

INSET 'C'
-L- Sta. 541+19.12 LT to Sta. 541+89.67 LT

INSET 'B'
-L- Sta. 530+89.25 RT to Sta. 533+18.54 RT

9/3/2025 8:56:19 AM
U-4700CC_RDWY_TYP2A-1.dgn
User: RBrenner