Docusign Envelope ID: 2804C201-6473-4106-9538-2156F531082E

LAST SAVED: 07/24/2025

L:\Cort-20.03 24-27 Water & Sewer Relocation U-3628\800 Drawings\810 Design Drawings\02 Civil\Details\00001 Miscellaneous Details I.dwg; Last Saved By: RGARZO, 7/24/2025 1:24:29 PM; Miscellaneous Details II; Plotted By: Robert Garzo, 07/24/25 01:27:03 PM
XREFs: Water Piping And Trench Details=L:\RoCo-21.04 Sewer Capacity Improvements\800 - Drawings\810 Design Drawings\02 Civil\Details\Water Piping And Trench Details.dwg; LKC-NCDOT-gOOtbx01=..\LKC-NCDOT-gOOtbx01.dwg; IMAGE: L:\Util\CallBeforeYouDig.gif
REVISIONS
L:\Cort-20.03 24-27 Water & Sewer Relocation U-3628\800 Drawings\810 Design Drawings\02 Civil\Details\00001 Miscellaneous Details I.dwg; TAB: MISCELLANEOUS DETAILS II

LKC Engineering
Landscape Architecture
Surveying
LKC Engineering, pllc
140 Aqua Shed Court
Aberdeen, NC 28315
O: 910.420.1437
F: 910.637.0096
lkcengineering.com
License No. P-1095

PROJECT REFERENCE NO.	SHEET NO.
U-3628	UC-3E
DESIGNED BY: MAL	
DRAWN BY: RMG	
CHECKED BY: MAL	
APPROVED BY: -	
REVISED: -	
NORTH CAROLINA DEPARTMENT OF TRANSPORTATION	
UTILITIES ENGINEERING SEC. PHONE: (919) 707-6690 FAX: (919) 250-4151	

NORTH CAROLINA PROFESSIONAL SEAL 036286 ENGINEER MARK A. LACY
Docusigned by: Mark A Lacy 444DD0510CCC4BF 7/24/2025

UTILITY CONSTRUCTION

DOCUMENT NOT CONSIDERED FINAL UNLESS ALL SIGNATURES COMPLETED

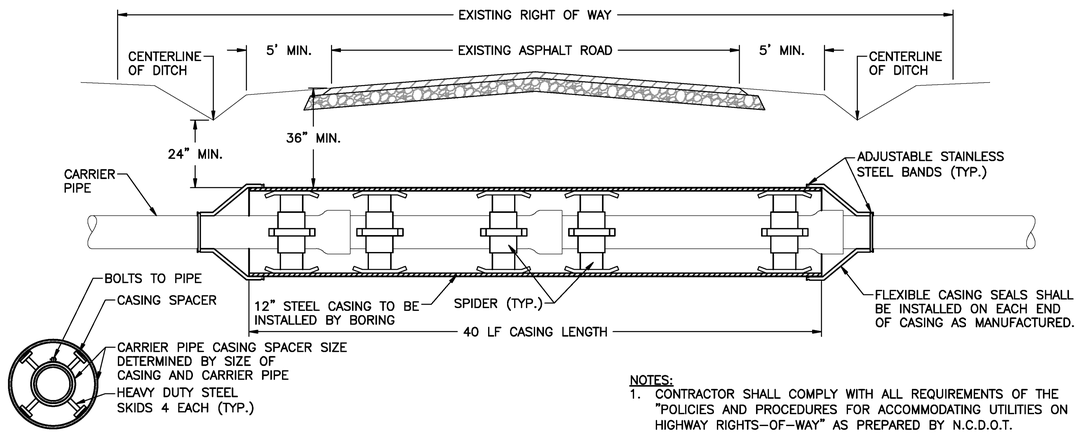

NOMINAL D.I. CARRIER PIPE DIA. (INCHES)	STEEL CASING MINIMUM O.D. (INCHES)	MIN. WALL THICKNESS FOR HIGHWAYS (INCHES)	MIN. WALL THICKNESS FOR RAILROADS (INCHES)
3	8.625	0.250	0.250
4	10.750	0.250	0.250
6	14.0	0.250	0.250
8	16.0	0.250	0.312
10	18.0	0.250	0.312
12	20.0	0.250	0.375
14	24.0	0.250	0.375
16	26.0	0.312	0.500
18	28.0	0.312	0.500
20	30.0	0.312	0.500
24	34.0	0.500	0.625

NOTES:
1. CONTRACTOR SHALL COMPLY WITH ALL REQUIREMENTS OF THE "POLICIES AND PROCEDURES FOR ACCOMMODATING UTILITIES ON HIGHWAY RIGHTS-OF-WAY" AS PREPARED BY N.C.D.O.T.

TYPICAL BORING AND SPIDER

N.T.S.

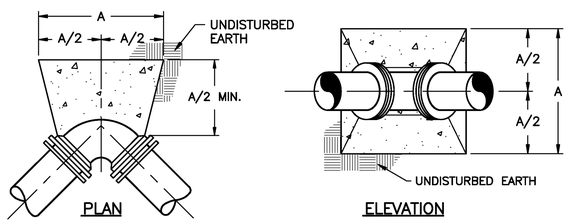

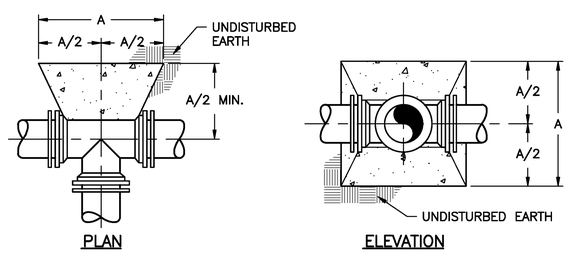

NOTES:
1. THRUST BLOCKS SHALL BE CONSTRUCTED OF 2500 P.S.I. CONCRETE.
2. INSTALL TAR PAPER AROUND BEND OR FITTING TO PREVENT CONCRETE BONDING.

DIMENSION A (FEET)									
BEND / FITING	PIPE SIZE (NOM. DIA. IN INCHES)								
	4	6	8	10	12	16	18	20	24
90° BEND	1.4	2.0	2.7	3.4	4.0	5.4	6.0	6.7	8.0
45° BEND	1.0	1.5	2.0	2.5	3.0	4.0	4.5	5.0	5.9
22.5° BEND	0.8	1.1	1.5	1.8	2.2	2.9	3.2	3.6	4.3
11.25° BEND	0.5	0.8	1.0	1.3	1.5	2.0	2.3	2.5	3.0
TEE BRANCH/DEAD END	1.2	1.7	2.3	2.9	3.4	4.5	5.1	5.7	6.8

CONCRETE THRUST BLOCK DETAIL FOR WATER MAIN HORIZONTAL BENDS AND TEES

N.T.S.

NOTES:
1. INSTALL MARKER POSTS ON EDGE OF THE DOT R/W LINE.
2. PROVIDE MARKER POSTS AT ALL LINE VALVES.
3. ABBREVIATIONS STAMPED ON POST AS FOLLOWS: MV = MAIN VALVE; BO = BLOW OFF VALVE.

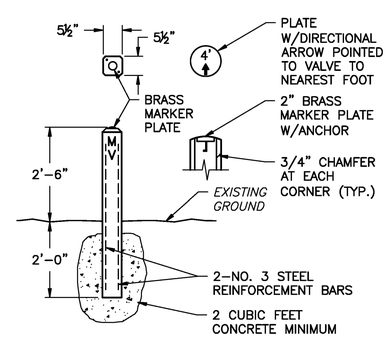

VALVE MARKER POST DETAIL

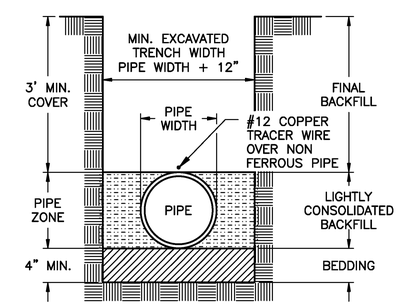

NOTES:
1. BEDDING SHALL BE 4" MINIMUM ABC STONE, AND SHALL PROVIDE UNIFORM SUPPORT FOR THE FULL LENGTH OF PIPE.
2. BACKFILL PER NCDOT STANDARDS.

TRENCH DETAIL LAYING CONDITIONS

N.T.S.