DocuSign Envelope ID: C53CC5D1-4D7E-429B-A2A0-D545A17F7441

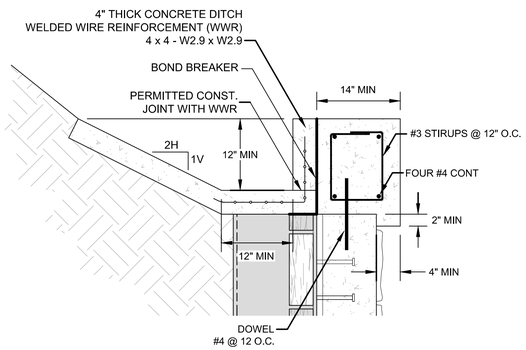

3 **CONCRETE COPING AND DITCH DETAIL WITH CIP CONCRETE FACING** SCALE: N.T.S.

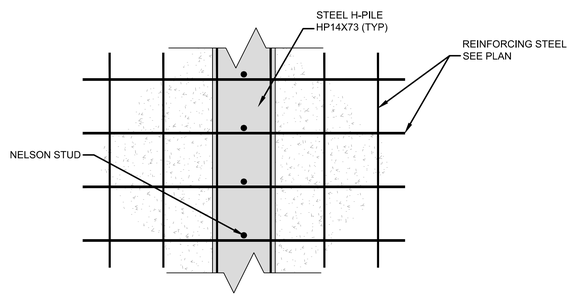

4 **CIP CONCRETE FACING DETAILS - ELEVATION VIEW** SCALE: N.T.S.

CLASS B TENSION LAP SPLICE GRADE 60 BARS (INCHES)						
BAR SIZE	f'c = 3000		f'c = 4000		f'c = 5000	
	TOP	OTHER	TOP	OTHER	TOP	OTHER
#3	28	22	25	19	22	17
#4	38	29	33	25	29	23
#5	47	36	41	31	36	28
#6	56	43	49	37	43	34
#7	81	63	71	54	63	49
#8	93	72	81	62	72	56
#9	105	81	91	70	81	63
#10	116	90	101	78	90	69
#11	128	98	111	85	99	76

NOTES:
1. LAP LENGTHS ASSUME CLEAR SPACING BETWEEN BARS OF 2 BAR DIAMETERS, AND A MINIMUM COVER OF 1 BAR DIAMETER.
2. TOP BARS ARE DEFINED AS HORIZONTAL BARS WITH MORE THAN 12 INCHES OF FRESH CONCRETE BELOW.
3. LAP SPLICES IN CONTINUOUS MEMBER SHALL BE STAGGERED.

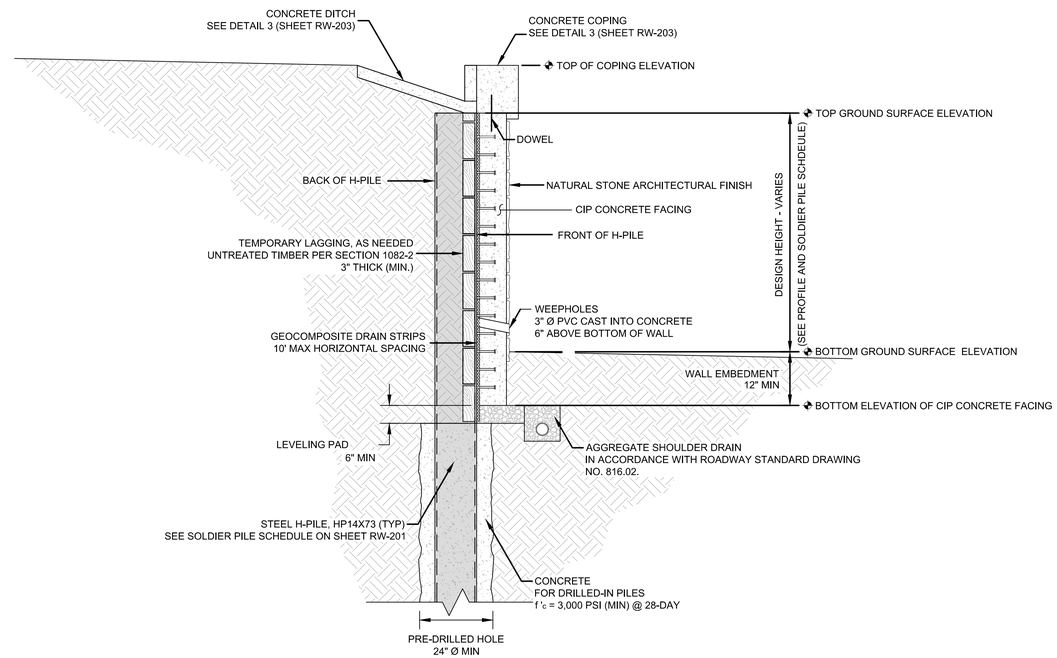

1 **TYPICAL SOLDIER PILE WALL SECTION WITH CIP CONCRETE FACING** SCALE: N.T.S.

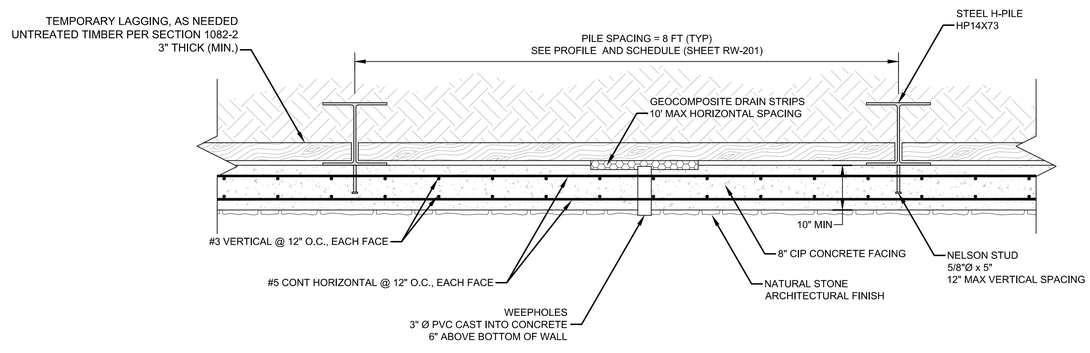

2 **CIP CONCRETE FACING DETAIL - PLAN VIEW** SCALE: N.T.S.

NORTH CAROLINA PROFESSIONAL SEAL 018979 ENGINEER MOHAMMED A. MULLA

Mohammed A. Mulla
4EFECBAFC80B8...

ECS SOUTHEAST, LLP
1900 HENDERSONVILLE ROAD
ASHEVILLE, NC 28803
(828) 665-2307
NC REGISTERED ENGINEERING
FIRM # F-1078

"SETTING THE STANDARD FOR SERVICE"

Vaughn & Melton

RETAINING WALLS

PROJECT: R-5863
US 64 BUISNESS
FROM US 64 TO SR 107 (MAIN STREET)
CLAY COUNTY, NORTH CAROLINA

SOLDIER PILE RETAINING WALL

ECS REVISIONS
–
–
–
–
–

PRINCIPAL	DESIGNER
MAM	RTS

SCALE: N.T.S.
PROJECT NO.: R-5863
SHEET: W-7
DATE: 10/04/2023