TIP PROJECT: B-5716

CONTRACT: C204829

STATE	STATE PROJECT REFERENCE NO.	SHEET NO.	TOTAL SHEETS
N.C.	B-5716	ST	

STATE PROJECT NO.	F.A. PROJ. NO.	DESCRIPTION
45672.1.1	BRZ-1138(021)	PE
45672.2.1	BRZ-1138(021)	RW/UTL
45672.3.1	BRZ-1138(021)	CONST.

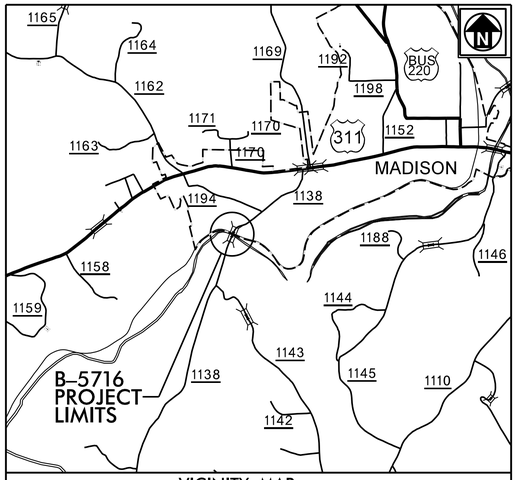

VICINITY MAP
(NOT TO SCALE)

STATE OF NORTH CAROLINA
DIVISION OF HIGHWAYS

ROCKINGHAM COUNTY

LOCATION: BRIDGE NO. 140 OVER DAN RIVER ON SR 1138 (LINDSEY BRIDGE ROAD)

TYPE OF WORK: DRAINAGE, GRADING, PAVING AND STRUCTURES

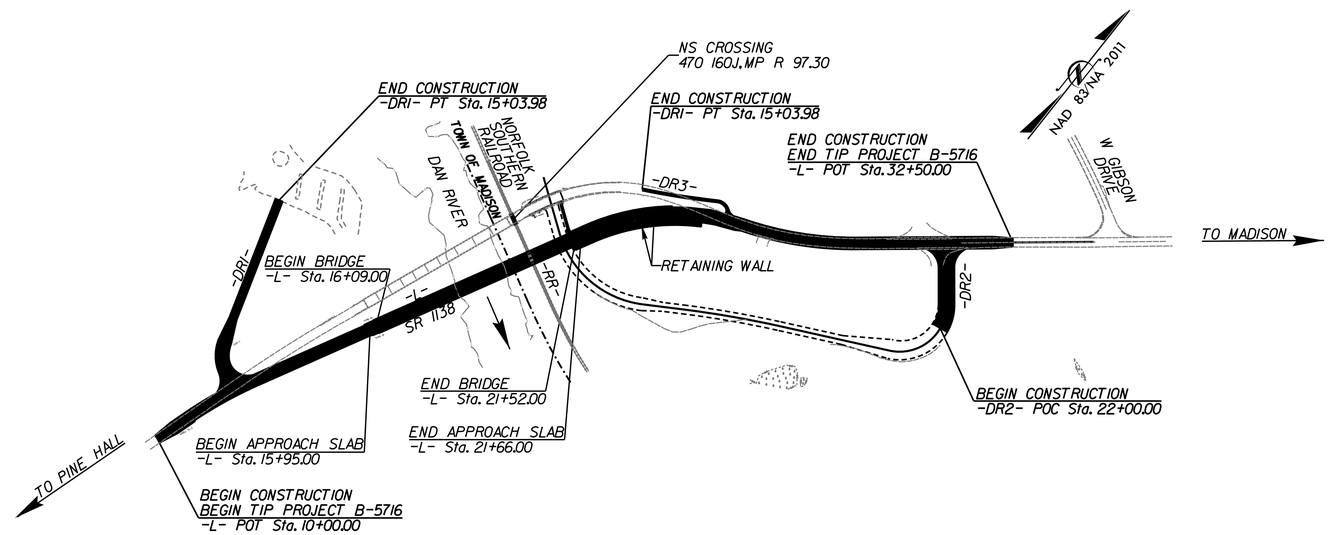

STRUCTURES

DOCUMENT NOT CONSIDERED FINAL
UNLESS ALL SIGNATURES COMPLETED

STATE OF NORTH CAROLINA DEPARTMENT OF TRANSPORTATION

DESIGN DATA

ADT 2025 = 1120
ADT 2040 = 1700
D = 50%
T = 6%*
V = 40 MPH

*TTST = 3% DUAL = 3%

MINOR COLLECTOR

PROJECT LENGTH

LENGTH ROADWAY TIP PROJECT	=	0.323 MILES
LENGTH STRUCTURE TIP PROJECT	=	0.103 MILES
TOTAL LENGTH TIP PROJECT	=	0.426 MILES

Prepared In the Office of Matt MacDonald for

DIVISION 7

NORTH CAROLINA DEPARTMENT OF TRANSPORTATION

2024 STANDARD SPECIFICATIONS

RIGHT OF WAY DATE:
OCTOBER 18, 2022

LETTING DATE:
AUGUST 19, 2025

NCDOT CONTACT: DANIEL DAGENHART
DIVISION BRIDGE PROGRAM MANAGER

PLANS PREPARED BY:

MOTT MACDONALD
930 Main Campus Drive, Suite 200
Raleigh, NC 27606
(919) 552-2253
www.mottmac.com

LICENSE NO. F-0669

7/7/2025
10:46:59 AM
c:\pwworking\hmm\rail_transit\wil57077\d0171488\400_000_B5716_TSH.dgn
WIL57077

Docusign Envelope ID: 94478B89-8910-4784-B75E-FFD00CC24A0F

F.A. PROJECT NO. BRZ-1138(021)

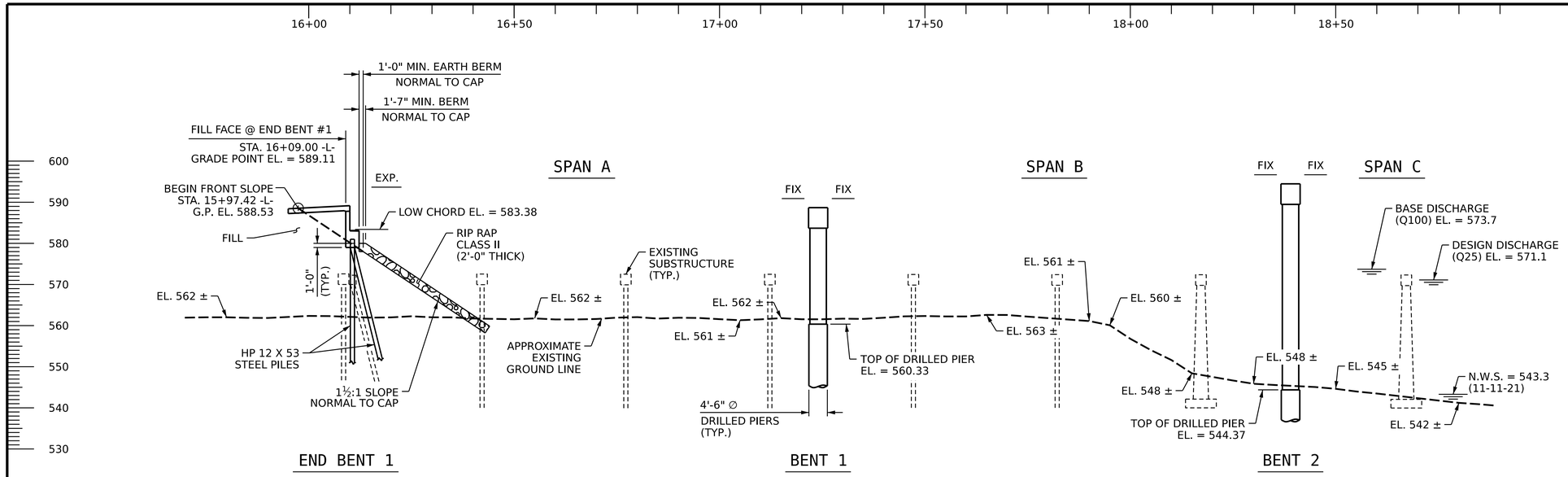

SECTION ALONG -L-

GRADE DATA -L-

(+)4.9619% (-)2.4392%

PI STA 20+00.00 -L-
EL. 608.510
VC = 300'

HYDRAULIC DATA:	
DESIGN DISCHARGE	= 27,000 CFS
FREQUENCY OF DESIGN FLOOD	= 25 YEAR
DESIGN HIGH WATER ELEVATION	= 571.1
DRAINAGE AREA	= 594 SQ. MI.
BASE DISCHARGE (Q 100)	= 35,900 CFS
BASE HIGH WATER ELEVATION	= 573.7
OVERTOPPING FLOOD DATA:	
OVERTOPPING DISCHARGE	= 59,000 CFS
FREQUENCY OF OVERTOPPING FLOOD	= 500+ YEAR
OVERTOPPING FLOOD ELEVATION	= 576.2 *
* OT OCCURS AT SAG -L- STA. 10+00 ℄	

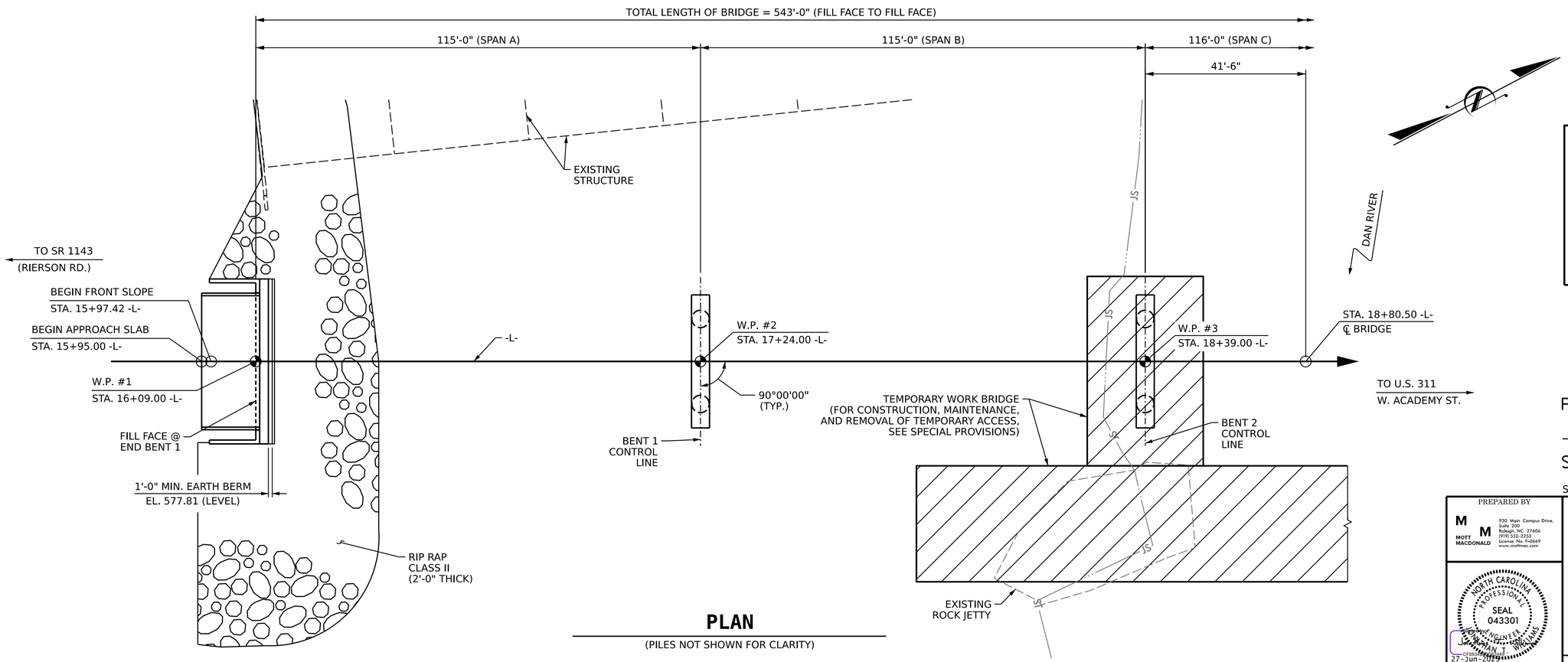

PLAN

(PILES NOT SHOWN FOR CLARITY)

I HEREBY CERTIFY THESE PLANS
ARE THE AS-BUILT PLANS

PROJECT NO. B-5716
ROCKINGHAM COUNTY
STATION: 18+80.50 -L- POT

SHEET 1 OF 5

MILEPOST R97.33
REPLACES BRIDGE #780140

PREPARED BY
MOTT MACDONALD
930 Main Campus Drive, Suite 200
Raleigh, NC 27606
(919) 553-2253
License No. F-0669
www.mottmac.com

NORTH CAROLINA PROFESSIONAL SEAL 043301 ENGINEER JOHNATHAN T. WILLIAMS
Docusigned by:
27-Jun-2024

STATE OF NORTH CAROLINA
DEPARTMENT OF TRANSPORTATION
RALEIGH

GENERAL DRAWING

BRIDGE ON SR 1138 (LINDSEY BRIDGE RD.) OVER DAN RIVER AND NSRR BETWEEN SR 1194 AND SR 1143

REVISIONS							SHEET NO.
NO.	BY:	DATE:	NO.	BY:	DATE:		S01-01
1			3				TOTAL SHEETS
2			4				48

DOCUMENT NOT CONSIDERED FINAL UNLESS ALL SIGNATURES COMPLETED

DRAWN BY :	L. L. BLANKENSHIP	DATE :	4-2023
CHECKED BY :	J. T. WILLIAMS	DATE :	2-2024
DESIGN ENGINEER OF RECORD:	J. T. WILLIAMS	DATE :	2-2024

12/16/2024 4:41:42 PM
R:\Structures\BRZ_01_780140\Plans\401_001_B5716_SMU_GD_S01-01_780140.dgn
KAVI06794

Docusign Envelope ID: 94478B89-8910-4784-B75E-FFD00CC24A0F

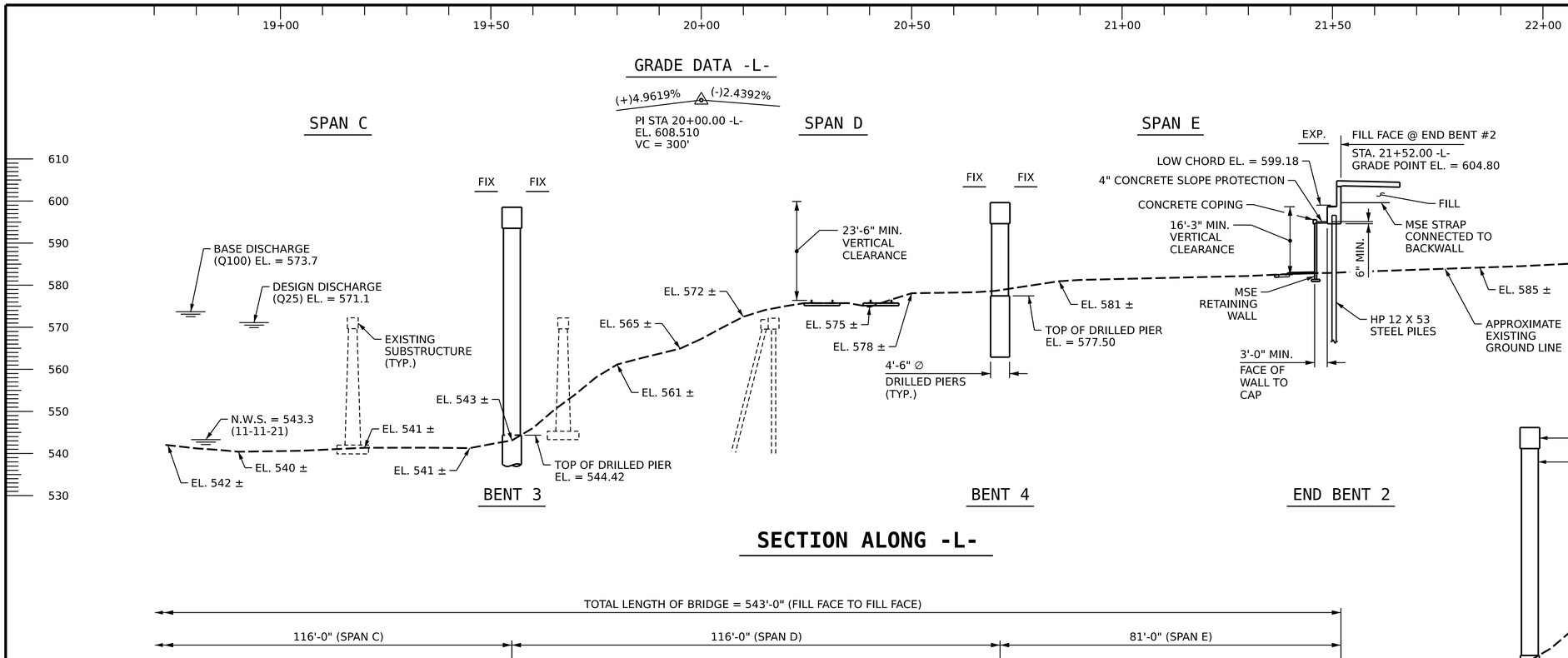

SECTION ALONG -L-

TOP OF RAIL ELEVATIONS			
LEFT RAIL		RIGHT RAIL	
STATION	ELEVATION	STATION	ELEVATION
11+61.67	576.78	11+61.67	576.77
11+81.67	576.71	11+81.67	576.70
12+01.67	576.62	12+01.67	576.61
12+21.67	576.53	12+21.67	576.53
12+41.67	576.46	12+41.67	576.46
12+61.67	576.40	12+61.67	576.40
12+81.67	576.34	12+81.67	576.34
13+01.67	576.31	13+01.67	576.29
13+21.67	576.27	13+21.67	576.24
13+41.67	576.23	13+41.67	576.18
13+61.67	576.17	13+61.67	576.11

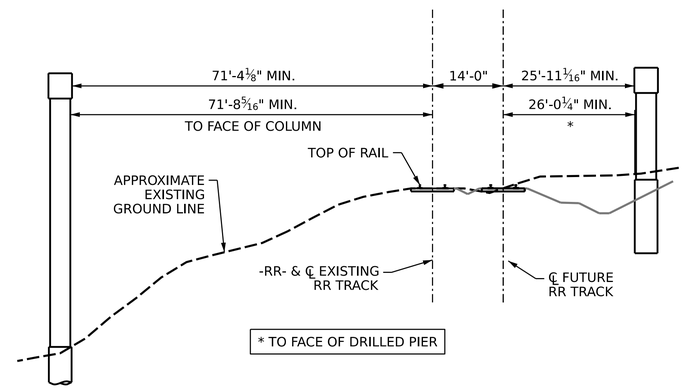

THEORETICAL SECTION THRU RAILROAD

SECTION TAKEN AT RIGHT ANGLE TO RAILROAD LOOKING DOWNSTATION

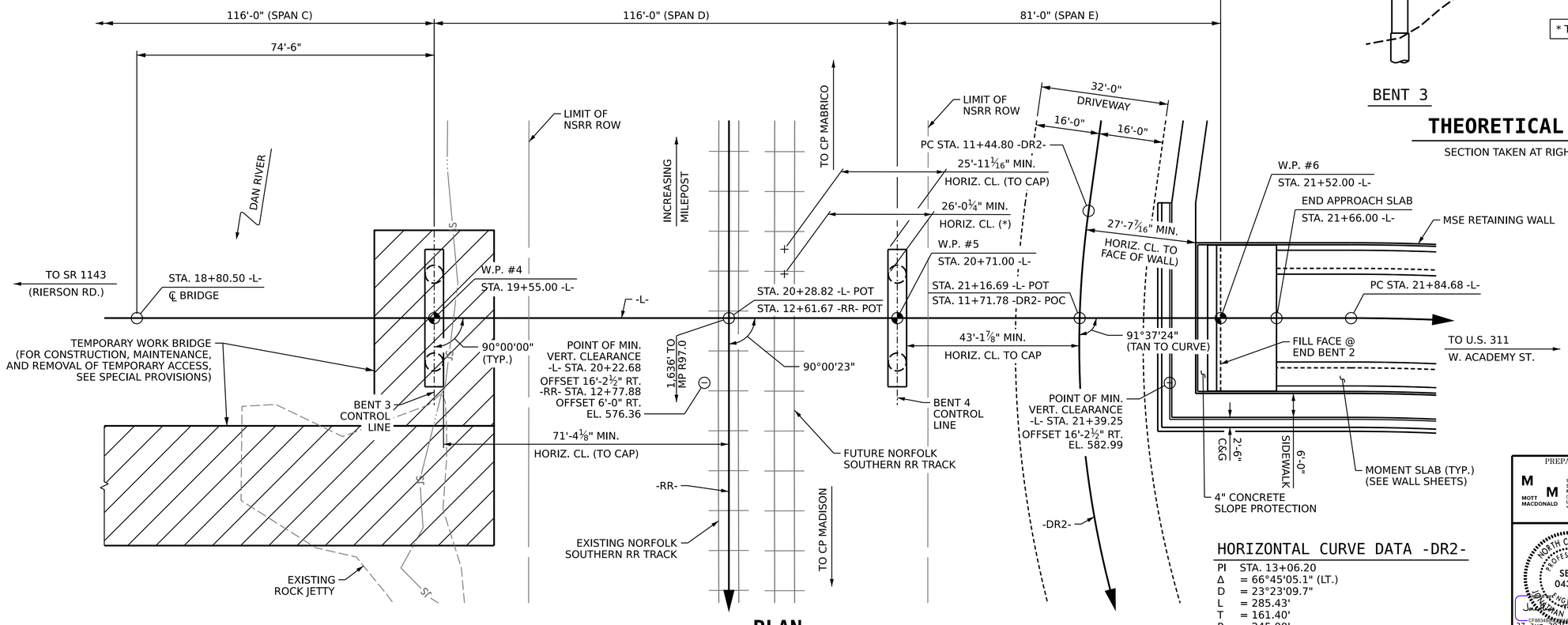

PLAN

(PILES ARE NOT SHOWN FOR CLARITY)

HORIZONTAL CURVE DATA -DR2-

PI STA. 13+06.20
Δ = 66°45'05.1" (LT.)
D = 23°23'09.7"
L = 285.43'
T = 161.40'
R = 245.00'

PROJECT NO. B-5716
ROCKINGHAM COUNTY
STATION: 18+80.50 -L-

SHEET 2 OF 5

PREPARED BY
MOTT MACDONALD
930 Main Campus Drive, Suite 200
Raleigh, NC 27606
(919) 552-2233
License No. F-0669
www.mottmac.com

NORTH CAROLINA PROFESSIONAL SEAL 043301 ENGINEER JONATHAN T. WILLIAMS
CFWilliams
27-Jun-2025

STATE OF NORTH CAROLINA
DEPARTMENT OF TRANSPORTATION
RALEIGH

GENERAL DRAWING

BRIDGE ON SR 1138 (LINDSEY BRIDGE RD.) OVER DAN RIVER AND NSRR BETWEEN SR 1194 AND SR 1143

REVISIONS						SHEET NO.
NO.	BY:	DATE:	NO.	BY:	DATE:	S01-02
1			3			TOTAL SHEETS
2			4			48

DOCUMENT NOT CONSIDERED FINAL UNLESS ALL SIGNATURES COMPLETED

DRAWN BY :	L. L. BLANKENSHIP	DATE :	4-2023
CHECKED BY :	J. T. WILLIAMS	DATE :	2-2024
DESIGN ENGINEER OF RECORD:	J. T. WILLIAMS	DATE :	2-2024

12/15/2024 4:41:48 PM
R:\Structures\B-5716_Rockingham_Co_Bridge_No_1138_Over_Dan_River\Design\B-5716_SMU_GD_S01-02_780140.dgn
KAVI06794

Docusign Envelope ID: 94478B89-8910-4784-B75E-FFD00CC24A0F

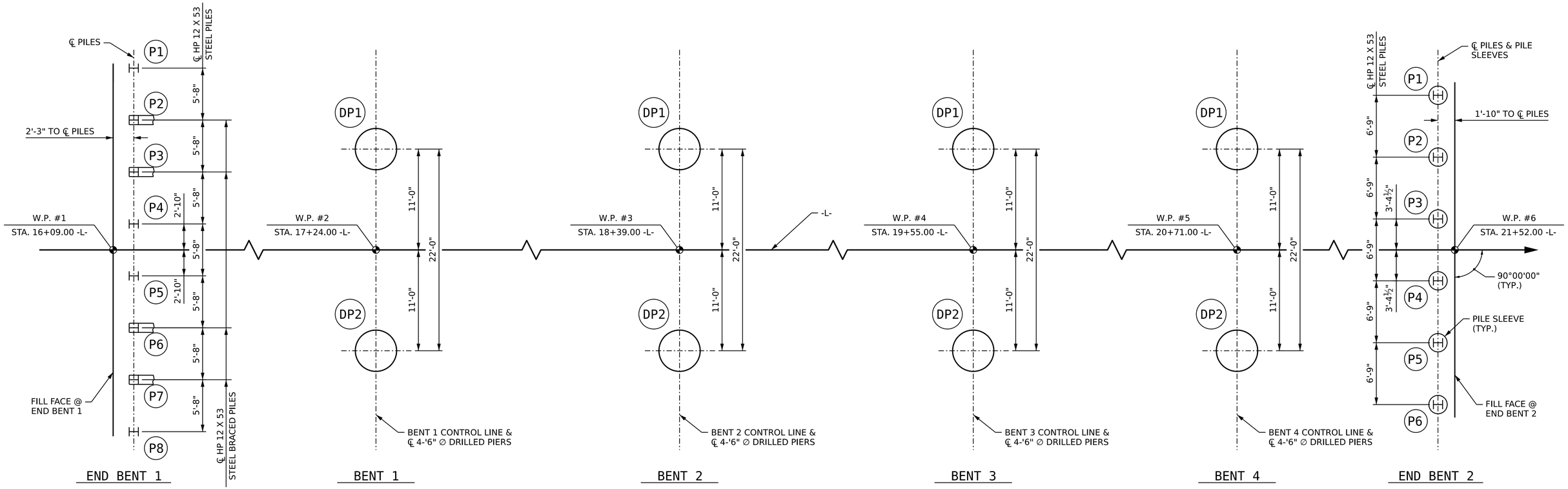

FOUNDATION LAYOUT

DIMENSIONS LOCATING PILES AND DRILLED PIERS ARE SHOWN TO PILE AND DRILLED PIER CENTERLINES.

ORIENT PILES AS SHOWN.

(##) - PILE OR DRILLED PIER NUMBER

NOTES:

FOR DRILLED PIERS, SEE SECTION 411 OF THE STANDARD SPECIFICATIONS.

DRILLED PIER EXCAVATIONS AT BENTS NO. 1 THROUGH 4 WILL EXTEND INTO MATERIAL THAT DETERIORATES WHEN EXPOSED TO THE ELEMENTS. CHECK FIELD CONDITIONS FOR THE REQUIRED TIP RESISTANCE AND PLACE CONCRETE IMMEDIATELY AFTER EXCAVATION IS COMPLETE.

FOR PILES, SEE SECTION 450 OF THE STANDARD SPECIFICATIONS.

OBSERVE A 1 MONTH WAITING PERIOD AFTER CONSTRUCTING THE ABUTMENT, END BENT, AND APPROACH FILL BEFORE BEGINNING APPROACH SLAB CONSTRUCTION AT END BENT NO. 1. FOR BRIDGE WAITING PERIODS, SEE ROADWAY PLANS AND SECTION 235 OF THE STANDARD SPECIFICATIONS.

INSTALL PILE SLEEVES BEFORE CONSTRUCTING THE MECHANICALLY STABILIZED EARTH (MSE) ABUTMENT WALL AT END BENT NO. 2. OBSERVE A ONE MONTH WAITING PERIOD AFTER CONSTRUCTING THE MSE ABUTMENT WALL TO WITHIN 1 FT OF THE BOTTOM OF CAP ELEVATION. THEN, INSTALL PILES THROUGH THE CORRUGATED STEEL PIPES AND FILL PIPES WITH LOOSE UNCOMPACTED SAND BEFORE CONSTRUCTING END BENT CAPS. FOR PILE SLEEVES, SEE MSE RETAINING WALL PLANS AND PROVISION. FOR BRIDGE WAITING PERIODS, SEE ROADWAY PLANS AND SECTION 235 OF THE STANDARD SPECIFICATIONS.

PROJECT NO. B-5716
ROCKINGHAM COUNTY
STATION: 18+80.50 -L-

SHEET 3 OF 5

PREPARED BY
MOTT MACDONALD
930 Main Campus Drive, Suite 200
Raleigh, NC 27606
(919) 553-2253
License No. F-0669
www.mottmac.com

NORTH CAROLINA PROFESSIONAL SEAL 043301 ENGINEER JOHNATHAN T. WILLIAMS
DocuSigned by: Johnathan T. Williams
27-Jun-2025

STATE OF NORTH CAROLINA
DEPARTMENT OF TRANSPORTATION
RALEIGH

GENERAL DRAWING

BRIDGE ON SR 1138 (LINDSEY BRIDGE RD.) OVER DAN RIVER AND NSRR BETWEEN SR 1194 AND SR 1143

REVISIONS						SHEET NO.
NO.	BY:	DATE:	NO.	BY:	DATE:	S01-03
1			3			TOTAL SHEETS
2			4			48

DOCUMENT NOT CONSIDERED FINAL UNLESS ALL SIGNATURES COMPLETED

DRAWN BY :	N. K. KAVANI	DATE :	8-2023
CHECKED BY :	J. T. WILLIAMS	DATE :	2-2024
DESIGN ENGINEER OF RECORD:	J. T. WILLIAMS	DATE :	2-2024

3/12/2025 9:24:49 AM
C:\Users\kcrawford\Documents\mmworking\mmworkspace\pw\wl57077\v0171488\401.005.B5716_SMU_FL_S01-03_780140.dgn
WL57077

Docusign Envelope ID: 94478B89-8910-4784-B75E-FFD00CC24A0F

SUMMARY OF PILE INFORMATION/INSTALLATION

(Blank entries indicate item is not applicable to structure)

End Bent/ Bent No, Pile(s) #(-#) (e.g., "Bent 1, Piles 1-5")	Factored Resistance per Pile TONS	Pile Cut-Off (Top of Pile) Elevation FT	Estimated Pile Length per Pile FT	Scour Critical Elevation FT	Driven Piles			Predrilling for Piles*			Drilled-In Piles		
					Min Pile Tip (Tip No Higher Than) Elev FT	Required Driving Resistance (RDR)** per Pile TONS	Total Pile Redrives Quantity EACH	Predrilling Length per Pile Lin FT	Predrilling Elevation (Elev Not To Predrill Below) FT	Maximum Predrilling Dia INCHES	Pile Excavation (Bottom of Hole) Elev FT	Pile Exc Not In Soil per Pile Lin FT	Pile Exc In Soil per Pile Lin FT
End Bent No. 1	110	580.81	45			187	8						
End Bent No. 2	115	596.57	25			196					570.0	4.0	9.0

*Predrilling for Piles is required for end bents/bents with a predrilling length and at the Contractor's option for end bents/bents with predrilling information but no predrilling length.

$$^{**}RDR = \frac{Factored\ Resistance + Factored\ Downdrag\ Load + Factored\ Dead\ Load}{Dynamic\ Resistance\ Factor} + Nominal\ Downdrag\ Resistance + \frac{Nominal\ Scour\ Resistance}{Scour\ Resistance\ Factor}$$

PILE DESIGN INFORMATION

(Blank entries indicate item is not applicable to structure)

End Bent/ Bent No, Pile(s) #(-#) (e.g., "Bent 1, Piles 1-5")	Factored Axial Load per Pile TONS	Factored Downdrag Load per Pile TONS	Factored Dead Load* per Pile TONS	Dynamic Resistance Factor	Nominal Downdrag Resistance per Pile TONS	Nominal Scour Resistance per Pile TONS	Scour Resistance Factor (Default = 1.00)
End Bent No. 1, Piles 1-8	110			0.60			1.00
End Bent No. 2, Piles 1-6	115			0.60			1.00

*Factored Dead Load is factored weight of pile above the ground line.

SUMMARY OF DRILLED PIER INFORMATION/INSTALLATION

(Blank entries indicate item is not applicable to structure)

End Bent/ Bent No, Pier(s) #(-#) (e.g., "Bent 1, Piers 1-3")	Factored Resistance per Pier TONS	Minimum Pier Tip (Tip No Higher Than) Elevation FT	Required Tip Resistance per Pier TSF	Scour Critical Elevation FT	Minimum Drilled Pier Penetration Into Rock per Pier Lin FT	Drilled Pier Length* per Pier Lin FT	Drilled Pier Length Not In Soil* per Pier Lin FT	Drilled Pier Length In Soil* per Pier Lin FT	Permanent Steel Casing Required? YES or MAYBE	Permanent Steel Casing Tip Elevation (Elev Not To Extend Casing Below) FT	Permanent Steel Casing Length** per Pier Lin FT
Bent 1, Piers 1-2	730	527.1	45	551			15.1	18.1			
Bent 2, Piers 1-2	750	523.2	65	532	8.0		17.8	3.4	YES	535.3	9.0
Bent 3, Piers 1-2	750	522.3	45	532	8.0		18.7	3.4	YES	535.3	9.0
Bent 4, Piers 1-2	645	562.9	35	N/A			14.6	0.0			
TOTAL QTY:							132.4	49.8			36.08

*Drilled Pier Length, Drilled Pier Length Not in Soil and Drilled Pier Length in Soil represent estimated drilled pier quantities and are measured and paid for as either "____ Dia. Drilled Piers" or "____ Dia. Drilled Piers Not in Soil" and "____ Dia. Drilled Piers in Soil" in accordance with Article 411-7 of the *NCDOT Standard Specifications* .

**Permanent Steel Casing Length equals the difference between the ground line or top of drilled pier elevation, whichever is higher, and the permanent casing tip elevation and is measured and paid for as "Permanent Steel Casting for ____ Dia. Drilled Pier" in accordance with Article 411-7 of the *NCDOT Standard Specifications* .

SUMMARY OF DYNAMIC PILE TESTING/PILE ORDER LENGTHS

(Blank entries indicate item is not applicable to structure)

Dynamic Pile Testing (DPT)				Pile Order Lengths	
End Bent/ Bent No	Dynamic Pile Testing Required? YES or MAYBE	Dynamic Pile Testing Test Pile Length FT	Total Dynamic Pile Testing Quantity EACH	End Bent/ Bent No(s)	Pile Order Length Basis* EST or Dynamic Pile Testing
End Bent No. 1, Piles 1-8	MAYBE	50	1		
End Bent No. 2, Piles 1-6	MAYBE	30			

*EST = Pile order lengths from estimated pile lengths. For groups of end bents/bents with pile order lengths based on dynamic pile testing, the first end bent/bent no. listed for each group is the representative end bent/bent with dynamic pile testing.

SUMMARY OF PILE ACCESSORIES

(Blank entries indicate item is not applicable to structure)

End Bent/ Bent No, Pile(s) #(-#) (e.g., "Bent 1, Piles 1-5")	Pipe Pile Plates Required? YES or MAYBE	Steel Pile Points			Steel Pile Tips Required? YES
		Pipe Pile Cutting Shoes Required? YES	Pipe Pile Conical Points Required? YES	H-Pile Points Required? YES	
End Bent No. 2, Piles 1-6				YES	
TOTAL QTY:				6	

SUMMARY OF DRILLED PIER TESTING

(Blank entries indicate item is not applicable to structure)

End Bent/ Bent No, Pier(s) #(-#) (e.g., "Bent 1, Piers 1-3")	Standard Penetration Test (SPT) Required? YES or MAYBE	Crosshole Sonic Logging (CSL) Required?* YES or MAYBE	Total CSL Tube Length (For All Tubes) per Pier Lin FT	Shaft Inspection Device (SID) Required? YES or MAYBE	Pile Integrity Test (PIT) Required? MAYBE
Bent 1, Piers 1-2	MAYBE	MAYBE	173.7	MAYBE	
Bent 2, Piers 1-2	MAYBE	MAYBE	113.4	MAYBE	
Bent 3, Piers 1-2	MAYBE	MAYBE	118.1	MAYBE	
Bent 4, Piers 1-2	MAYBE	MAYBE	80.5	MAYBE	
TOTAL QTY:			971.2		

*CSL Tubes are required if CSL Testing is or may be required. The number of CSL Tubes per drilled pier is equal to one tube per foot of design pier diameter with at least 4 tubes per pier. The length of each CSL Tube is equal to the drilled pier length plus 1.5 ft.

PROJECT NO. B-5716

Rockingham COUNTY

STATION: -L- 18+80.50

NOTES:

1. The Pile and Drilled Pier Foundation Tables are based on the bridge substructure design and foundation recommendations sealed by a North Carolina Professional Engineer (W. Scott Hunsberger, NC 36283) on 03/11/25.
2. Total Pile Driving Equipment Setup quantity (not shown in Pile Foundation Tables) equals the number of driven piles, i.e., the number of piles with a Required Driving Resistance.
3. The Engineer will determine the need for PDA Testing, Pipe Pile Plates, Permanent Steel Casing, SPTs, CSL Testing, SID Inspections and PITs when these items may be required.

NORTH CAROLINA PROFESSIONAL SEAL 043301 ENGINEER JOHN WILLIAMS

DocuSigned by: John Williams
27-Jun-2025

SIGNATURE DATE

DOCUMENT NOT CONSIDERED FINAL UNLESS ALL SIGNATURES COMPLETED

STATE OF NORTH CAROLINA
DEPARTMENT OF TRANSPORTATION
RALEIGH

PILE AND DRILLED PIER FOUNDATION TABLES

REVISIONS						
NO.	BY:	DATE:	NO.	BY:	DATE:	
1			3			
2			4			

SHEET NO. S01-04

TOTAL SHEETS 48

Mott MacDonald Restricted

Docusign Envelope ID: 94478B89-8910-4784-B75E-FFD00CC24A0F

BM 2, -L- STA. 21+64.65, 133.7' LT, BOLT AT "N" ON FIRE HYDRANT, ELEV. = 581.85

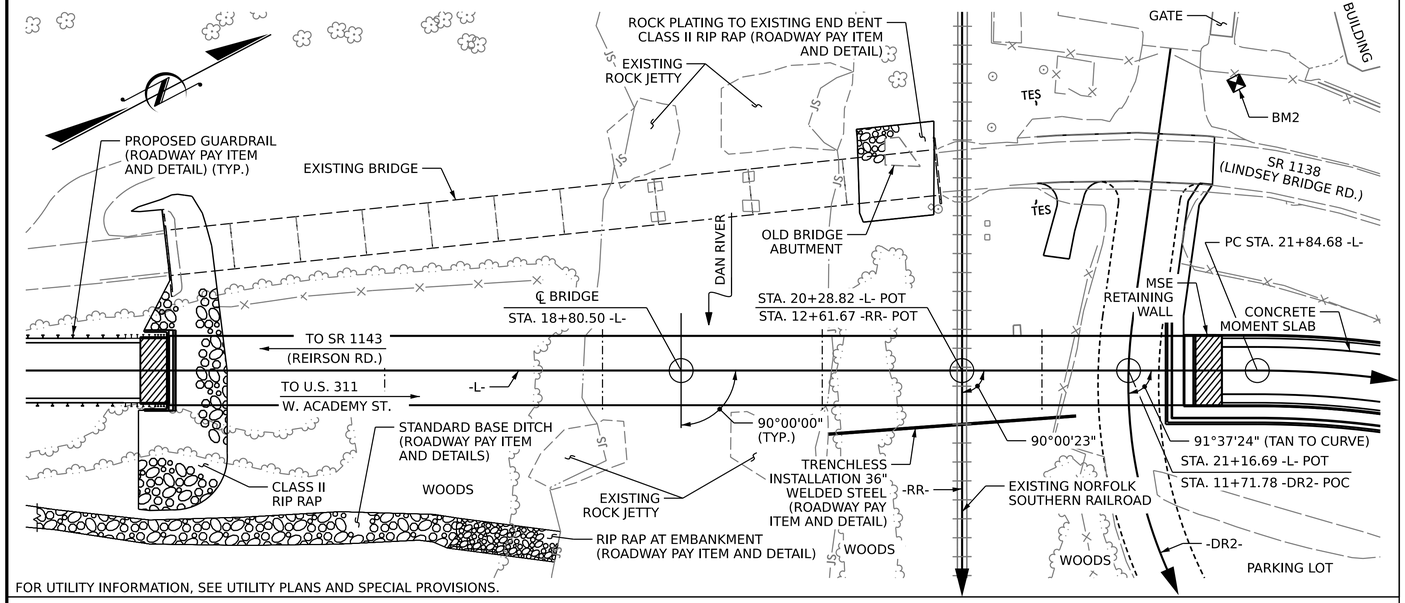

FOR UTILITY INFORMATION, SEE UTILITY PLANS AND SPECIAL PROVISIONS.

LOCATION SKETCH

NOTES:

ASSUMED LIVE LOAD = HL-93 OR ALTERNATE LOADING.

THIS BRIDGE HAS BEEN DESIGNED IN ACCORDANCE WITH THE REQUIREMENTS OF THE AASHTO LRFD BRIDGE DESIGN SPECIFICATIONS.

THIS BRIDGE IS LOCATED IN SEISMIC ZONE 1.

FOR OTHER DESIGN DATA AND GENERAL NOTES, SEE SHEET SN.

FOR SUBMITTAL OF WORKING DRAWINGS, SEE SPECIAL PROVISIONS.

FOR FALSEWORK AND FORMWORK, SEE SPECIAL PROVISIONS.

FOR CRANE SAFETY, SEE SPECIAL PROVISIONS.

FOR GROUT FOR STRUCTURES, SEE SPECIAL PROVISIONS.

THE CONTRACTOR SHALL PROVIDE INDEPENDENT ASSURANCE SAMPLES OF REINFORCING STEEL AS FOLLOWS: FOR PROJECTS REQUIRING UP TO 400 TONS OF REINFORCING STEEL, ONE 30 INCH SAMPLE OF EACH SIZE BAR USED, AND FOR PROJECTS REQUIRING OVER 400 TONS OF REINFORCING STEEL, TWO 30 INCH SAMPLES OF EACH SIZE BAR USED. THE SAMPLE BARS SHOULD COME FROM STEEL ACTUALLY USED IN THE PROJECT AND THE SAMPLE BARS SHOULD BE REPLACED BY SPLICED BARS AS SPECIFIED IN THE SAMPLE BAR REPLACEMENT CHART. PAYMENT FOR THE SAMPLE BARS AND REPLACEMENT REINFORCING STEEL SHALL BE CONSIDERED INCIDENTAL TO VARIOUS PAY ITEMS.

THE ELEVATIONS AND CLEARANCES SHOWN ON THE PLANS AT THE POINTS OF MINIMUM VERTICAL CLEARANCE ARE FROM THE BEST INFORMATION AVAILABLE. PRIOR TO BEGINNING BRIDGE CONSTRUCTION, VERIFY THE ELEVATIONS ON THE EXISTING PAVEMENT AND CHECK THE CLEARANCE. REPORT ANY VARIATIONS TO THE ENGINEER. ANY PLAN REVISIONS NECESSARY TO ACHIEVE THE REQUIRED MINIMUM VERTICAL CLEARANCE WILL BE PROVIDED BY THE DEPARTMENT.

FOR MAINTENANCE AND PROTECTION OF TRAFFIC BENEATH PROPOSED STRUCTURE, SEE SPECIAL PROVISIONS.

REMOVABLE FORMS MAY BE USED IN LIEU OF METAL STAY-IN-PLACE FORMS IN ACCORDANCE WITH ARTICLE 420-3 OF THE STANDARD SPECIFICATIONS.

NOTES:

THE RAILROAD TRACK TOP OF RAIL ELEVATIONS ON THE PLAN ARE FROM THE BEST INFORMATION AVAILABLE. PRIOR TO BEGINNING BRIDGE CONSTRUCTION, VERIFY THE TOP OF RAIL ELEVATIONS AND REPORT ANY VARIATIONS TO THE ENGINEER. ANY PLAN REVISIONS NECESSARY TO ACHIEVE THE REQUIRED MINIMUM CLEARANCE WILL BE PROVIDED BY THE DEPARTMENT.

NEEDLE BEAMS WILL NOT BE ALLOWED UNLESS OTHERWISE CALLED FOR ON THE PLANS OR APPROVED BY THE ENGINEER.

INASMUCH AS THE PAINT SYSTEM ON THE EXISTING STRUCTURAL STEEL CONTAINS LEAD, THE CONTRACTOR'S ATTENTION IS DIRECTED TO ARTICLE 107-1 OF THE STANDARD SPECIFICATIONS. ANY COSTS RESULTING FROM COMPLIANCE WITH APPLICABLE STATE OR FEDERAL REGULATIONS PERTAINING TO HANDLING OF MATERIALS CONTAINING LEAD BASED PAINT SHALL BE INCLUDED IN THE BID PRICE FOR "REMOVAL OF EXISTING STRUCTURE AT STATION 18+80.50 -L-."

THE CLASS AA CONCRETE IN THE BRIDGE DECK SHALL CONTAIN FLY ASH OR GROUND GRANULATED BLAST FURNACE SLAG AT THE SUBSTITUTION RATE SPECIFIED IN ARTICLE 1024-1 AND IN ACCORDANCE WITH ARTICLES 1024-5 AND 1024-6 OF THE STANDARD SPECIFICATIONS. NO PAYMENT WILL BE MADE FOR THIS SUBSTITUTION AS IT IS CONSIDERED INCIDENTAL TO THE COST OF THE REINFORCED CONCRETE DECK SLAB.

THE CONTRACTOR WILL BE REQUIRED TO CONSTRUCT, MAINTAIN AND AFTERWARDS REMOVE A TEMPORARY STRUCTURE AT STATION 18+80.50 -L- FOR USE DURING CONSTRUCTION OF THE PROPOSED STRUCTURE. FOR CONSTRUCTION, MAINTENANCE AND REMOVAL OF TEMPORARY ACCESS, SEE SPECIAL PROVISIONS.

THE EXISTING STRUCTURE CONSISTING OF 10 SPANS: 6 @ 35'-0" & 4 @ 50'-0"; 24'-0" CLEAR ROADWAY; REINFORCED CONCRETE DECK ON STEEL I-BEAMS; REINFORCED CONCRETE END BENTS & INTERIOR BENTS 1-5 ON PRESTRESSED PRECAST CONCRETE PILES AND REINFORCED CONCRETE POST & BEAM INTERIOR BENTS 6-9, LOCATED UPSTREAM OF THE PROPOSED STRUCTURE SITE SHALL BE REMOVED. THE EXISTING BRIDGE IS PRESENTLY POSTED FOR LOAD LIMIT. SHOULD THE STRUCTURAL INTEGRITY OF THE BRIDGE DETERIORATE DURING CONSTRUCTION OF THE PROPOSED BRIDGE, A LOAD LIMIT MAY BE REDUCED AS FOUND NECESSARY DURING THE LIFE OF THE PROJECT.

REMOVAL OF THE EXISTING BRIDGE SHALL BE PERFORMED IN A MANNER THAT PREVENTS DEBRIS FROM FALLING INTO THE WATER. THE CONTRACTOR SHALL SUBMIT DEMOLITION PLANS FOR REVIEW AND REMOVE THE BRIDGE IN ACCORDANCE WITH ARTICLE 402-2 OF THE STANDARD SPECIFICATIONS.

THIS STRUCTURE HAS BEEN DESIGNED IN ACCORDANCE WITH "HEC 18-EVALUATING SCOUR AT BRIDGES."

THE SCOUR CRITICAL ELEVATION FOR BENT(S) NO. 1 IS ELEVATION 551.0'. THE SCOUR CRITICAL ELEVATION FOR BENTS(S) NO. 2 & 3 IS ELEVATION 532.0'. SCOUR CRITICAL ELEVATIONS ARE USED TO MONITOR POSSIBLE SCOUR PROBLEMS DURING THE LIFE OF THE STRUCTURE.

FOR EROSION CONTROL MEASURES, SEE EROSION CONTROL PLANS.

THE LOCATION OF THE CONSTRUCTION JOINT IN THE DRILLED PIERS IS BASED ON AN APPROXIMATE GROUND LINE ELEVATION. IF THE CONSTRUCTION JOINT IS ABOVE THE ACTUAL GROUND ELEVATION, THE CONTRACTOR SHALL PLACE THE CONSTRUCTION JOINT 1 FT. BELOW THE GROUND LINE.

FOR ASBESTOS ASSESSMENT, SEE SPECIAL PROVISIONS.

TOTAL BILL OF MATERIAL

	CONST., MAINT., & REMOVAL OF TEMP ACCESS AT STATION 18+80.50 -L-	REMOVAL OF EXISTING STRUCTURE AT STATION 18+80.50 -L-	ASBESTOS ASSESSMENT	PILE EXCAVATION IN SOIL	PILE EXCAVATION NOT IN SOIL	4'-6" DIA DRILLED PIERS IN SOIL	4'-6" DIA DRILLED PIERS NOT IN SOIL	PERMANENT STEEL CASING FOR 4'-6" DIA. DRILLED PIER	SID INSPECTIONS	SPT TESTING	CSL TESTING	REINFORCED CONCRETE DECK SLAB	GROOVING BRIDGE FLOORS	CLASS A CONCRETE
	LUMP SUM	LUMP SUM	LUMP SUM	LIN. FT.	LIN. FT.	LIN. FT.	LIN. FT.	LIN. FT.	EA.	EA.	EA.	SQ. FT.	SQ. FT.	CU. YDS.
SUPERSTRUCTURE												19,786	17,585	
END BENT 1														43.7
BENT 1						36.2	30.2							53.1
BENT 2						6.8	35.6	18.0						73.7
BENT 3						6.8	37.4	18.0						77.4
BENT 4						0.0	29.2							47.7
END BENT 2				54.0	24.0									25.4
TOTAL	LUMP SUM	LUMP SUM	LUMP SUM	54.0	24.0	49.8	132.4	36.0	1	1	1	19,786	17,585	321.0

SAMPLE BAR REPLACEMENT

SIZE	LENGTH
#3	6'-2"
#4	7'-4"
#5	8'-6"
#6	9'-8"
#7	10'-10"
#8	12'-0"
#9	13'-2"
#10	14'-6"
#11	15'-10"

NOTE:
SAMPLE BAR REPLACEMENT LENGTHS BASED ON 30" (SAMPLE LENGTH) PLUS TWO SPLICE LENGTHS AND f = 60ksi.

	BRIDGE APPROACH SLABS	REINFORCING STEEL	SPIRAL COLUMN REINFORCING STEEL	FIB 54" PRESTRESSED CONCRETE GIRDERS		PILE DRIVING EQUIPMENT SETUP FOR HP 12 X 53 STEEL PILES	HP 12 X 53 STEEL PILES		STEEL PILE POINTS	PILE REDRIVES	DYNAMIC PILE TESTING	TWO BAR METAL RAIL	1'-2" X 2'-6" CONCRETE PARAPET	4" SLOPE PROTECTION	RIP RAP CLASS II (2'-0" THICK)	GEOTEXTILE FOR DRAINAGE	ELASTOMERIC BEARINGS	FOAM JOINT SEALS	ORNAMENTAL FENCE
	LUMP SUM	LBS.	LBS.	NO.	LIN. FT.	EA.	NO.	LIN. FT.	EA.	EA.	EA.	LIN. FT.	LIN. FT.	S.Y.	TONS	S.Y.	LUMP SUM	LUMP SUM	LIN. FT.
SUPERSTRUCTURE				20	2155.33							1104.13	1111.42				LUMP SUM	LUMP SUM	1106.17
END BENT 1		6,414				8	8	360							708	787			
BENT 1		17,235	3,363																
BENT 2		18,864	3,998																
BENT 3		19,784	4,325																
BENT 4		13,083	1,954																
END BENT 2		3,236				6	6	150	6					10					
TOTAL	LUMP SUM	78,616	13,640	20	2155.33	14	14	510	6	8	1	1104.13	1111.42	10	708	787	LUMP SUM	LUMP SUM	1106.17

PROJECT NO. B-5716
ROCKINGHAM COUNTY
STATION: 18+80.50 -L-

SHEET 5 OF 5

PREPARED BY
MOTT MACDONALD
930 Main Campus Drive, Suite 200
Raleigh, NC 27606
(919) 552-2253
License No. F-0669
www.mottmac.com

NORTH CAROLINA PROFESSIONAL SEAL 043301 ENGINEER JOHNATHAN T. WILLIAMS
CF88347B-B8A0-4E0A-A7A1-A0A0A0A0A0A0
27-Jun-2025

STATE OF NORTH CAROLINA
DEPARTMENT OF TRANSPORTATION
RALEIGH

GENERAL DRAWING

BRIDGE ON SR 1138 (LINDSEY BRIDGE RD.) OVER DAN RIVER AND NSRR BETWEEN SR 1194 AND SR 1143

REVISIONS						SHEET NO.
NO.	BY:	DATE:	NO.	BY:	DATE:	S01-05
1			3			TOTAL SHEETS
2			4			48

DRAWN BY : L. L. BLANKENSHIP DATE : 5-2023
CHECKED BY : J. T. WILLIAMS DATE : 3-2024
DESIGN ENGINEER OF RECORD: J. T. WILLIAMS DATE : 3-2024

DOCUMENT NOT CONSIDERED FINAL UNLESS ALL SIGNATURES COMPLETED

2/19/2025 8:50:58 AM
C:\Users\wilsonjt\Documents\Projects\WI157077\d017148\401_009_B5716_SMU_GD_S01-05_780140.dgn

Docusign Envelope ID: 94478B89-8910-4784-B75E-FFD00CC24A0F

LOAD AND RESISTANCE FACTOR RATING (LRFR) SUMMARY FOR PRESTRESSED CONCRETE GIRDERS

LOAD TYPE		VEHICLE	WEIGHT (W) (TONS)	CONTROLLING LOAD RATING (#)	MINIMUM RATING FACTORS (RF)	TONS = W x RF	STRENGTH I LIMIT STATE											SERVICE III LIMIT STATE						COMMENT NUMBER
								MOMENT					SHEAR						MOMENT					
							LIVE-LOAD FACTORS (γ LL)	DISTRIBUTION FACTORS (DF)	RATING FACTOR	SPAN	GIRDER LOCATION	DISTANCE FROM LEFT END OF SPAN (ft)	DISTRIBUTION FACTORS (DF)	RATING FACTOR	SPAN	GIRDER LOCATION	DISTANCE FROM LEFT END OF SPAN (ft)	LIVE-LOAD FACTORS (γ LL)	DISTRIBUTION FACTORS (DF)	RATING FACTOR	SPAN	GIRDER LOCATION	DISTANCE FROM LEFT END OF SPAN (ft)	
DESIGN LOAD		HL-93 (INVENTORY)	N/A	1	1.03	--	1.75	0.833	1.33	C/D	EL	57.1	0.948	1.09	C/D	I	10.9	0.80	0.833	1.03	C/D	EL	57.1	
		HL-93 (OPERATING)	N/A		1.45	--	1.35	0.833	1.73	C/D	EL	57.1	0.948	1.45	C/D	I	10.9	N/A	--	--	--	--	--	
		HS-20 (INVENTORY)	36.000	2	1.48	53.280	1.75	0.849	1.88	E	EL	39.0	0.948	1.55	C/D	I	10.9	0.80	0.833	1.48	C/D	EL	57.1	
		HS-20 (OPERATING)	36.000		2.04	73.440	1.35	0.849	2.43	E	EL	39.0	0.948	2.04	C/D	I	10.9	N/A	--	--	--	--	--	
LEGAL LOAD	SINGLE VEHICLE (SV)	SNSH	13.500		3.58	48.330	1.40	0.849	5.36	E	EL	39.0	0.948	5.04	C/D	I	10.9	0.80	0.833	3.58	C/D	EL	57.1	
		SNGARBS2	20.000		2.56	51.200	1.40	0.849	3.97	E	EL	39.0	0.948	3.48	C/D	I	10.9	0.80	0.833	2.56	C/D	EL	57.1	
		SNAGRIS2	22.000		2.39	52.580	1.40	0.849	3.74	E	EL	39.0	0.948	3.20	C/D	I	10.9	0.80	0.833	2.39	C/D	EL	57.1	
		SNCOTTS3	27.250		1.78	48.505	1.40	0.849	2.67	E	EL	39.0	0.948	2.45	C/D	I	10.9	0.80	0.833	1.78	C/D	EL	57.1	
		SNAGGRS4	34.925		1.45	50.641	1.40	0.849	2.22	E	EL	39.0	0.948	1.97	C/D	I	10.9	0.80	0.833	1.45	C/D	EL	57.1	
		SNS5A	35.550		1.42	50.481	1.40	0.849	2.17	E	EL	39.0	0.948	1.97	C/D	I	10.9	0.80	0.833	1.42	C/D	EL	57.1	
		SNS6A	39.950		1.28	51.136	1.40	0.849	1.99	E	EL	39.0	0.948	1.77	C/D	I	10.9	0.80	0.833	1.28	C/D	EL	57.1	
		SNS7B	42.000		1.22	51.240	1.40	0.849	1.89	E	EL	39.0	0.948	1.71	C/D	I	10.9	0.80	0.833	1.22	C/D	EL	57.1	
	TRUCK TRACTOR SEMI-TRAILER (TTST)	TNAGRIT3	33.000		1.56	51.480	1.40	0.849	2.42	E	EL	39.0	0.948	2.14	C/D	I	10.9	0.80	0.833	1.56	C/D	EL	57.1	
		TNT4A	33.075		1.56	51.597	1.40	0.849	2.43	E	EL	39.0	0.948	2.10	C/D	I	10.9	0.80	0.833	1.56	C/D	EL	57.1	
		TNT6A	41.600		1.26	52.416	1.40	0.849	1.98	E	EL	39.0	0.948	1.79	C/D	I	10.9	0.80	0.833	1.26	C/D	EL	57.1	
		TNT7A	42.000		1.26	52.920	1.40	0.849	1.99	E	EL	39.0	0.948	1.76	C/D	I	10.9	0.80	0.833	1.26	C/D	EL	57.1	
		TNT7B	42.000		1.29	54.180	1.40	0.849	2.05	E	EL	39.0	0.948	1.68	C/D	I	10.9	0.80	0.833	1.29	C/D	EL	57.1	
		TNAGRIT4	43.000		1.24	53.320	1.40	0.849	1.96	E	EL	39.0	0.948	1.63	C/D	I	10.9	0.80	0.833	1.24	C/D	EL	57.1	
		TNAGT5A	45.000	3	1.17	52.650	1.40	0.849	1.85	E	EL	39.0	0.948	1.60	C/D	I	10.9	0.80	0.833	1.17	C/D	EL	57.1	
		TNAGT5B	45.000	3	1.17	52.650	1.40	0.849	1.83	E	EL	39.0	0.948	1.55	C/D	I	10.9	0.80	0.833	1.17	C/D	EL	57.1	
EMERGENCY VEHICLE (EV)		EV2	28.750		1.80	51.750	1.30	0.849	3.02	E	EL	39.0	0.948	2.59	C/D	I	10.9	0.80	0.833	1.80	C/D	EL	57.1	
		EV3	43.000	4	1.19	51.170	1.30	0.849	1.98	E	EL	39.0	0.948	1.71	C/D	I	10.9	0.80	0.833	1.19	C/D	EL	57.1	

LOAD FACTORS:

DESIGN LOAD RATING FACTORS	LIMIT STATE	γ DC	γ DW
	STRENGTH I	1.25	1.50
	SERVICE III	1.00	1.00

NOTES:

MINIMUM RATING FACTORS ARE BASED ON THE STRENGTH I AND SERVICE III LIMIT STATES.

ALLOWABLE STRESSES FOR SERVICE III LIMIT STATE ARE AS REQUIRED FOR DESIGN.

COMMENTS:

1.

2.

3.

4.

CONTROLLING LOAD RATING
1 DESIGN LOAD RATING (HL-93)
2 DESIGN LOAD RATING (HS-20)
3 LEGAL LOAD RATING * *
4 EMERGENCY VEHICLE LOAD RATING **
* * SEE CHART FOR VEHICLE TYPE
GIRDER LOCATION
I - INTERIOR GIRDER
EL - EXTERIOR LEFT GIRDER
ER - EXTERIOR RIGHT GIRDER

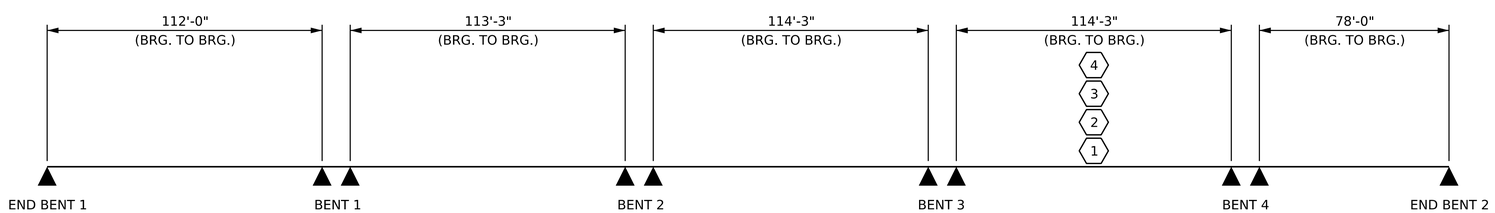

LRFR SUMMARY

PROJECT NO. B-5716
ROCKINGHAM COUNTY
STATION: 18+80.50 -L-

PREPARED BY
MOTT MACDONALD
930 Main Campus Drive, Suite 200
Raleigh, NC 27606
(919) 552-2233
License No. F-0669
www.mottmac.com

NORTH CAROLINA PROFESSIONAL SEAL 043301 ENGINEER JOHN T. WILLIAMS
CF88346B5D5A4F...
27-Jun-2025

STATE OF NORTH CAROLINA
DEPARTMENT OF TRANSPORTATION
RALEIGH

STANDARD
LRFR SUMMARY FOR PRESTRESSED CONCRETE GIRDERS
(NON-INTERSTATE TRAFFIC)

REVISIONS						SHEET NO.
NO.	BY:	DATE:	NO.	BY:	DATE:	S01-06
1			3			TOTAL SHEETS
2			4			48

DOCUMENT NOT CONSIDERED FINAL UNLESS ALL SIGNATURES COMPLETED

DRAWN BY : J. C. SCOLLON DATE : 8-2023
CHECKED BY : J. M. ROBINSON DATE : 3-2024
DESIGN ENGINEER OF RECORD: J. T. WILLIAMS DATE : 8-2023

12/15/2024 4:41:53 PM
R:\Structures\BRC_01_780140\Plans\401_011_B5716_SMU_LRFR_S01-06_780140.dgn
KAVI06794

Docusign Envelope ID: 94478B89-8910-4784-B75E-FFD00CC24A0F

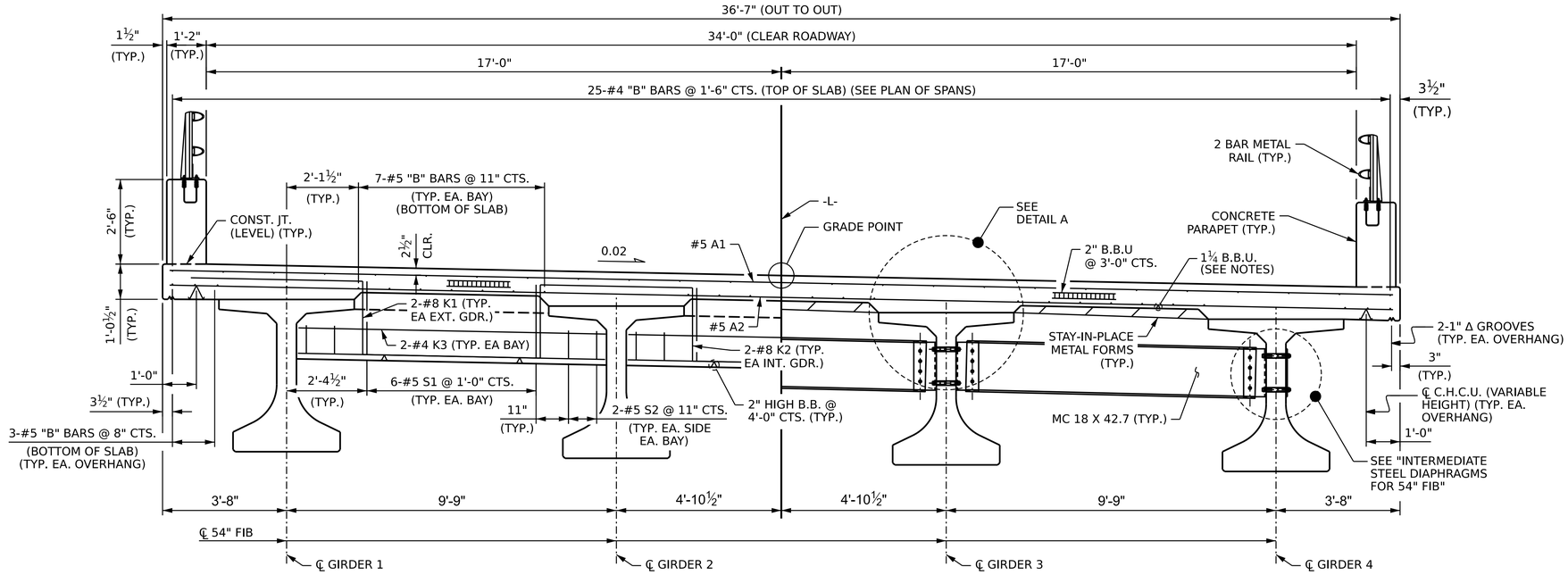

HALF TYPICAL SECTION

SHOWING END BENT DIAPHRAGMS

HALF TYPICAL SECTION

SHOWING INTERMEDIATE DIAPHRAGMS

TYPICAL SECTION

ORNAMENTAL FENCE NOT SHOWN FOR CLARITY

NOTES:

FOR NOTES, SEE SHEET 2 OF 2.

ORNAMENTAL FENCE SHALL BE MOUNTED TO EXTERIOR OF PARAPET. FOR ORNAMENTAL FENCE DETAILS SEE "ORNAMENTAL FENCE" SHEET.

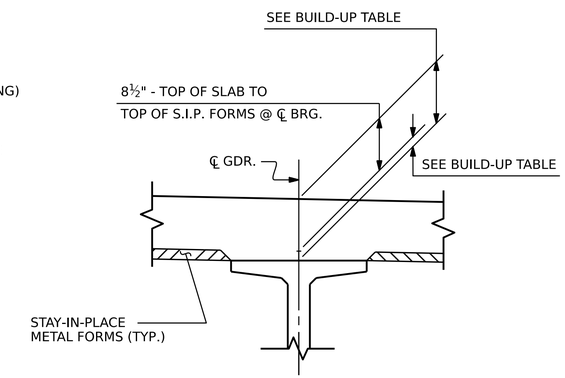

DETAIL A

BUILD-UP TABLE

	@ ℄ BRG.	* MAX @ MID-SPAN	TOP OF SLAB TO TOP OF PREST. CONC. GDR. AT ℄ BRG.
SPANS A & B	3½"	2¼" @ GDR. 2	1'-0"
SPANS C & D	2"	5⅞" @ GDR. 2	10½"
SPAN E	2"	3 9/16" @ GDR. 2	10½"

*BASED ON PREDICTED FINAL CAMBER AND THEORETICAL GRADE LINE ELEVATIONS.

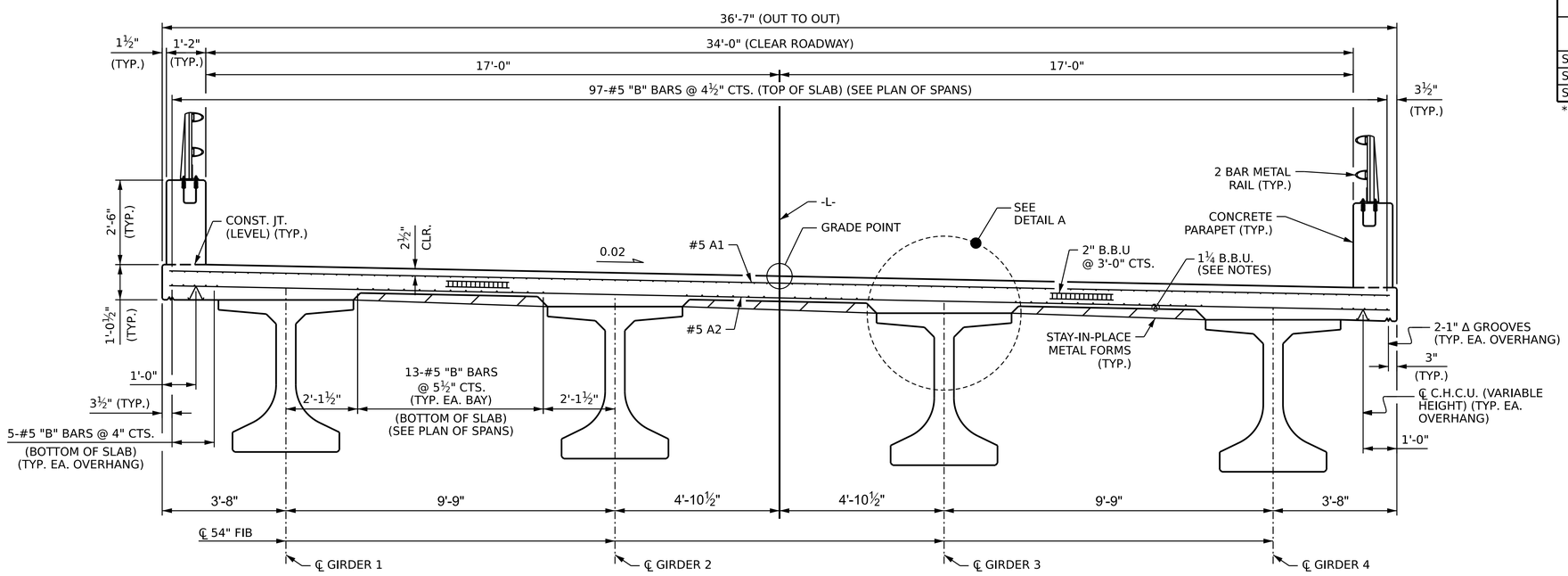

TYPICAL SECTION

SHOWING LINK SLAB SECTION @ BENT

ORNAMENTAL FENCE NOT SHOWN FOR CLARITY

PROJECT NO. B-5716

ROCKINGHAM COUNTY

STATION: 18+80.50 -L-

SHEET 1 OF 2

PREPARED BY

MOTT MACDONALD

930 Main Campus Drive, Suite 200, Raleigh, NC 27606 (919) 533-2233 License No. F-0669 www.mottmac.com

NORTH CAROLINA PROFESSIONAL SEAL 043301 ENGINEER JOHN T. WILLIAMS

DocuSigned by: John T. Williams 27-Jun-2024

STATE OF NORTH CAROLINA

DEPARTMENT OF TRANSPORTATION

RALEIGH

SUPERSTRUCTURE

TYPICAL SECTION

REVISIONS								SHEET NO.
NO.	BY:	DATE:	NO.	BY:	DATE:			S01-07
1			3					TOTAL SHEETS
2			4					48

DOCUMENT NOT CONSIDERED FINAL UNLESS ALL SIGNATURES COMPLETED

DRAWN BY :	L. L. BLANKENSHIP	DATE :	7-2023
CHECKED BY :	J. T. WILLIAMS	DATE :	3-2024
DESIGN ENGINEER OF RECORD:	J. T. WILLIAMS	DATE :	3-2024

12/16/2024 4:41:55 PM
R:\Structures\Bridges\B5716_01_780140\Plans\401_013_B5716_SMU_TS_S01-07_780140.dgn
KAVI06794

Docusign Envelope ID: 94478B89-8910-4784-B75E-FFD00CC24A0F

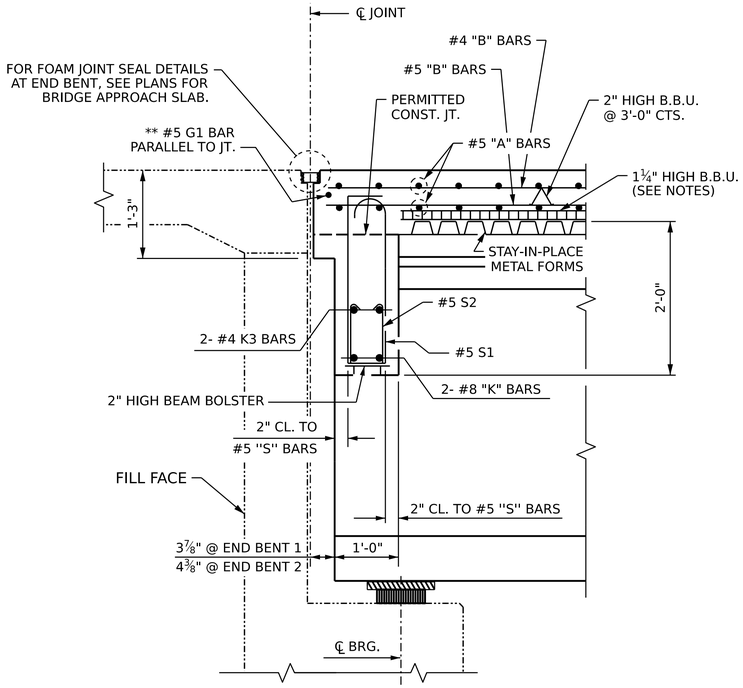

SECTION THRU END BENT DIAPHRAGM

** #5 G1 BAR MAY BE SHIFTED SLIGHTLY, AS NECESSARY, TO CLEAR REINFORCING STEEL AND STIRRUPS.

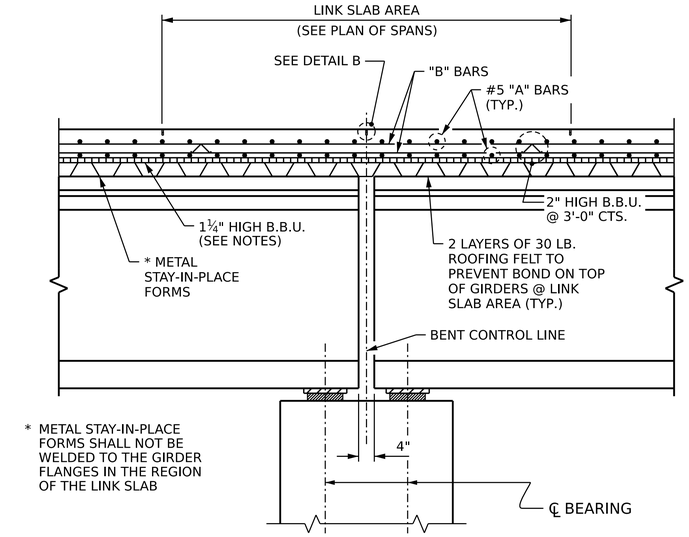

* METAL STAY-IN-PLACE FORMS SHALL NOT BE WELDED TO THE GIRDER FLANGES IN THE REGION OF THE LINK SLAB

SECTION @ LINK SLAB

NOTES:

PROVIDE 1¼" HIGH BEAM BOLSTERS UPPER AT 4'-0" CTS. ATOP THE METAL STAY-IN-PLACE FORMS TO SUPPORT THE BOTTOM MAT OF "A" BARS. WHEN USING REMOVABLE FORMS, PROVIDE CONTINUOUS HIGH CHAIRS FOR METAL DECK (C.H.C.M) @ 4'-0" CTS. WITH A HEIGHT TO SUPPORT THE BOTTOM MAT OF "A" BARS A CLEAR DISTANCE OF 2½" ABOVE THE REMOVABLE FORM.

LONGITUDINAL STEEL MAY BE SHIFTED SLIGHTLY, AS NECESSARY, TO AVOID INTERFERENCE WITH STIRRUPS IN PRESTRESSED CONCRETE GIRDERS.

PREVIOUSLY CAST CONCRETE IN A CONTINUOUS UNIT SHALL HAVE ATTAINED A MINIMUM COMPRESSIVE STRENGTH OF 3,000 PSI BEFORE ADDITIONAL CONCRETE IS CAST IN THE UNIT.

CONCRETE PARAPET IN A CONTINUOUS UNIT SHALL NOT BE CAST UNTIL ALL SLAB CONCRETE IN THE UNIT HAS BEEN CAST AND HAS REACHED A MINIMUM COMPRESSIVE STRENGTH OF 3,000 PSI.

FOR INTERMEDIATE STEEL DIAPHRAGMS DETAILS, SEE "INTERMEDIATE STEEL DIAPHRAGMS FOR 54" FIB" SHEET.

METAL STAY-IN-PLACE FORMS SHALL NOT BE WELDED TO THE SUPPORT ANGLES WITHIN THE LINK SLAB AREAS. SEE "PLAN OF SPANS" SHEETS FOR LOCATION.

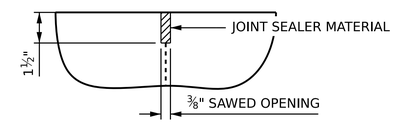

DETAIL B

A 1½" DEEP ⅜" WIDE CONTRACTION JOINT AT BENT CONROL LINE SHALL BE SAWN WITHIN 24 HOURS OF POURING THE DECK. THE JOINT SHALL BE FILLED WITH JOINT SEALER MATERIAL. THE JOINT SEALER MATERIAL SHALL CONFORM TO THE REQUIREMENTS OF SECTION 1028-3 OF THE STANDARD SPECIFICATIONS.

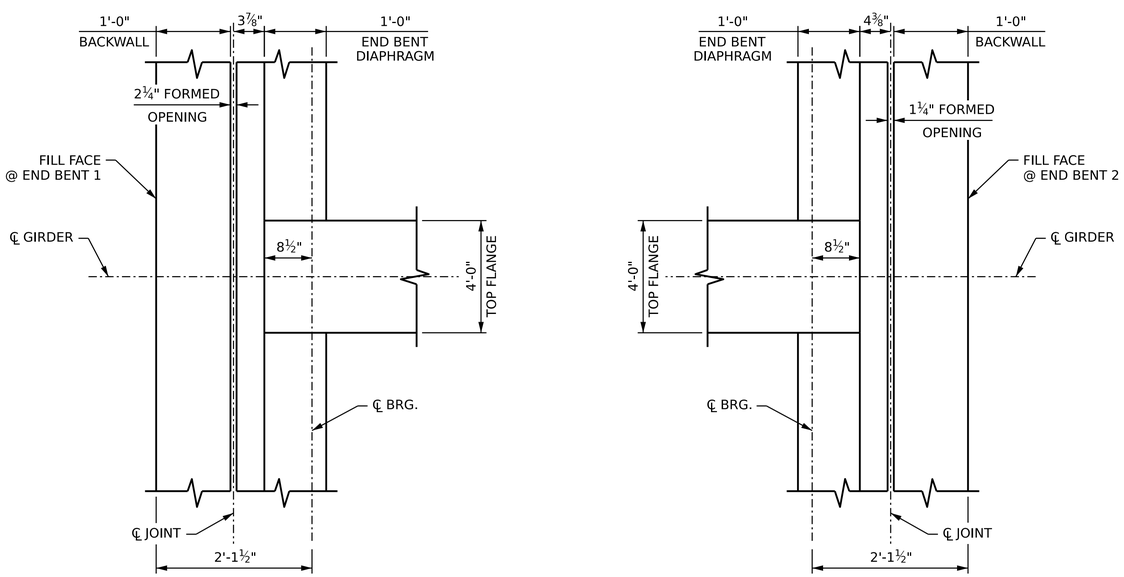

PLAN VIEW OF DIAPHRAGM @ END BENTS

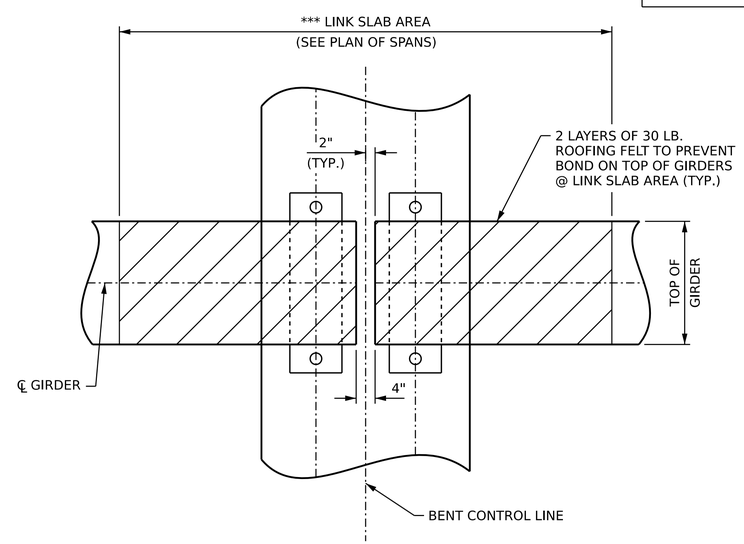

PLAN @ BENT

*** THE TOP OF THE GIRDER IN THE LINK SLAB AREA SHALL BE SMOOTH (NOT RAKED) AND FREE OF STIRRUPS, ANCHOR STUDS, DECK FORMWORK ATTACHMENTS, AND OVERHANG FALSEWORK/FORMWORK ATTACHMENTS.

PROJECT NO. B-5716
ROCKINGHAM COUNTY
STATION: 18+80.50 -L-

SHEET 2 OF 2

PREPARED BY
MOTT MACDONALD
930 Main Campus Drive, Suite 200
Raleigh, NC 27606
(919) 553-2253
License No. F-0669
www.mottmac.com

NORTH CAROLINA PROFESSIONAL SEAL 043301 ENGINEER JONATHAN T. WILLIAMS
DocuSigned by: Jonathan T. Williams
27-Jun-2025

STATE OF NORTH CAROLINA
DEPARTMENT OF TRANSPORTATION
RALEIGH

SUPERSTRUCTURE

TYPICAL SECTION DETAILS

REVISIONS						SHEET NO.
NO.	BY:	DATE:	NO.	BY:	DATE:	S01-08
1			3			TOTAL SHEETS
2			4			48

DRAWN BY : L. L. BLANKENSHIP DATE : 8-2023
CHECKED BY : J. T. WILLIAMS DATE : 2-2024
DESIGN ENGINEER OF RECORD: J. T. WILLIAMS DATE : 2-2024

DOCUMENT NOT CONSIDERED FINAL UNLESS ALL SIGNATURES COMPLETED

12/16/2024 4:41:56 PM
R:\Structures\BRC_01_780140\Plans\401_015_B5716_SMU_TS_S01-08_780140.dgn
KAVI06794

Docusign Envelope ID: 94478B89-8910-4784-B75E-FFD00CC24A0F

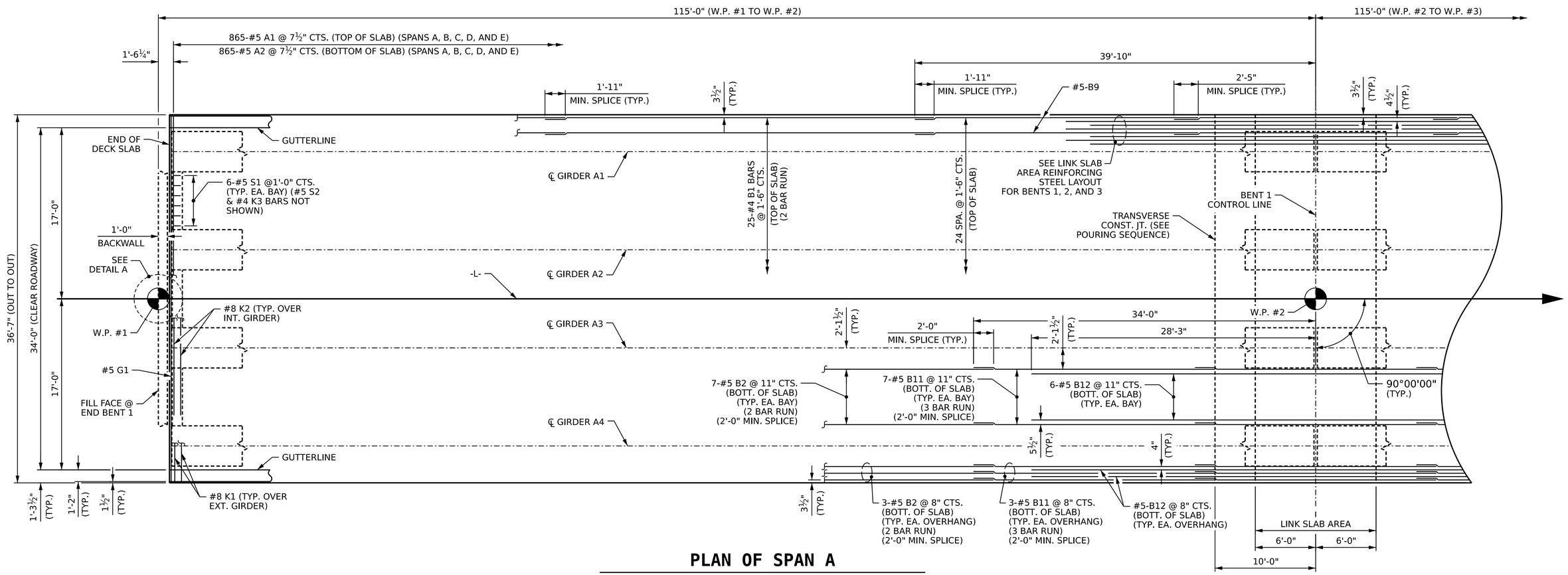

PLAN OF SPAN A

FOR POUR SEQUENCE AND TRANSVERSE CONSTRUCTION JOINT DETAIL, SEE "SUPERSTRUCTURE BILL OF MATERIAL" SHEET.

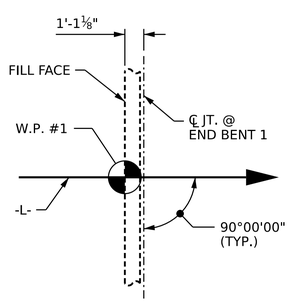

DETAIL A

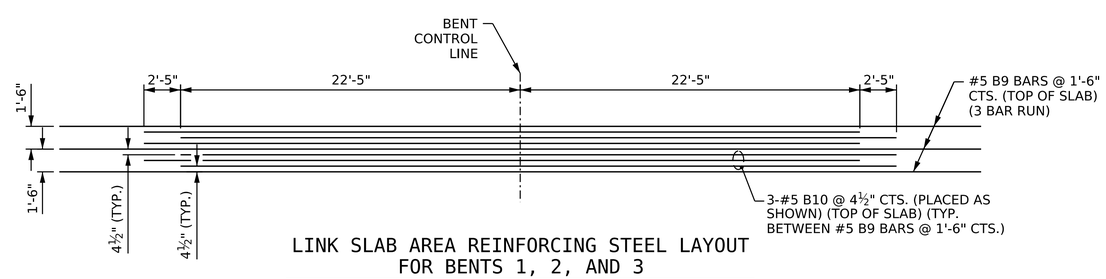

LINK SLAB AREA REINFORCING STEEL LAYOUT FOR BENTS 1, 2, AND 3

TOP OF SLAB "B" BARS SHOWN
BAR SPLICES NOT SHOWN

PROJECT NO. B-5716
ROCKINGHAM COUNTY
STATION: 18+80.50 -L-

SHEET 1 OF 5

PREPARED BY
MOTT MACDONALD
930 Main Campus Drive, Suite 200
Raleigh, NC 27606
(919) 552-2333
License No. F-0669
www.mottmac.com

NORTH CAROLINA PROFESSIONAL SEAL 043301 ENGINEER JOHNATHAN T. WILLIAMS
27-Jun-2025

STATE OF NORTH CAROLINA
DEPARTMENT OF TRANSPORTATION
RALEIGH

SUPERSTRUCTURE

PLAN OF SPAN A

REVISIONS								SHEET NO.
NO.	BY:	DATE:	NO.	BY:	DATE:			S01-09
1			3					TOTAL SHEETS
2			4					48

DOCUMENT NOT CONSIDERED FINAL UNLESS ALL SIGNATURES COMPLETED

DRAWN BY :	L. L. BLANKENSHIP	DATE :	7-2023
CHECKED BY :	J. T. WILLIAMS	DATE :	2-2024
DESIGN ENGINEER OF RECORD:	J. T. WILLIAMS	DATE :	2-2024

12/15/2024 4:41:58 PM
R:\Structures\B-5716_SMU_S_S01-09_780140.dgn
KAVI06794

Docusign Envelope ID: 94478B89-8910-4784-B75E-FFD00CC24A0F

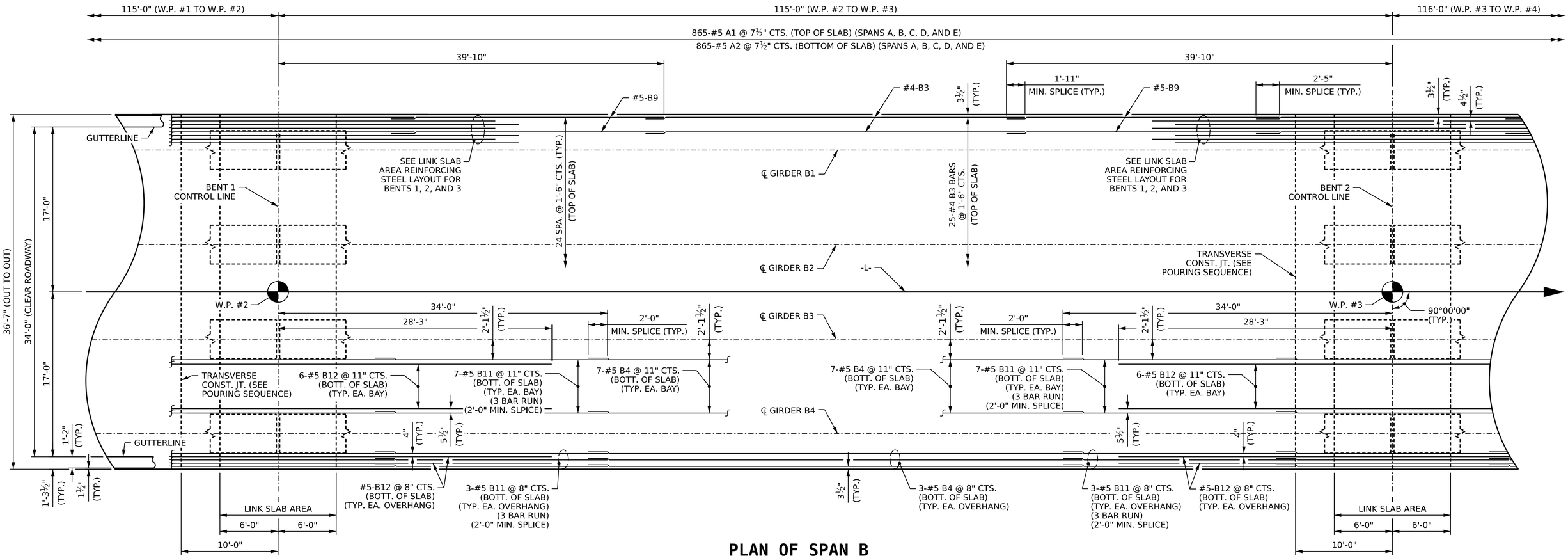

PLAN OF SPAN B

FOR POUR SEQUENCE AND TRANSVERSE CONSTRUCTION JOINT DETAIL, SEE "SUPERSTRUCTURE BILL OF MATERIAL" SHEET.

PROJECT NO. B-5716

ROCKINGHAM COUNTY

STATION: 18+80.50 -L-

SHEET 2 OF 5

PREPARED BY

MOTT MACDONALD

930 Main Campus Drive, Suite 200
Raleigh, NC 27606
(919) 553-2253
License No. F-0669
www.mottmac.com

NORTH CAROLINA PROFESSIONAL SEAL 043301 ENGINEER JOHNATHAN T. WILLIAMS

27-Jun-2024

STATE OF NORTH CAROLINA
DEPARTMENT OF TRANSPORTATION
RALEIGH

SUPERSTRUCTURE

PLAN OF SPAN B

REVISIONS						SHEET NO.
NO.	BY:	DATE:	NO.	BY:	DATE:	S01-10
1			3			TOTAL SHEETS
2			4			48

DOCUMENT NOT CONSIDERED FINAL UNLESS ALL SIGNATURES COMPLETED

DRAWN BY :	L. L. BLANKENSHIP	DATE :	8-2023
CHECKED BY :	J. T. WILLIAMS	DATE :	2-2024
DESIGN ENGINEER OF RECORD:	J. T. WILLIAMS	DATE :	2-2024

12/16/2024 4:46:00 PM
R:\Structures\B6200_01_B5716\Plans\401_019_B5716_SMU_S_S01-10_180140.dgn
KAV06794

Docusign Envelope ID: 94478B89-8910-4784-B75E-FFD00CC24A0F

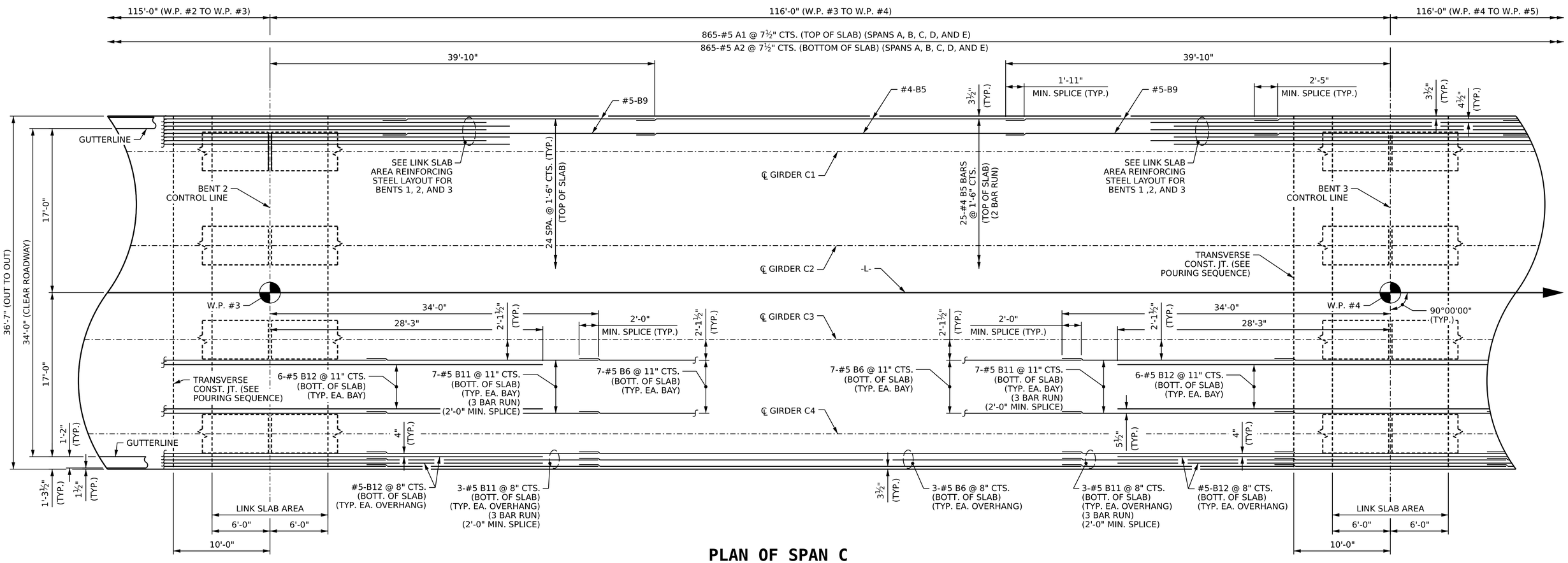

PLAN OF SPAN C

FOR POUR SEQUENCE AND TRANSVERSE CONSTRUCTION JOINT DETAIL, SEE "SUPERSTRUCTURE BILL OF MATERIAL" SHEET.

PROJECT NO. B-5716

ROCKINGHAM COUNTY

STATION: 18+80.50 -L-

SHEET 3 OF 5

PREPARED BY

MOTT MACDONALD
930 Main Campus Drive, Suite 200
Raleigh, NC 27606
(919) 532-2232
License No. F-0669
www.mottmac.com

NORTH CAROLINA PROFESSIONAL SEAL 043301 PROFESSIONAL ENGINEER J. TRAVIS WILLIAMS
DocuSigned by: 27-Jun-2024

STATE OF NORTH CAROLINA
DEPARTMENT OF TRANSPORTATION
RALEIGH

SUPERSTRUCTURE

PLAN OF SPAN C

REVISIONS						SHEET NO.
NO.	BY:	DATE:	NO.	BY:	DATE:	S01-11
1			3			TOTAL SHEETS
2			4			48

DOCUMENT NOT CONSIDERED FINAL UNLESS ALL SIGNATURES COMPLETED

DRAWN BY :	L. L. BLANKENSHIP	DATE :	8-2023
CHECKED BY :	J. T. WILLIAMS	DATE :	2-2024
DESIGN ENGINEER OF RECORD:	J. T. WILLIAMS	DATE :	2-2024

12/16/2024 4:42:02 PM
R:\Structures\BRC_01_780140\Plans\401_021_B5716_SMU_S_S01-11_780140.dgn
KAYT06794

Docusign Envelope ID: 94478B89-8910-4784-B75E-FFD00CC24A0F

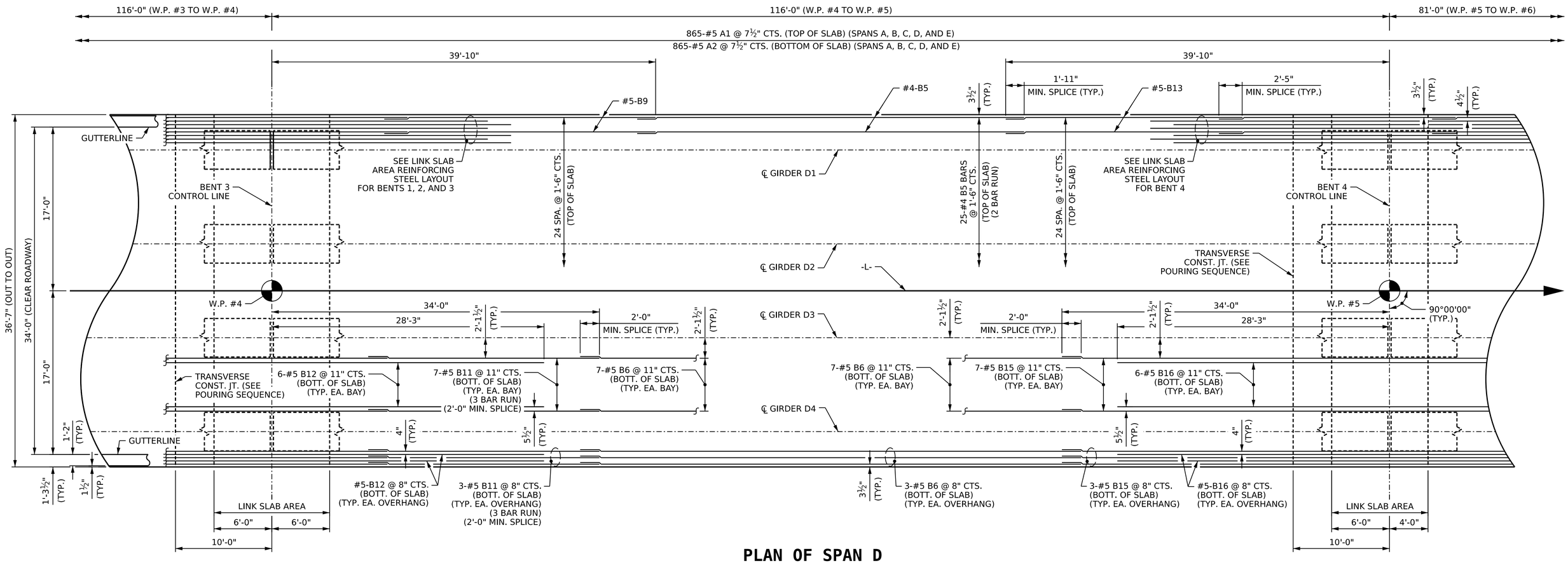

PLAN OF SPAN D

FOR POUR SEQUENCE AND TRANSVERSE CONSTRUCTION JOINT DETAIL, SEE "SUPERSTRUCTURE BILL OF MATERIAL" SHEET.

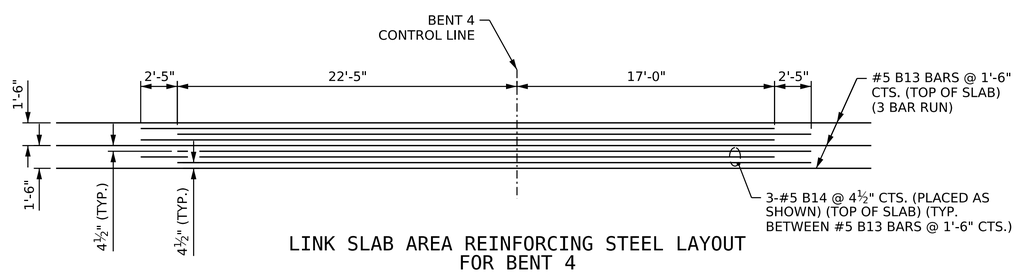

LINK SLAB AREA REINFORCING STEEL LAYOUT FOR BENT 4

TOP OF SLAB "B" BARS SHOWN

PROJECT NO. B-5716

ROCKINGHAM COUNTY

STATION: 18+80.50 -L-

SHEET 4 OF 5

PREPARED BY

MOTT MACDONALD

930 Main Campus Drive, Suite 200
Raleigh, NC 27606
(919) 233-2253
License No. F-0669
www.mottmac.com

NORTH CAROLINA PROFESSIONAL SEAL 043301 ENGINEER JONATHAN T. WILLIAMS

Jonathan T. Williams
DocuSigned by:
C7B8B1B6C0B8...
27-Jun-2024

STATE OF NORTH CAROLINA
DEPARTMENT OF TRANSPORTATION
RALEIGH

SUPERSTRUCTURE

PLAN OF SPAN D

REVISIONS						
NO.	BY:	DATE:	NO.	BY:	DATE:	
1			3			
2			4			

SHEET NO. S01-12

TOTAL SHEETS 48

DOCUMENT NOT CONSIDERED FINAL UNLESS ALL SIGNATURES COMPLETED

DRAWN BY :	L. L. BLANKENSHIP	DATE :	8-2023
CHECKED BY :	J. T. WILLIAMS	DATE :	2-2024
DESIGN ENGINEER OF RECORD:	J. T. WILLIAMS	DATE :	2-2024

12/16/2024 4:40:23 PM
R:\Structures\Bridges\B-5716_Rockingham_Co\Roadway\Design\B-5716_SMU_S_S01-12_780140.dgn
KAVI06794

Docusign Envelope ID: 94478B89-8910-4784-B75E-FFD00CC24A0F

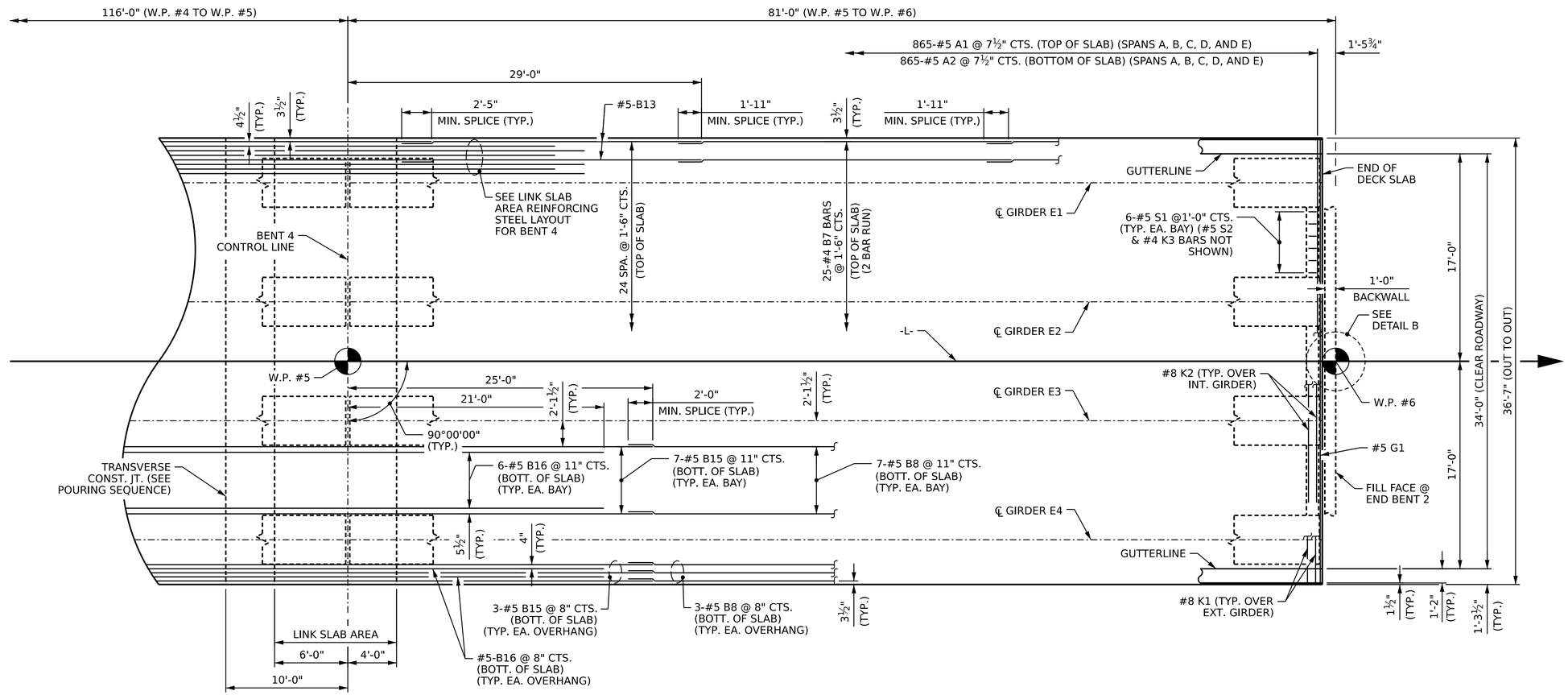

PLAN OF SPAN E

FOR POUR SEQUENCE AND TRANSVERSE CONSTRUCTION JOINT DETAIL, SEE "SUPERSTRUCTURE BILL OF MATERIAL" SHEET.

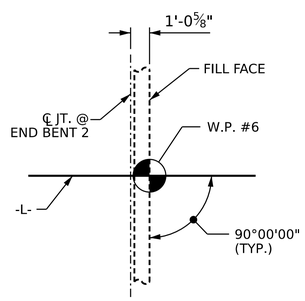

DETAIL B

PROJECT NO. B-5716

ROCKINGHAM COUNTY

STATION: 18+80.50 -L-

SHEET 5 OF 5

PREPARED BY

MOTT MACDONALD

930 Main Campus Drive, Suite 200
Raleigh, NC 27606
(919) 532-2253
License No. F-0669
www.mottmac.com

NORTH CAROLINA PROFESSIONAL SEAL 043301 ENGINEER JOSHUA T. WILLIAMS

CFB6E8A0D0A4A4...
27-Jun-2024

STATE OF NORTH CAROLINA
DEPARTMENT OF TRANSPORTATION
RALEIGH

SUPERSTRUCTURE

PLAN OF SPAN E

REVISIONS								SHEET NO.
NO.	BY:	DATE:	NO.	BY:	DATE:			S01-13
1			3					TOTAL SHEETS
2			4					48

DOCUMENT NOT CONSIDERED FINAL UNLESS ALL SIGNATURES COMPLETED

DRAWN BY :	L. L. BLANKENSHIP	DATE :	8-2023
CHECKED BY :	J. T. WILLIAMS	DATE :	2-2024
DESIGN ENGINEER OF RECORD:	J. T. WILLIAMS	DATE :	2-2024

12/16/2024 4:46:25 PM
R:\Structures\B16.01.80140\Plans\401_025_B5716_SMU_S_S01-13_780140.dgn
KAV06794

Docusign Envelope ID: 94478B89-8910-4784-B75E-FFD00CC24A0F

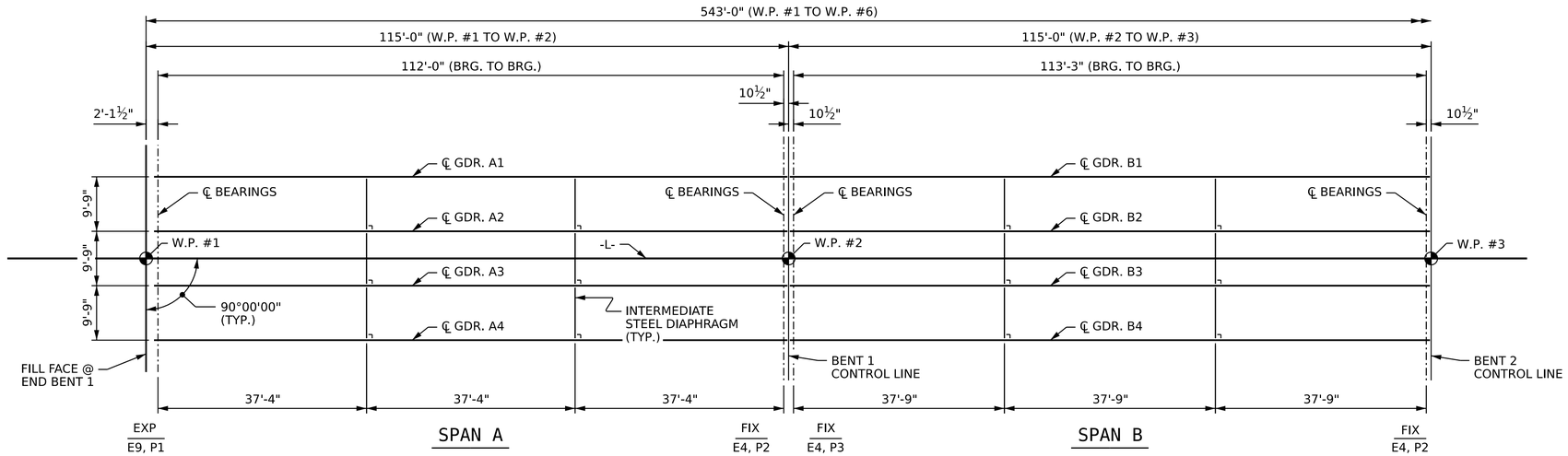

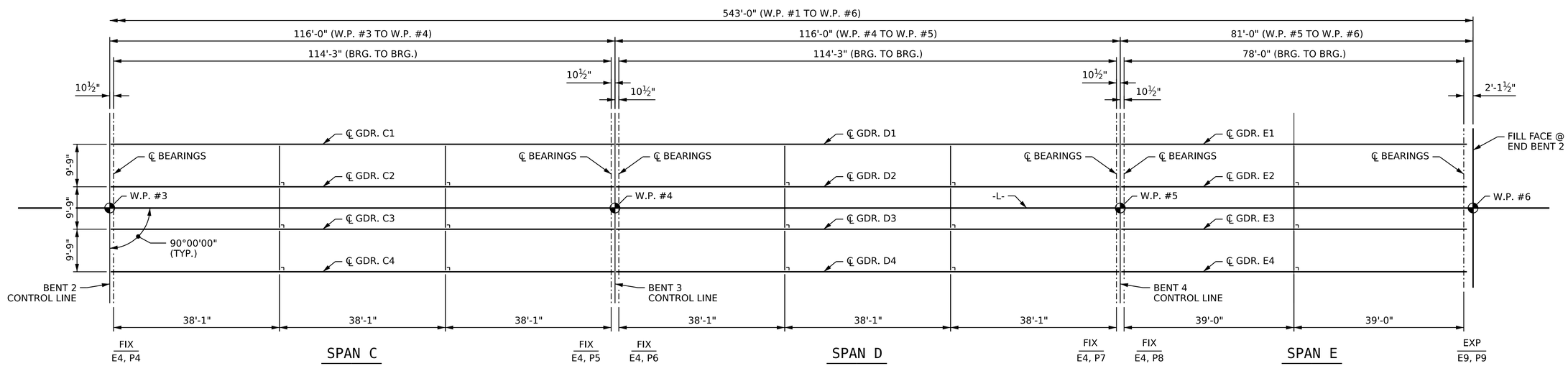

FRAMING PLAN

PROJECT NO. B-5716

ROCKINGHAM COUNTY

STATION: 18+80.50 -L-

SHEET 5 OF 5

PREPARED BY

MOTT MACDONALD

930 Main Campus Drive, Suite 200
Raleigh, NC 27606
(919) 552-2253
License No. F-0669
www.mottmac.com

NORTH CAROLINA PROFESSIONAL SEAL 043301 ENGINEER J. TIMOTHY WILLIAMS

27-Jun-2024

STATE OF NORTH CAROLINA
DEPARTMENT OF TRANSPORTATION
RALEIGH

SUPERSTRUCTURE

FRAMING PLAN

REVISIONS						SHEET NO.
NO.	BY:	DATE:	NO.	BY:	DATE:	S01-14
1			3			TOTAL SHEETS
2			4			48

DRAWN BY : L. L. BLANKENSHIP DATE : 8-2023
CHECKED BY : J. T. WILLIAMS DATE : 2-2024
DESIGN ENGINEER OF RECORD: J. T. WILLIAMS DATE : 2-2024

DOCUMENT NOT CONSIDERED FINAL UNLESS ALL SIGNATURES COMPLETED

12/16/2024 4:46:07 PM
R:\Structures\B5716_01_780140\Plans\401_027_B5716_SMU_FP_S01-14_780140.dgn
KAV06794

Docusign Envelope ID: 94478B89-8910-4784-B75E-FFD00CC24A0F

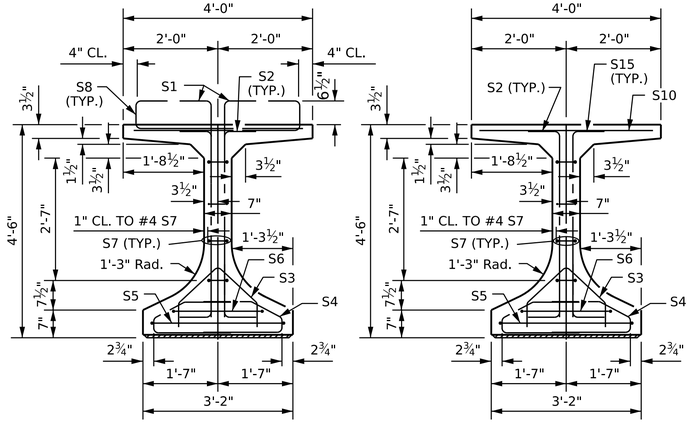

SECTION A-A

SECTION B-B

DEBONDING LEGEND

- FULLY BONDED STRANDS
- STRANDS DEBONDED FOR 6'-0" FROM END OF GIRDER
- STRANDS DEBONDED FOR 8'-0" FROM END OF GIRDER
- STRANDS DEBONDED FOR 10'-0" FROM END OF GIRDER

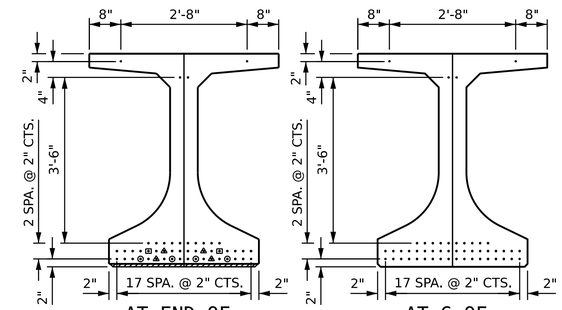

AT END OF GIRDER

AT ℄ OF GIRDER

0.6" ⌀ LOW RELAXATION STRAND LAYOUT

0.6"⌀ L. R. GRADE 270 STRANDS

AREA (SQUARE INCHES)	ULTIMATE STRENGTH (LBS. PER STRAND)	APPLIED PRESTRESS (LBS. PER STRAND)
0.217	58,600	43,950

REINFORCING STEEL FOR ONE GDR

BAR	NUMBER	SIZE	TYPE	LENGTH	WEIGHT
S1	40	#5	5	5'-4"	223
S2	28	#5	4	5'-4"	156
S3	34	#3	2	3'-4"	43
S4	68	#3	1	4'-3"	109
S5	2	#5	3	10'-9"	22
S6	2	#5	3	9'-9"	20
S7	8	#4	3	8'-5"	45
S8	202	#5	7	4'-8"	983
S9	162	#4	5	5'-4"	577
S10	54	#5	STR	3'-8"	207
S12	8	#5	6	8'-6"	71
S14	10	#4	STR	8'-0"	53
S15	28	#5	4	4'-8"	136

BAR TYPES

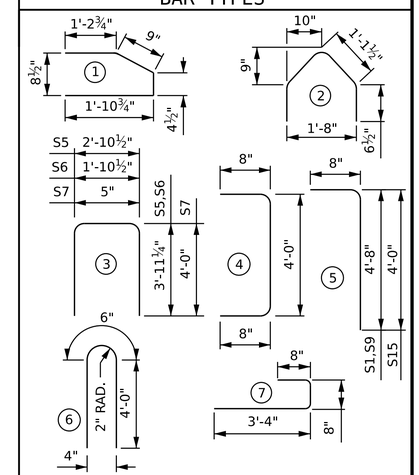

ALL BAR DIMENSIONS ARE OUT-TO-OUT

QUANTITIES FOR ONE GIRDER

REINFORCING STEEL	9000 PSI CONCRETE	0.6" ⌀ L.R. STRANDS
LB.	C.Y.	No.
2645	27.2	50

GIRDERS REQUIRED

NUMBER	LENGTH	TOTAL LENGTH
4	113'-5"	453'-8"

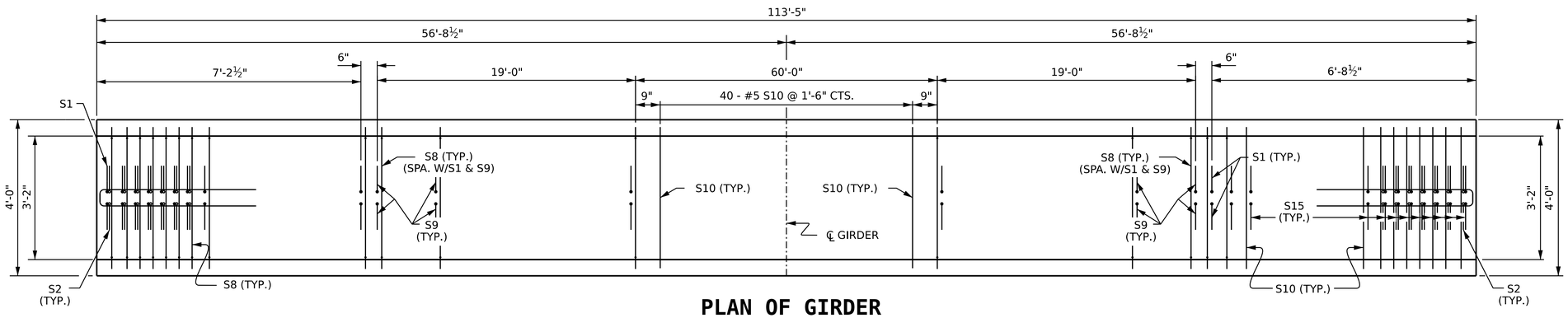

PLAN OF GIRDER

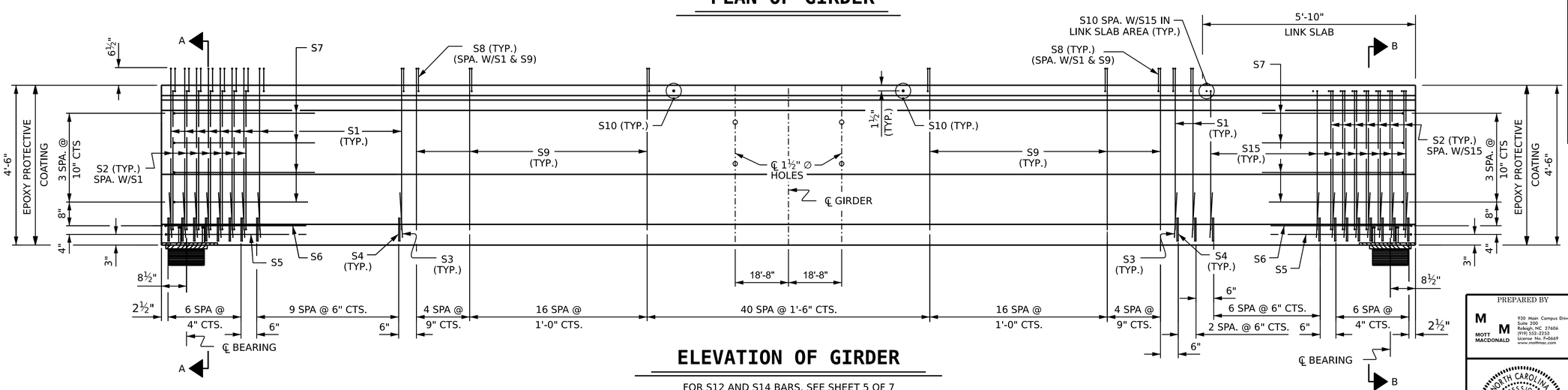

ELEVATION OF GIRDER

FOR S12 AND S14 BARS, SEE SHEET 5 OF 7

PROJECT NO. B-5716

ROCKINGHAM COUNTY

STATION: 18+80.50 -L-

SHEET 1 OF 7

PREPARED BY

MOTT MACDONALD

930 Main Campus Drive, Suite 200
Raleigh, NC 27606
(919) 553-2253
License No. F-0669
www.mottmac.com

NORTH CAROLINA PROFESSIONAL SEAL 043301 ENGINEER JONATHAN T. WILLIAMS

27-Jun-2025

STATE OF NORTH CAROLINA
DEPARTMENT OF TRANSPORTATION
RALEIGH

STANDARD

54" FIB PRESTRESSED CONCRETE GIRDER (FOR LINK SLAB)

SPAN A

REVISIONS						SHEET NO.
NO.	BY:	DATE:	NO.	BY:	DATE:	S01-15
1			3			TOTAL SHEETS
2			4			48

DOCUMENT NOT CONSIDERED FINAL UNLESS ALL SIGNATURES COMPLETED

DRAWN BY :	L. L. BLANKENSHIP	DATE :	5-2023
CHECKED BY :	R. L. DICKE	DATE :	3-2024
DESIGN ENGINEER OF RECORD:	J. T. WILLIAMS	DATE :	3-2024

6/10/2025 4:47:14 PM
C:\Users\kingsmith\OneDrive - Transit\wl57077\d0171488\401_029_B5716_SMU_G1_S01-15_780140.dgn
WL57077

Docusign Envelope ID: 94478B89-8910-4784-B75E-FFD00CC24A0F

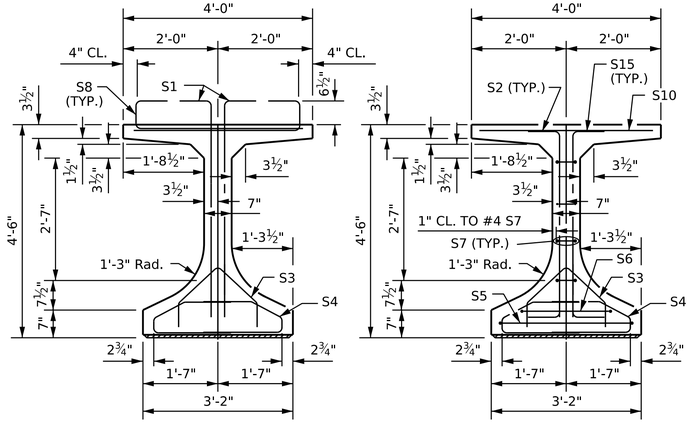

SECTION A-A

SECTION B-B

DEBONDING LEGEND

- FULLY BONDED STRANDS
- STRANDS DEBONDED FOR 6'-0" FROM END OF GIRDER
- STRANDS DEBONDED FOR 8'-0" FROM END OF GIRDER
- STRANDS DEBONDED FOR 10'-0" FROM END OF GIRDER

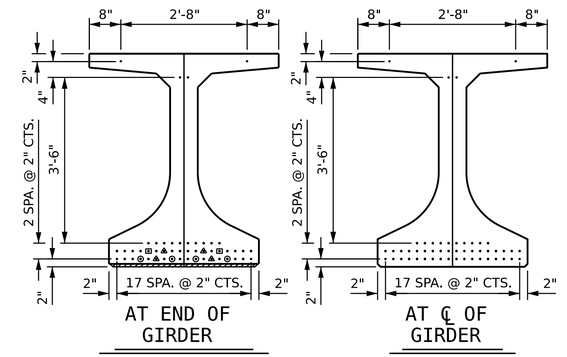

0.6" ⌀ LOW RELAXATION STRAND LAYOUT

0.6"⌀ L. R. GRADE 270 STRANDS

AREA (SQUARE INCHES)	ULTIMATE STRENGTH (LBS. PER STRAND)	APPLIED PRESTRESS (LBS. PER STRAND)
0.217	58,600	43,950

REINFORCING STEEL FOR ONE GDR

BAR	NUMBER	SIZE	TYPE	LENGTH	WEIGHT
S1	12	#5	5	5'-4"	67
S2	28	#5	4	5'-4"	156
S3	34	#3	2	3'-4"	43
S4	68	#3	1	4'-3"	109
S5	2	#5	3	10'-9"	22
S6	2	#5	3	9'-9"	20
S7	8	#4	3	8'-5"	45
S8	174	#5	7	4'-8"	847
S9	162	#4	5	5'-4"	577
S10	70	#5	STR	3'-8"	268
S12	8	#5	6	8'-6"	71
S14	10	#4	STR	8'-0"	53
S15	56	#5	5	4'-8"	273

BAR TYPES

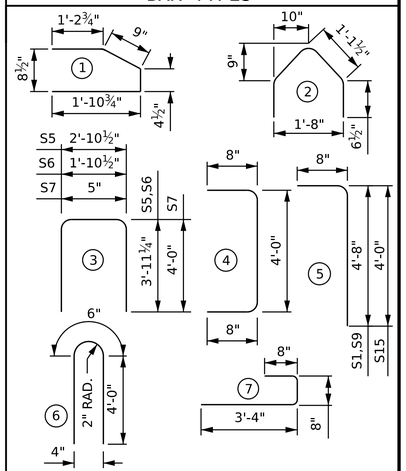

ALL BAR DIMENSIONS ARE OUT-TO-OUT

QUANTITIES FOR ONE GIRDER

REINFORCING STEEL	9000 PSI CONCRETE	0.6" ⌀ L.R. STRANDS
LB.	C.Y.	No.
2551	27.5	50

GIRDERS REQUIRED

NUMBER	LENGTH	TOTAL LENGTH
4	114'-8"	458'-8"

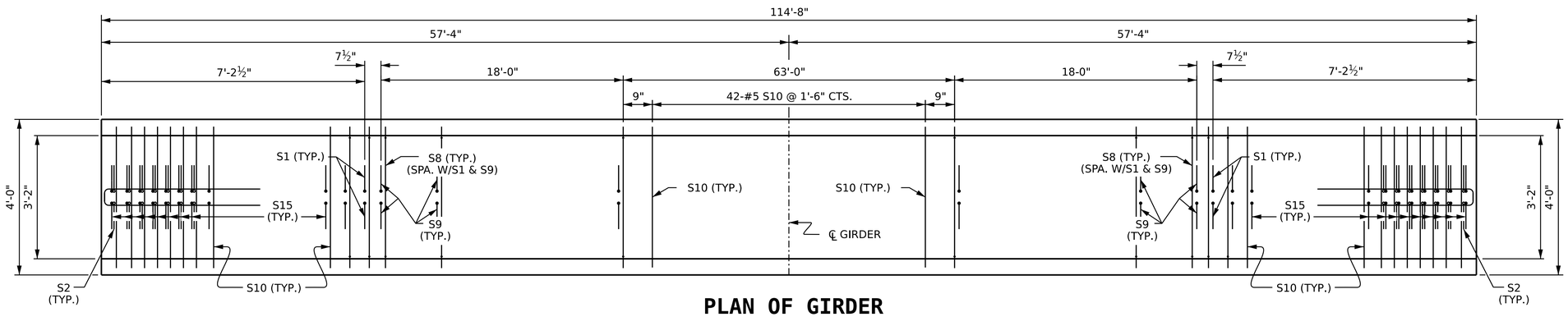

PLAN OF GIRDER

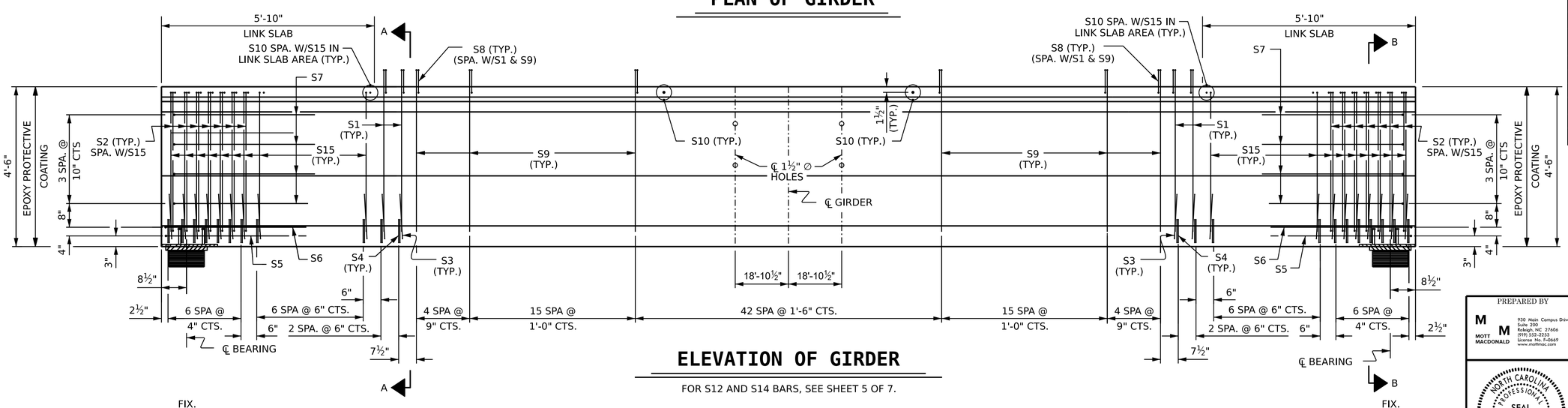

ELEVATION OF GIRDER

FOR S12 AND S14 BARS, SEE SHEET 5 OF 7.

PROJECT NO. B-5716

ROCKINGHAM COUNTY

STATION: 18+80.50 -L-

SHEET 2 OF 7

PREPARED BY

MOTT MACDONALD
930 Main Campus Drive, Suite 200
Raleigh, NC 27606
(919) 553-2253
License No. F-0669
www.mottmac.com

NORTH CAROLINA PROFESSIONAL SEAL 043301 ENGINEER
27-Jun-2024

STATE OF NORTH CAROLINA
DEPARTMENT OF TRANSPORTATION
RALEIGH

STANDARD

54" FIB PRESTRESSED CONCRETE GIRDER (FOR LINK SLAB)

SPAN B

REVISIONS						SHEET NO.
NO.	BY:	DATE:	NO.	BY:	DATE:	S01-16
1			3			TOTAL SHEETS
2			4			48

DRAWN BY : L. L. BLANKENSHIP DATE : 6-2023
CHECKED BY : R. L. DICKE DATE : 3-2024
DESIGN ENGINEER OF RECORD: J. T. WILLIAMS DATE : 3-2024

DOCUMENT NOT CONSIDERED FINAL UNLESS ALL SIGNATURES COMPLETED

6/10/2025 4:41:27 PM
C:\Users\kingsmm\OneDrive - mottmac\Documents\WORKING\WI57077\d0171488\401_031_B5716_SMU_G2_S01-16_780140.dgn

Docusign Envelope ID: 94478B89-8910-4784-B75E-FFD00CC24A0F

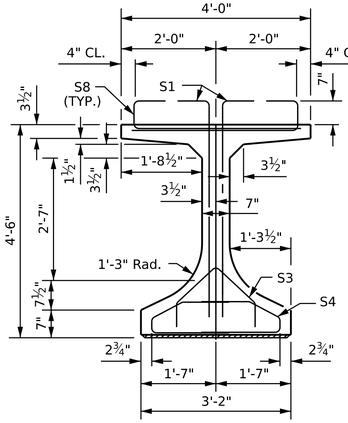

SECTION A-A

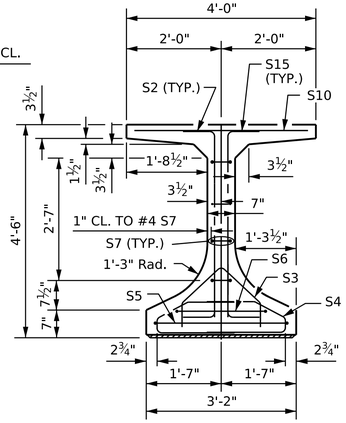

SECTION B-B

DEBONDING LEGEND

- FULLY BONDED STRANDS
- STRANDS DEBONDED FOR 6'-0" FROM END OF GIRDER
- STRANDS DEBONDED FOR 8'-0" FROM END OF GIRDER
- STRANDS DEBONDED FOR 10'-0" FROM END OF GIRDER

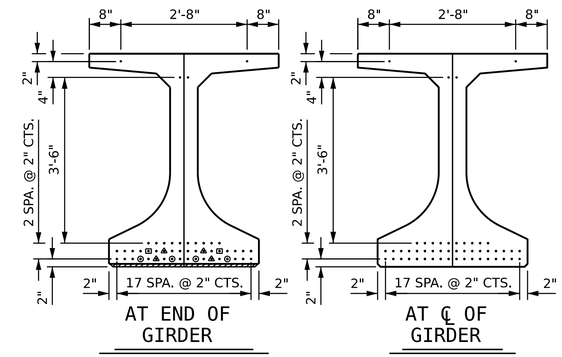

0.6" ⌀ LOW RELAXATION STRAND LAYOUT

0.6"⌀ L. R. GRADE 270 STRANDS

AREA (SQUARE INCHES)	ULTIMATE STRENGTH (LBS. PER STRAND)	APPLIED PRESTRESS (LBS. PER STRAND)
0.217	58,600	43,950

REINFORCING STEEL FOR ONE GDR

BAR	NUMBER	SIZE	TYPE	LENGTH	WEIGHT
S1	12	#5	5	5'-4"	67
S2	28	#5	4	5'-4"	156
S3	34	#3	2	3'-4"	43
S4	68	#3	1	4'-3"	109
S5	2	#5	3	10'-9"	22
S6	2	#5	3	9'-9"	20
S7	8	#4	3	8'-5"	45
S8	96	#5	7	4'-9"	476
S9	166	#4	5	5'-4"	591
S10	54	#5	STR	3'-8"	207
S12	8	#5	6	8'-6"	71
S14	10	#4	STR	8'-0"	53
S15	56	#5	5	4'-8"	273
S16	82	#5	7	4'-10"	413

BAR TYPES

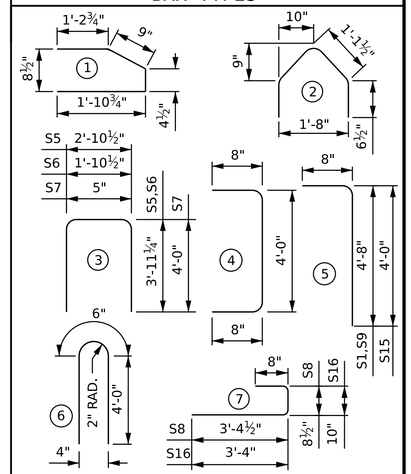

ALL BAR DIMENSIONS ARE OUT-TO-OUT

QUANTITIES FOR ONE GIRDER

REINFORCING STEEL	9000 PSI CONCRETE	0.6" ⌀ L.R. STRANDS
LB.	C.Y.	No.
2546	27.7	50

GIRDERS REQUIRED

NUMBER	LENGTH	TOTAL LENGTH
8	115'-8"	925'-4"

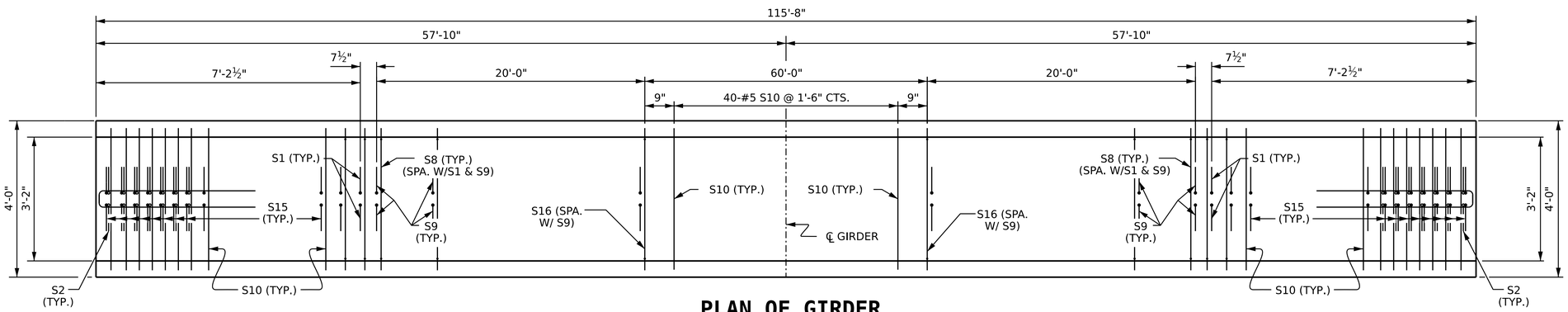

PLAN OF GIRDER

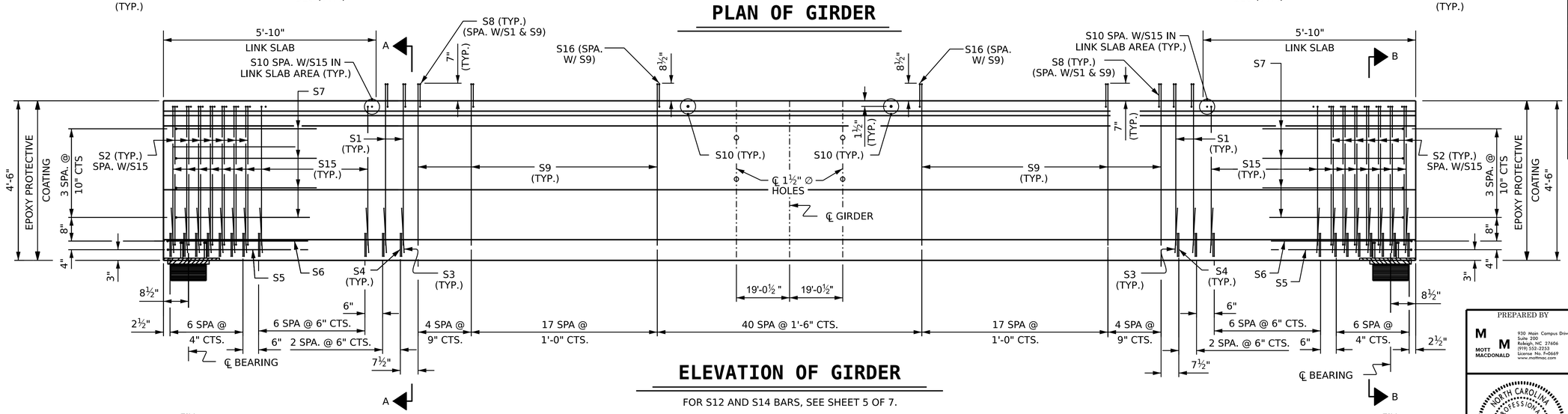

ELEVATION OF GIRDER

FOR S12 AND S14 BARS, SEE SHEET 5 OF 7.

PROJECT NO. B-5716

ROCKINGHAM COUNTY

STATION: 18+80.50 -L-

SHEET 3 OF 7

PREPARED BY

MOTT MACDONALD
930 Main Campus Drive, Suite 200
Raleigh, NC 27606
(919) 552-2253
License No. F-0669
www.mottmac.com

NORTH CAROLINA PROFESSIONAL SEAL 043301 ENGINEER JONATHAN T. WILLIAMS
CF88347B-8B8E-4C0A-...
27-Jun-2025

STATE OF NORTH CAROLINA
DEPARTMENT OF TRANSPORTATION
RALEIGH

STANDARD

54" FIB PRESTRESSED CONCRETE GIRDER (FOR LINK SLAB)

SPAN C AND D

REVISIONS								SHEET NO.
NO.	BY:	DATE:	NO.	BY:	DATE:			S01-17
1			3					TOTAL SHEETS
2			4					48

DRAWN BY : L. L. BLANKENSHIP DATE : 6-2023
CHECKED BY : R. L. DICKE DATE : 3-2024
DESIGN ENGINEER OF RECORD: J. T. WILLIAMS DATE : 3-2024

DOCUMENT NOT CONSIDERED FINAL UNLESS ALL SIGNATURES COMPLETED

6/10/2025 5:30:45 PM
C:\Users\kdickinson\Desktop\WIL57077\dgn\WIL57077-sht01-17_780140.dgn
WIL57077

Docusign Envelope ID: 94478B89-8910-4784-B75E-FFD00CC24A0F

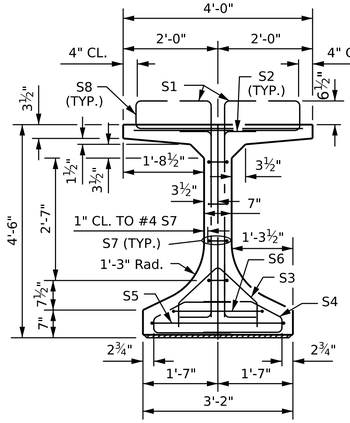

SECTION A-A

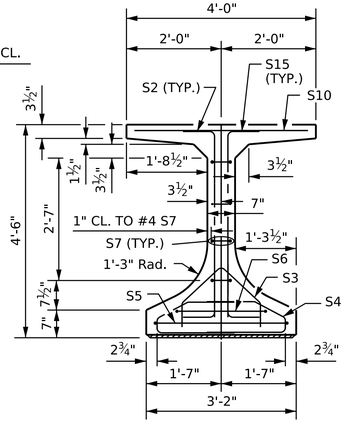

SECTION B-B

DEBONDING LEGEND

- ● FULLY BONDED STRANDS
- ◈ STRANDS DEBONDED FOR 4'-0" FROM END OF GIRDER
- ▣ STRANDS DEBONDED FOR 6'-0" FROM END OF GIRDER

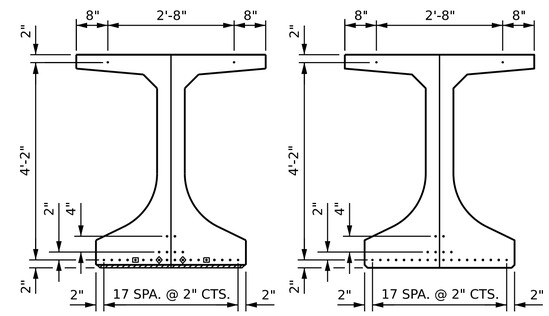

0.6" ⌀ LOW RELAXATION STRAND LAYOUT

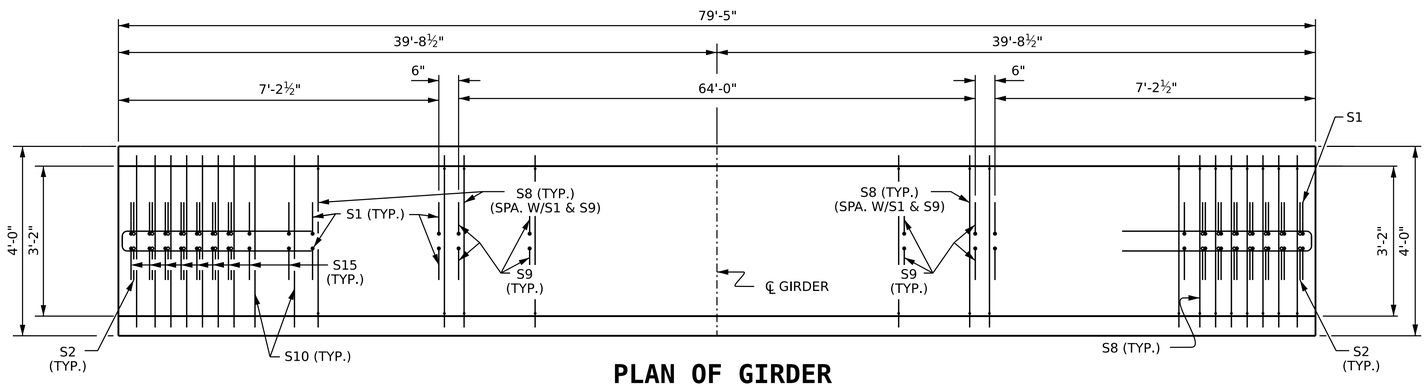

PLAN OF GIRDER

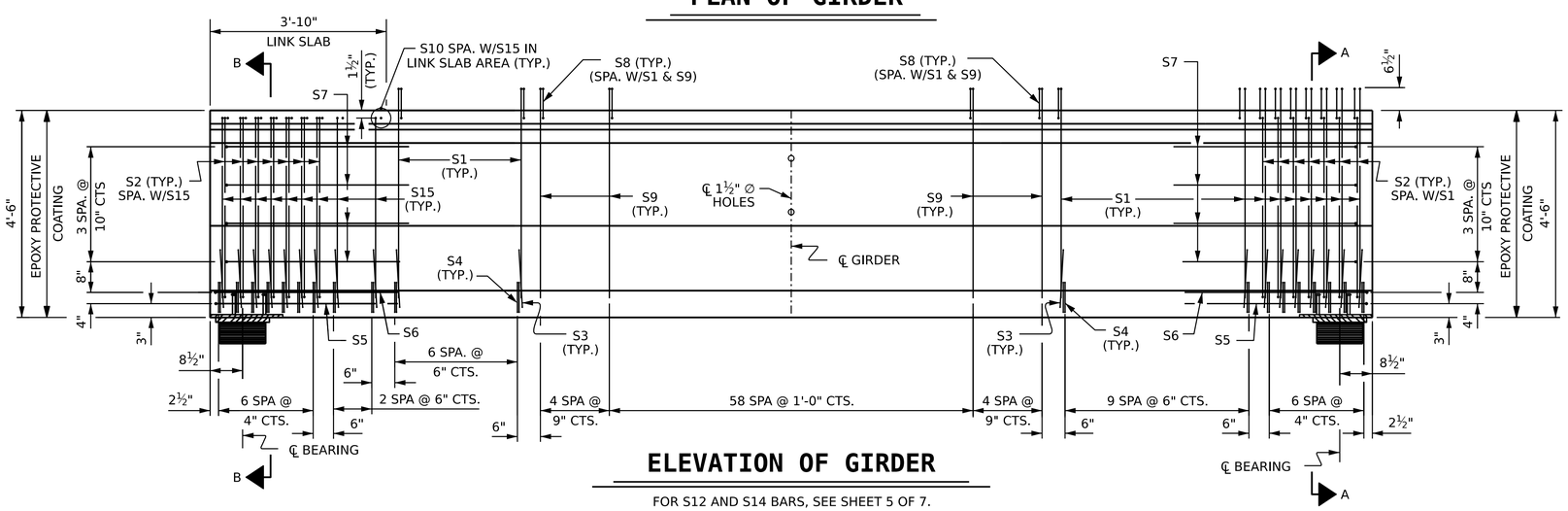

ELEVATION OF GIRDER

FOR S12 AND S14 BARS, SEE SHEET 5 OF 7.

0.6"⌀ L. R. GRADE 270 STRANDS

AREA (SQUARE INCHES)	ULTIMATE STRENGTH (LBS. PER STRAND)	APPLIED PRESTRESS (LBS. PER STRAND)
0.217	58,600	43,950

REINFORCING STEEL FOR ONE GDR

BAR	NUMBER	SIZE	TYPE	LENGTH	WEIGHT
S1	48	#5	5	5'-4"	268
S2	28	#5	4	5'-4"	156
S3	34	#3	2	3'-4"	43
S4	68	#3	1	4'-3"	109
S5	2	#5	3	10'-9"	22
S6	2	#5	3	9'-9"	20
S7	8	#4	3	8'-5"	45
S8	182	#5	7	4'-8"	886
S9	134	#4	5	5'-4"	477
S10	10	#5	STR	3'-8"	38
S12	4	#5	6	8'-6"	35
S14	5	#4	STR	8'-0"	27
S15	20	#5	5	4'-8"	97

BAR TYPES

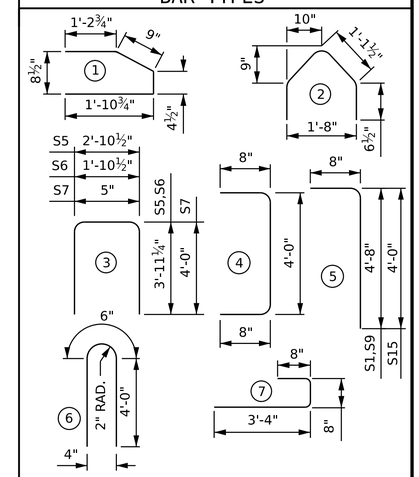

ALL BAR DIMENSIONS ARE OUT-TO-OUT

QUANTITIES FOR ONE GIRDER

REINFORCING STEEL	6000 PSI CONCRETE	0.6" ⌀ L.R. STRANDS
LB.	C.Y.	No.
2223	19.1	26

GIRDERS REQUIRED

NUMBER	LENGTH	TOTAL LENGTH
4	79'-5"	317'-8"

PROJECT NO. B-5716

ROCKINGHAM COUNTY

STATION: 18+80.50 -L-

SHEET 4 OF 7

PREPARED BY

MOTT MACDONALD
930 Main Campus Drive, Suite 200
Raleigh, NC 27606
(919) 552-2333
License No. F-0669
www.mottmac.com

NORTH CAROLINA PROFESSIONAL SEAL 043301 ENGINEER JONATHAN T. WILLIAMS
27-Jun-2025

STATE OF NORTH CAROLINA
DEPARTMENT OF TRANSPORTATION
RALEIGH

STANDARD

54" FIB PRESTRESSED CONCRETE GIRDER (FOR LINK SLAB)

SPAN E

REVISIONS								SHEET NO.
NO.	BY:	DATE:	NO.	BY:	DATE:			S01-18
1			3					TOTAL SHEETS
2			4					48

DRAWN BY : L. L. BLANKENSHIP DATE : 6-2023
CHECKED BY : R. L. DICKE DATE : 3-2024
DESIGN ENGINEER OF RECORD: J. T. WILLIAMS DATE : 3-2024

DOCUMENT NOT CONSIDERED FINAL UNLESS ALL SIGNATURES COMPLETED

6/10/2025 4:47:40 PM
C:\Users\kwilliams\Mott MacDonald\Desktop\WorkingDir\B-5716_SMU_G4_S01-18_780140.dgn
WI157077

Docusign Envelope ID: 94478B89-8910-4784-B75E-FFD00CC24A0F

DEAD LOAD DEFLECTION TABLE

0.6" ⌀ LOW RELAXATION — SPAN A

EXTERIOR GIRDERS

FOURTIETH POINTS	0.000	0.025	0.050	0.075	0.100	0.125	0.150	0.175	0.200	0.225	0.250	0.275	0.300	0.325	0.350	0.375	0.400	0.425	0.450	0.475	0.500
CAMBER (GIRDER ALONE IN PLACE) ↑	0.000	0.027	0.053	0.079	0.105	0.130	0.154	0.177	0.197	0.219	0.238	0.256	0.272	0.286	0.299	0.309	0.318	0.325	0.330	0.333	0.334
* DEFLECTION DUE TO D.L. ↓	0.000	0.017	0.033	0.049	0.065	0.081	0.096	0.110	0.123	0.136	0.148	0.159	0.169	0.178	0.186	0.192	0.198	0.202	0.205	0.207	0.208
FINAL CAMBER ↑	0"	1/8"	1/4"	3/8"	1/2"	9/16"	11/16"	13/16"	7/8"	1"	1 1/16"	1 3/16"	1 1/4"	1 5/16"	1 3/8"	1 3/8"	1 7/16"	1 1/2"	1 1/2"	1 1/2"	1 1/2"

FOURTIETH POINTS	0.525	0.550	0.575	0.600	0.625	0.650	0.675	0.700	0.725	0.750	0.775	0.800	0.825	0.850	0.875	0.900	0.925	0.950	0.975	1.000
CAMBER (GIRDER ALONE IN PLACE) ↑	0.333	0.330	0.325	0.318	0.309	0.299	0.286	0.272	0.256	0.238	0.219	0.197	0.177	0.154	0.130	0.105	0.079	0.053	0.027	0.000
* DEFLECTION DUE TO D.L. ↓	0.207	0.205	0.202	0.198	0.192	0.186	0.178	0.169	0.159	0.148	0.136	0.123	0.110	0.096	0.081	0.065	0.049	0.033	0.017	0.000
FINAL CAMBER ↑	1 1/2"	1 1/2"	1 1/2"	1 7/16"	1 3/8"	1 3/8"	1 5/16"	1 1/4"	1 3/16"	1 1/16"	1"	7/8"	13/16"	11/16"	9/16"	1/2"	3/8"	1/4"	1/8"	0"

INTERIOR GIRDERS

FOURTIETH POINTS	0.000	0.025	0.050	0.075	0.100	0.125	0.150	0.175	0.200	0.225	0.250	0.275	0.300	0.325	0.350	0.375	0.400	0.425	0.450	0.475	0.500
CAMBER (GIRDER ALONE IN PLACE) ↑	0.000	0.027	0.053	0.079	0.105	0.130	0.154	0.177	0.197	0.219	0.238	0.256	0.272	0.286	0.299	0.309	0.318	0.325	0.330	0.333	0.334
* DEFLECTION DUE TO D.L. ↓	0.000	0.018	0.035	0.053	0.070	0.087	0.103	0.118	0.132	0.146	0.159	0.171	0.181	0.191	0.199	0.207	0.212	0.217	0.220	0.222	0.223
FINAL CAMBER ↑	0"	1/8"	3/16"	5/16"	7/16"	1/2"	5/8"	11/16"	13/16"	7/8"	15/16"	1"	1 1/16"	1 1/8"	1 3/16"	1 1/4"	1 1/4"	1 5/16"	1 5/16"	1 5/16"	1 5/16"

FOURTIETH POINTS	0.525	0.550	0.575	0.600	0.625	0.650	0.675	0.700	0.725	0.750	0.775	0.800	0.825	0.850	0.875	0.900	0.925	0.950	0.975	1.000
CAMBER (GIRDER ALONE IN PLACE) ↑	0.333	0.330	0.325	0.318	0.309	0.299	0.286	0.272	0.256	0.238	0.219	0.197	0.177	0.154	0.130	0.105	0.079	0.053	0.027	0.000
* DEFLECTION DUE TO D.L. ↓	0.222	0.220	0.217	0.212	0.207	0.199	0.191	0.181	0.171	0.159	0.146	0.132	0.118	0.103	0.087	0.070	0.053	0.035	0.018	0.000
FINAL CAMBER ↑	1 5/16"	1 5/16"	1 5/16"	1 1/4"	1 1/4"	1 3/16"	1 1/8"	1 1/16"	1"	15/16"	7/8"	13/16"	11/16"	5/8"	1/2"	7/16"	5/16"	3/16"	1/8"	0"

0.6" ⌀ LOW RELAXATION — SPAN B

EXTERIOR GIRDERS

FOURTIETH POINTS	0.000	0.025	0.050	0.075	0.100	0.125	0.150	0.175	0.200	0.225	0.250	0.275	0.300	0.325	0.350	0.375	0.400	0.425	0.450	0.475	0.500
CAMBER (GIRDER ALONE IN PLACE) ↑	0.000	0.027	0.053	0.079	0.105	0.130	0.154	0.177	0.198	0.219	0.239	0.256	0.272	0.287	0.299	0.310	0.319	0.326	0.331	0.334	0.335
* DEFLECTION DUE TO D.L. ↓	0.000	0.017	0.034	0.051	0.068	0.084	0.100	0.115	0.128	0.142	0.154	0.166	0.176	0.185	0.194	0.200	0.206	0.211	0.214	0.216	0.217
FINAL CAMBER ↑	0"	1/8"	1/4"	5/16"	7/16"	9/16"	5/8"	3/4"	13/16"	15/16"	1"	1 1/16"	1 1/8"	1 3/16"	1 1/4"	1 5/16"	1 3/8"	1 3/8"	1 3/8"	1 7/16"	1 7/16"

FOURTIETH POINTS	0.525	0.550	0.575	0.600	0.625	0.650	0.675	0.700	0.725	0.750	0.775	0.800	0.825	0.850	0.875	0.900	0.925	0.950	0.975	1.000
CAMBER (GIRDER ALONE IN PLACE) ↑	0.334	0.331	0.326	0.319	0.310	0.299	0.287	0.272	0.256	0.239	0.219	0.198	0.177	0.154	0.130	0.105	0.079	0.053	0.027	0.000
* DEFLECTION DUE TO D.L. ↓	0.216	0.214	0.211	0.206	0.200	0.194	0.185	0.176	0.166	0.154	0.142	0.128	0.115	0.100	0.084	0.068	0.051	0.034	0.017	0.000
FINAL CAMBER ↑	1 7/16"	1 3/8"	1 3/8"	1 3/8"	1 5/16"	1 1/4"	1 3/16"	1 1/8"	1 1/16"	1"	15/16"	13/16"	3/4"	5/8"	9/16"	7/16"	5/16"	1/4"	1/8"	0"

INTERIOR GIRDERS

FOURTIETH POINTS	0.000	0.025	0.050	0.075	0.100	0.125	0.150	0.175	0.200	0.225	0.250	0.275	0.300	0.325	0.350	0.375	0.400	0.425	0.450	0.475	0.500
CAMBER (GIRDER ALONE IN PLACE) ↑	0.000	0.027	0.053	0.079	0.105	0.130	0.154	0.177	0.198	0.219	0.239	0.256	0.272	0.287	0.299	0.310	0.319	0.326	0.331	0.334	0.335
* DEFLECTION DUE TO D.L. ↓	0.000	0.019	0.037	0.055	0.073	0.090	0.107	0.123	0.137	0.152	0.166	0.178	0.189	0.199	0.208	0.215	0.221	0.226	0.230	0.232	0.232
FINAL CAMBER ↑	0"	1/8"	3/16"	5/16"	3/8"	1/2"	9/16"	5/8"	3/4"	13/16"	7/8"	15/16"	1"	1 1/16"	1 1/8"	1 1/8"	1 3/16"	1 3/16"	1 3/16"	1 1/4"	1 1/4"

FOURTIETH POINTS	0.525	0.550	0.575	0.600	0.625	0.650	0.675	0.700	0.725	0.750	0.775	0.800	0.825	0.850	0.875	0.900	0.925	0.950	0.975	1.000
CAMBER (GIRDER ALONE IN PLACE) ↑	0.334	0.331	0.326	0.319	0.310	0.299	0.287	0.272	0.256	0.239	0.219	0.198	0.177	0.154	0.130	0.105	0.079	0.053	0.027	0.000
* DEFLECTION DUE TO D.L. ↓	0.232	0.230	0.226	0.221	0.215	0.208	0.199	0.189	0.178	0.166	0.152	0.137	0.123	0.107	0.090	0.073	0.055	0.037	0.019	0.000
FINAL CAMBER ↑	1 1/4"	1 3/16"	1 3/16"	1 3/16"	1 1/8"	1 1/8"	1 1/16"	1"	15/16"	7/8"	13/16"	3/4"	5/8"	9/16"	1/2"	3/8"	5/16"	3/16"	1/8"	0"

* INCLUDES FUTURE WEARING SURFACE

ALL VALUES ARE SHOWN IN FEET (DECIMAL FORM), EXCEPT "FINAL CAMBER", WHICH IS GIVEN IN INCHES (FRACTION FORM).

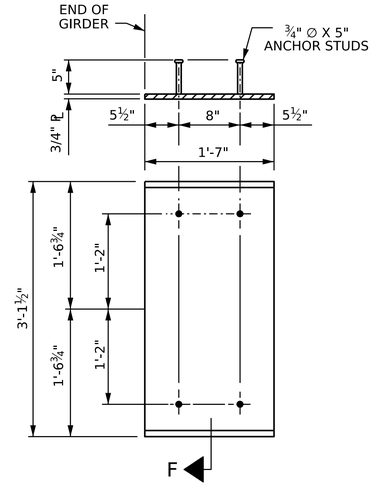

EMBEDDED PLATE "B-1" DETAILS FOR FIB GIRDER

(2 REQ'D PER GIRDER)

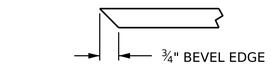

SECTION "F"

(SEE NOTES)

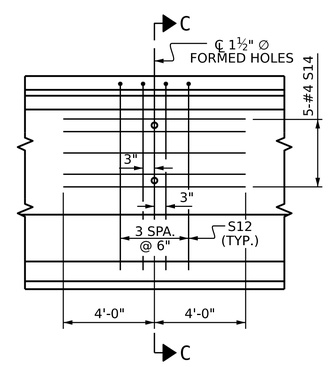

PARTIAL ELEVATION

SHOWING INTERMEDIATE STEEL DIAPHRAGM REINFORCING STEEL FOR GIRDERS

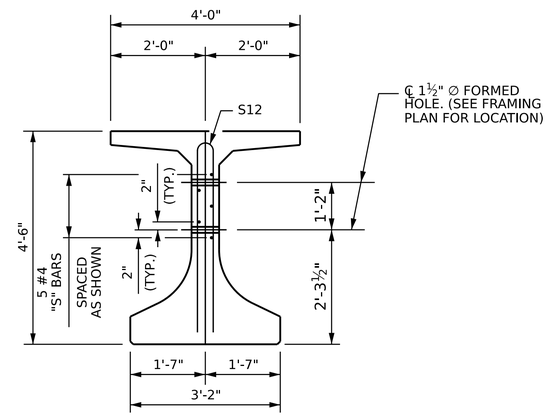

SECTION C-C

(S8, S9 AND S10 BARS NOT SHOWN)

NOTES:

ALL PRESTRESSING STRANDS SHALL BE 7-WIRE LOW-RELAXATION GRADE 270 STRANDS AND SHALL CONFORM TO AASHTO M203 EXCEPT FOR SAMPLING REQUIREMENTS WHICH SHALL BE IN ACCORDANCE WITH THE STANDARD SPECIFICATIONS.

ALL REINFORCING STEEL SHALL BE GRADE 60.

APPLY EPOXY PROTECTIVE COATING TO END OF GIRDER SURFACES INDICATED IN ELEVATION VIEW.

EMBEDDED PLATE "B-1" SHALL BE GALVANIZED IN ACCORDANCE WITH THE STANDARD SPECIFICATIONS.

ANCHOR STUDS SHALL CONFORM TO AASHTO M169 GRADES 1010 THROUGH 1020 OR APPROVED EQUAL, AND SHALL MEET THE TYPE "B" REQUIREMENTS OF SUBSECTION 7.3 OF THE ANSI/AASHTO/AWS D1.5 BRIDGE WELDING CODE.

AT ENDS OF GIRDERS TO BE EMBEDDED IN CONCRETE DIAPHRAGMS OR END WALLS, PRESTRESSING STRANDS MAY EXTEND A MAXIMUM OF 2" BEYOND THE GIRDER ENDS. OTHERWISE, PRESTRESSING STRANDS SHALL BE CUT FLUSH WITH THE GIRDER ENDS.

THE TRANSFER OF LOAD FROM THE ANCHORAGES TO THE GIRDER SHALL BE DONE WHEN CONCRETE HAS REACHED A COMPRESSIVE STRENGTH OF NOT LESS THAN 6500 PSI FOR SPANS A, B, C, AND D, AND 4500 PSI FOR SPAN E.

DEPENDING ON THE TYPE OF SYSTEM USED TO SUPPORT THE DECK SLAB FORMS, PRESET ANCHORS MAY BE NECESSARY IN THE PRESTRESSED CONCRETE GIRDER.

THE TOP SURFACE OF THE GIRDER, EXCLUDING THE OUTSIDE 4" AND THE LINK SLAB AREA, SHALL BE RAKED TO A DEPTH OF 1/4".

THE CONTRACTOR HAS THE OPTION TO PROVIDE, AT NO ADDITIONAL COST TO THE DEPARTMENT, 2 ADDITIONAL STRANDS AT THE TOP OF THE GIRDER TO FACILITATE TYING OF THE REINFORCING STEEL. THESE STRANDS SHALL BE PULLED TO A LOAD OF 4500 LBS..

PROJECT NO. B-5716
ROCKINGHAM COUNTY
STATION: 18+80.50 -L-

SHEET 5 OF 7

PREPARED BY
MOTT MACDONALD
930 Main Campus Drive, Suite 200
Raleigh, NC 27606
(919) 532-2253
License No. F-0669
www.mottmac.com

NORTH CAROLINA PROFESSIONAL SEAL 043301 ENGINEER JOHNNAN T. WILLIAMS
27-Jun-2024

STATE OF NORTH CAROLINA
DEPARTMENT OF TRANSPORTATION
RALEIGH

SUPERSTRUCTURE

PRESTRESSED CONCRETE GIRDER DETAILS

REVISIONS						SHEET NO.
NO.	BY:	DATE:	NO.	BY:	DATE:	S01-19
1			3			TOTAL SHEETS
2			4			48

DOCUMENT NOT CONSIDERED FINAL UNLESS ALL SIGNATURES COMPLETED

DRAWN BY : L. L. BLANKENSHIP DATE : 6-2023
CHECKED BY : J. T. WILLIAMS DATE : 4-2024
DESIGN ENGINEER OF RECORD: J. T. WILLIAMS DATE : 4-2024

12/16/2024 4:48:16 PM
R:\Structures\B5716_01\780140\Plans\401_037_B5716_SMU_GS_S01-19_780140.dgn
KAVI06794

Docusign Envelope ID: 94478B89-8910-4784-B75E-FFD00CC24A0F

DEAD LOAD DEFLECTION TABLE

0.6" ⌀ LOW RELAXATION — SPANS C & D

EXTERIOR GIRDERS

FOURTIETH POINTS	0.000	0.025	0.050	0.075	0.100	0.125	0.150	0.175	0.200	0.225	0.250	0.275	0.300	0.325	0.350	0.375	0.400	0.425	0.450	0.475	0.500
CAMBER (GIRDER ALONE IN PLACE) ↑	0.000	0.027	0.053	0.079	0.105	0.130	0.154	0.177	0.198	0.220	0.239	0.257	0.273	0.287	0.300	0.311	0.319	0.326	0.331	0.334	0.335
* DEFLECTION DUE TO D.L. ↓	0.000	0.019	0.037	0.055	0.074	0.091	0.108	0.124	0.138	0.153	0.167	0.179	0.190	0.200	0.209	0.217	0.223	0.228	0.231	0.233	0.234
FINAL CAMBER ↑	0"	1/8"	3/16"	5/16"	3/8"	1/2"	9/16"	5/8"	11/16"	13/16"	7/8"	15/16"	1"	1 1/16"	1 1/16"	1 1/8"	1 3/16"	1 3/16"	1 3/16"	1 3/16"	1 3/16"

FOURTIETH POINTS	0.525	0.550	0.575	0.600	0.625	0.650	0.675	0.700	0.725	0.750	0.775	0.800	0.825	0.850	0.875	0.900	0.925	0.950	0.975	1.000
CAMBER (GIRDER ALONE IN PLACE) ↑	0.334	0.331	0.326	0.319	0.311	0.300	0.287	0.273	0.257	0.239	0.220	0.198	0.177	0.154	0.130	0.105	0.079	0.053	0.027	0.000
* DEFLECTION DUE TO D.L. ↓	0.233	0.231	0.228	0.223	0.217	0.209	0.200	0.190	0.179	0.167	0.153	0.138	0.124	0.108	0.091	0.074	0.055	0.037	0.019	0.000
FINAL CAMBER ↑	1 3/16"	1 3/16"	1 3/16"	1 3/16"	1 1/8"	1 1/16"	1 1/16"	1"	15/16"	7/8"	13/16"	11/16"	5/8"	9/16"	1/2"	3/8"	5/16"	3/16"	1/8"	0"

INTERIOR GIRDERS

FOURTIETH POINTS	0.000	0.025	0.050	0.075	0.100	0.125	0.150	0.175	0.200	0.225	0.250	0.275	0.300	0.325	0.350	0.375	0.400	0.425	0.450	0.475	0.500
CAMBER (GIRDER ALONE IN PLACE) ↑	0.000	0.027	0.053	0.079	0.105	0.130	0.154	0.177	0.198	0.220	0.239	0.257	0.273	0.287	0.300	0.311	0.319	0.326	0.331	0.334	0.335
* DEFLECTION DUE TO D.L. ↓	0.000	0.020	0.040	0.059	0.079	0.097	0.115	0.133	0.148	0.164	0.179	0.192	0.204	0.215	0.224	0.232	0.239	0.224	0.248	0.250	0.251
FINAL CAMBER ↑	0"	1/16"	3/16"	1/4"	5/16"	3/8"	7/16"	9/16"	5/8"	11/16"	3/4"	3/4"	13/16"	7/8"	15/16"	15/16"	15/16"	1"	1"	1"	1"

FOURTIETH POINTS	0.525	0.550	0.575	0.600	0.625	0.650	0.675	0.700	0.725	0.750	0.775	0.800	0.825	0.850	0.875	0.900	0.925	0.950	0.975	1.000
CAMBER (GIRDER ALONE IN PLACE) ↑	0.334	0.331	0.326	0.319	0.311	0.300	0.287	0.273	0.257	0.239	0.220	0.198	0.177	0.154	0.130	0.105	0.079	0.053	0.027	0.000
* DEFLECTION DUE TO D.L. ↓	0.250	0.248	0.224	0.239	0.232	0.224	0.215	0.204	0.192	0.179	0.164	0.148	0.133	0.115	0.097	0.079	0.059	0.040	0.020	0.000
FINAL CAMBER ↑	1"	1"	1"	15/16"	15/16"	15/16"	7/8"	13/16"	3/4"	3/4"	11/16"	5/8"	9/16"	7/16"	3/8"	5/16"	1/4"	3/16"	1/16"	0"

0.6" ⌀ LOW RELAXATION — SPAN E

EXTERIOR GIRDERS

TWENTIETH POINTS	0.000	0.050	0.100	0.150	0.200	0.250	0.300	0.350	0.400	0.450	0.500	0.550	0.600	0.650	0.700	0.750	0.800	0.850	0.900	0.950	1.000
CAMBER (GIRDER ALONE IN PLACE) ↑	0.000	0.018	0.036	0.053	0.068	0.083	0.094	0.104	0.110	0.114	0.116	0.114	0.110	0.104	0.094	0.083	0.069	0.053	0.036	0.018	0.000
* DEFLECTION DUE TO D.L. ↓	0.000	0.009	0.018	0.026	0.033	0.040	0.046	0.050	0.053	0.055	0.056	0.055	0.053	0.050	0.046	0.040	0.033	0.026	0.018	0.009	0.000
FINAL CAMBER ↑	0"	1/8"	1/4"	5/16"	7/16"	1/2"	9/16"	5/8"	11/16"	11/16"	11/16"	11/16"	11/16"	5/8"	9/16"	1/2"	7/16"	5/16"	1/4"	1/8"	0"

INTERIOR GIRDERS

TWENTIETH POINTS	0.000	0.050	0.100	0.150	0.200	0.250	0.300	0.350	0.400	0.450	0.500	0.550	0.600	0.650	0.700	0.750	0.800	0.850	0.900	0.950	1.000
CAMBER (GIRDER ALONE IN PLACE) ↑	0.000	0.018	0.036	0.053	0.068	0.083	0.094	0.104	0.110	0.114	0.116	0.114	0.110	0.104	0.094	0.083	0.069	0.053	0.036	0.018	0.000
* DEFLECTION DUE TO D.L. ↓	0.000	0.010	0.019	0.028	0.035	0.043	0.049	0.054	0.057	0.059	0.060	0.059	0.057	0.054	0.049	0.043	0.036	0.028	0.019	0.010	0.000
FINAL CAMBER ↑	0"	1/8"	3/16"	5/16"	3/8"	1/2"	9/16"	5/8"	5/8"	11/16"	11/16"	11/16"	5/8"	5/8"	9/16"	1/2"	3/8"	5/16"	3/16"	1/8"	0"

PROJECT NO. B-5716

ROCKINGHAM COUNTY

STATION: 18+80.50 -L-

SHEET 6 OF 7

PREPARED BY

MOTT MACDONALD

930 Main Campus Drive, Suite 200
Raleigh, NC 27606
(919) 532-2253
License No. F-0669
www.mottmac.com

NORTH CAROLINA PROFESSIONAL SEAL 043301 ENGINEER JOHNATHAN T. WILLIAMS

CF8B3A4B6A4B4C0...
27-Jun-2025

STATE OF NORTH CAROLINA
DEPARTMENT OF TRANSPORTATION
RALEIGH

SUPERSTRUCTURE

PRESTRESSED CONCRETE GIRDER DETAILS

REVISIONS						SHEET NO.
NO.	BY:	DATE:	NO.	BY:	DATE:	S01-20
1			3			TOTAL SHEETS
2			4			48

DOCUMENT NOT CONSIDERED FINAL UNLESS ALL SIGNATURES COMPLETED

DRAWN BY :	L. L. BLANKENSHIP	DATE :	6-2023
CHECKED BY :	J. T. WILLIAMS	DATE :	4-2024
DESIGN ENGINEER OF RECORD:	J. T. WILLIAMS	DATE :	4-2024

12/16/2024 4:42:17 PM
R:\Structures\B16.01.780140\Plans\401_039_B5716_SMU_G6_S01-20_780140.dgn
KAVI06794

Docusign Envelope ID: 94478B89-8910-4784-B75E-FFD00CC24A0F

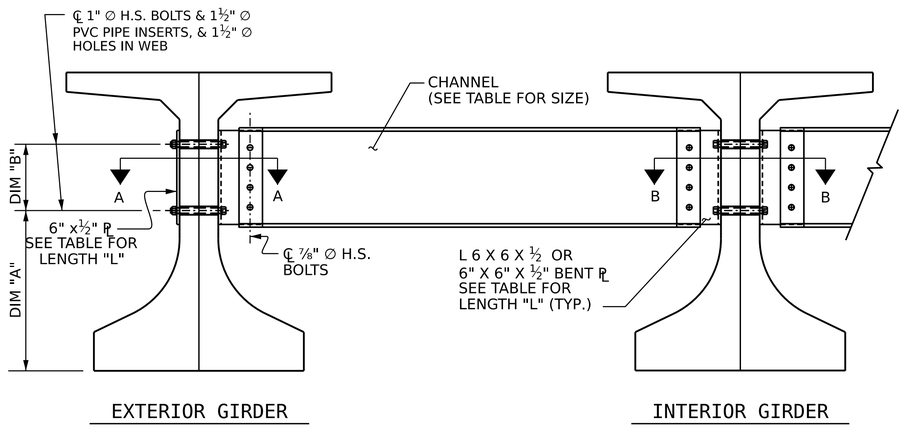

PART SECTION AT INTERMEDIATE DIAPHRAGM

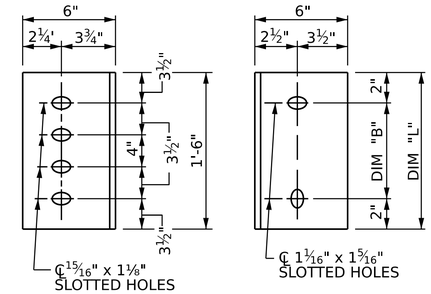

CONNECTOR PLATE DETAILS

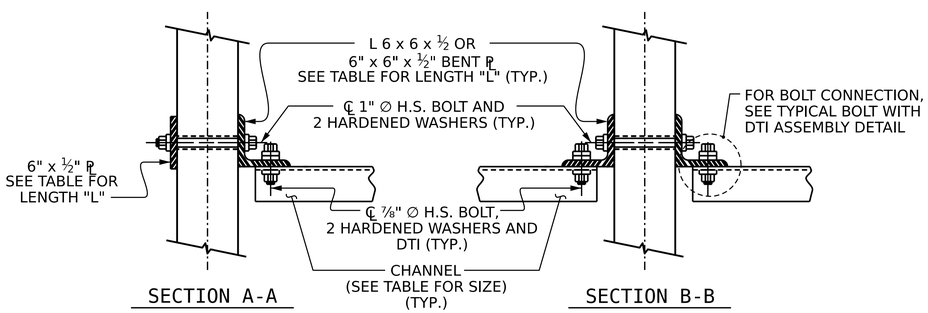

CONNECTION DETAILS

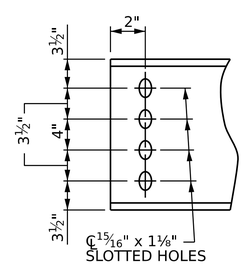

CHANNEL END

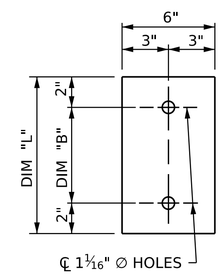

PLATE DETAILS

STRUCTURAL STEEL NOTES:

ALL INTERMEDIATE DIAPHRAGM STEEL AND CONNECTOR PLATES SHALL BE AASHTO M270 GRADE 50 OR APPROVED EQUAL.

TENSION ON THE ASTM A325 BOLTS THROUGH THE ANGLE MEMBER SHALL BE CALIBRATED USING DIRECT TENSION INDICATOR WASHERS IN ACCORDANCE WITH THE STANDARD SPECIFICATIONS.

TENSION ON THE ASTM A449 BOLTS THROUGH THE GIRDER WEB SHALL BE SNUG TIGHTENED FOLLOWED BY AN ADDITIONAL ¼ TURN.

THE PLATES, BENT PLATES, AND ANGLES SHALL BE GALVANIZED OR METALLIZED IN ACCORDANCE WITH THE STANDARD SPECIFICATIONS. FOR THERMAL SPRAYED COATINGS (METALLIZATION), SEE SPECIAL PROVISIONS.

FOR METALLIZATION, APPLY A THERMAL SPRAYED COATING WITH A SEAL COAT TO ALL STEEL DIAPHRAGM SURFACES IN ACCORDANCE WITH THE DEPARTMENTS THERMAL SPRAYED COATINGS (METALLIZATION) PROGRAM, THERMAL SPRAYED COATINGS SPECIAL PROVISION AND SECTION 442 OF THE STANDARD SPECIFICATIONS.

GALVANIZE THE HIGH STRENGTH BOLTS, NUTS, WASHERS AND DIRECT TENSION INDICATORS IN ACCORDANCE WITH THE STANDARD SPECIFICATIONS.

USE AN ASTM F436 HARDENED WASHER WITH STANDARD AND SLOTTED HOLES UNDER EACH BOLT HEAD AND NUT.

FOR BOLTS THROUGH THE GIRDER WEB, PROVIDE SUFFICIENT LENGTH OF THREADS ON ALL BOLTS TO ACCOMMODATE WASHERS AND THE THICKNESS OF CONNECTING MEMBER PLUS AT LEAST ¼" PROJECTION BEYOND THE NUT.

INTERMEDIATE DIAPHRAGM ASSEMBLY SHALL COMPLY WITH SECTION 1072 OF THE STANDARD SPECIFICATIONS.

SUBMIT TWO SETS OF WORKING DRAWINGS FOR THE INTERMEDIATE DIAPHRAGM ASSEMBLY FOR REVIEW, COMMENTS AND ACCEPTANCE. AFTER REVIEW, COMMENTS, AND ACCEPTANCE, SUBMIT SEVEN SETS FOR DISTRIBUTION.

IN THE EXTERIOR BAYS, PLACE TEMPORARY STRUTS BETWEEN PRESTRESSED GIRDERS ADJACENT TO THE STEEL DIAPHRAGMS. STRUTS SHALL REMAIN IN PLACE 3 DAYS AFTER CONCRETE IS PLACED.

THE COST OF THE STEEL DIAPHRAGMS AND ASSEMBLIES SHALL BE INCLUDED IN THE UNIT PRICE BID FOR PRESTRESSED CONCRETE GIRDERS.

TABLE

GIRDER TYPE	CHANNEL SIZE	DIM "A"	DIM "B"	DIM "L"
54" FIB	MC 18 x 42.7	2'-3½"	1'-2"	1'-6"

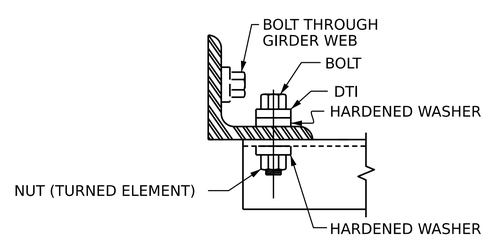

BOLT WITH DTI ASSEMBLY DETAIL

PROJECT NO. B-5716
ROCKINGHAM COUNTY
STATION: 18+80.50 -L-

SHEET 7 OF 7

PREPARED BY
MOTT MACDONALD
930 Main Campus Drive, Suite 200
Raleigh, NC 27606
(919) 553-2253
License No. F-0669
www.mottmac.com

NORTH CAROLINA PROFESSIONAL SEAL 043301 ENGINEER JONATHAN T. WILLIAMS
DocuSigned by:
27-Jun-2024

STATE OF NORTH CAROLINA
DEPARTMENT OF TRANSPORTATION
RALEIGH

STANDARD

INTERMEDIATE STEEL DIAPHRAGMS FOR 54" FIB

REVISIONS						SHEET NO.
NO.	BY:	DATE:	NO.	BY:	DATE:	S01-21
1			3			TOTAL SHEETS
2			4			48

DOCUMENT NOT CONSIDERED FINAL UNLESS ALL SIGNATURES COMPLETED

DRAWN BY :	L. L. BLANKENSHIP	DATE :	6-2023
CHECKED BY :	J. T. WILLIAMS	DATE :	3-2024
DESIGN ENGINEER OF RECORD:	J. T. WILLIAMS	DATE :	3-2024

12/16/2024 4:49:19 PM
R:\Structures\B5716_GEC_01_780140\Plans\401_041_B5716_SWU_G7_S01-21_780140.dgn
KAV06794

Docusign Envelope ID: 94478B89-8910-4784-B75E-FFD00CC24A0F

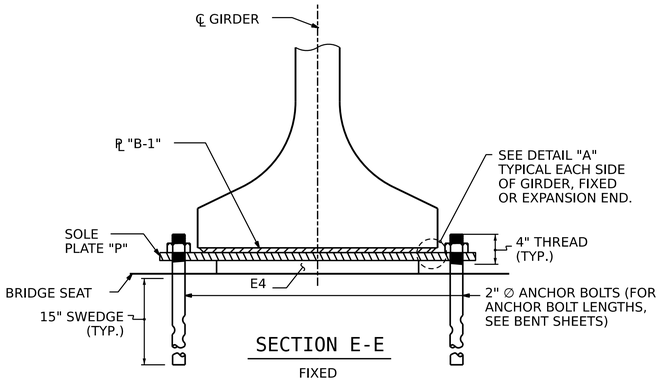

SECTION E-E

FIXED

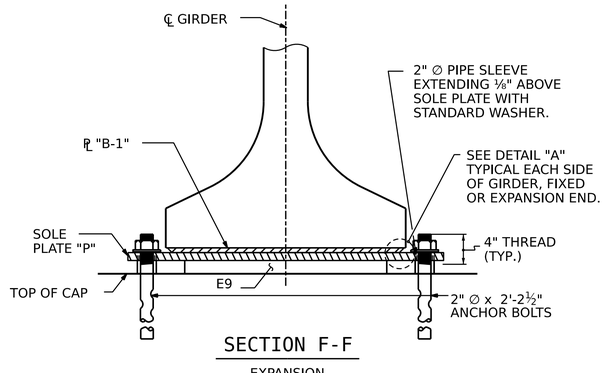

SECTION F-F

EXPANSION

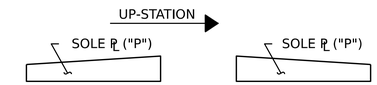

SOLE ℞ PLACEMENT DETAIL

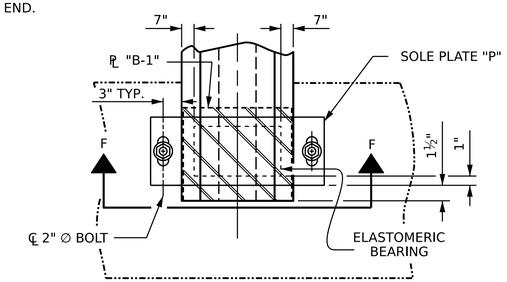

BEARING PLATE AT END BENTS

(EXPANSION)

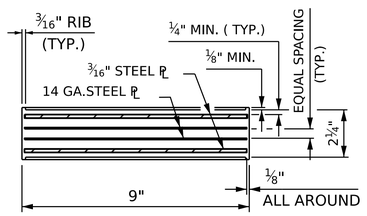

TYPICAL SECTION OF ELASTOMERIC BEARINGS

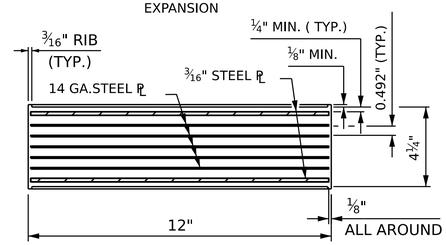

TYPICAL SECTION OF ELASTOMERIC BEARINGS

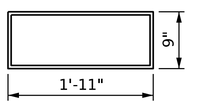

E4 (32 REQ'D)

PLAN VIEW OF ELASTOMERIC BEARING

TYPE V

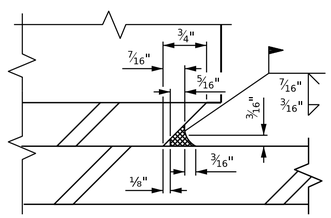

DETAIL "A"

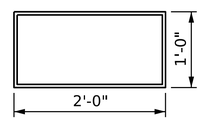

E9 (8 REQ'D)

PLAN VIEW OF ELASTOMERIC BEARING

TYPE X

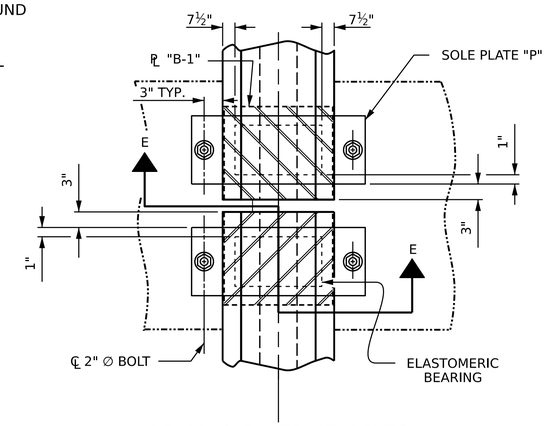

BEARING PLATE AT BENTS

(FIXED)

NOTES:

AT ALL FIXED POINTS OF SUPPORT, NUTS FOR ANCHOR BOLTS ARE TO BE TIGHTENED FINGER TIGHT AND THEN BACKED OFF ½ TURN. THE THREAD OF THE NUT AND BOLT SHALL THEN BE BURRED WITH A SHARP POINTED TOOL.

THE 2" ∅ PIPE SLEEVE SHALL BE CUT FROM SCHEDULE 40 PVC PLASTIC PIPE. THE PVC PLASTIC PIPE SHALL MEET THE REQUIREMENTS OF ASTM D1785.

STEEL SOLE PLATES, ANCHOR BOLTS, NUTS, AND WASHERS SHALL BE GALVANIZED IN ACCORDANCE WITH THE STANDARD SPECIFICATIONS.

PRIOR TO WELDING, GRIND THE GALVANIZED SURFACE OF THE PORTION OF THE EMBEDDED PLATE AND SOLE PLATE THAT ARE TO BE WELDED. AFTER WELDING, DAMAGED GALVANIZED SURFACES SHALL BE REPAIRED IN ACCORDANCE WITH THE STANDARD SPECIFICATIONS.

WHEN WELDING THE SOLE PLATE TO THE EMBEDDED PLATE IN THE GIRDER, USE TEMPERATURE INDICATING WAX PENS, OR OTHER SUITABLE MEANS, TO ENSURE THAT THE TEMPERATURE OF THE SOLE PLATE DOES NOT EXCEED 300°F. TEMPERATURES ABOVE THIS MAY DAMAGE THE ELASTOMER.

SOLE PLATE "P", BOLTS, NUTS, WASHERS, AND PIPE SLEEVE SHALL BE INCLUDED IN THE PAY ITEM FOR PRESTRESSED CONCRETE GIRDERS.

ANCHOR BOLTS SHALL MEET THE REQUIREMENTS OF ASTM A449. NUTS SHALL MEET THE REQUIREMENTS OF AASHTO M291-DH OR AASHTO M292-2H. WASHERS SHALL MEET THE REQUIREMENTS OF AASHTO M293. SHOP DRAWINGS ARE NOT REQUIRED FOR ANCHOR BOLT, NUTS AND WASHERS. SHOP INSPECTION IS REQUIRED.

ALL SURFACES OF BEARING PLATES SHALL BE SMOOTH AND STRAIGHT.

THE ELASTOMER IN THE STEEL REINFORCED BEARINGS SHALL HAVE A SHEAR MODULUS OF 0.160 KSI, IN ACCORDANCE WITH AASHTO M251.

FOR STEEL REINFORCED ELASTOMERIC BEARINGS, SEE STANDARD SPECIFICATIONS.

ALL SOLE PLATES SHALL BE AASHTO M270 GRADE 36.

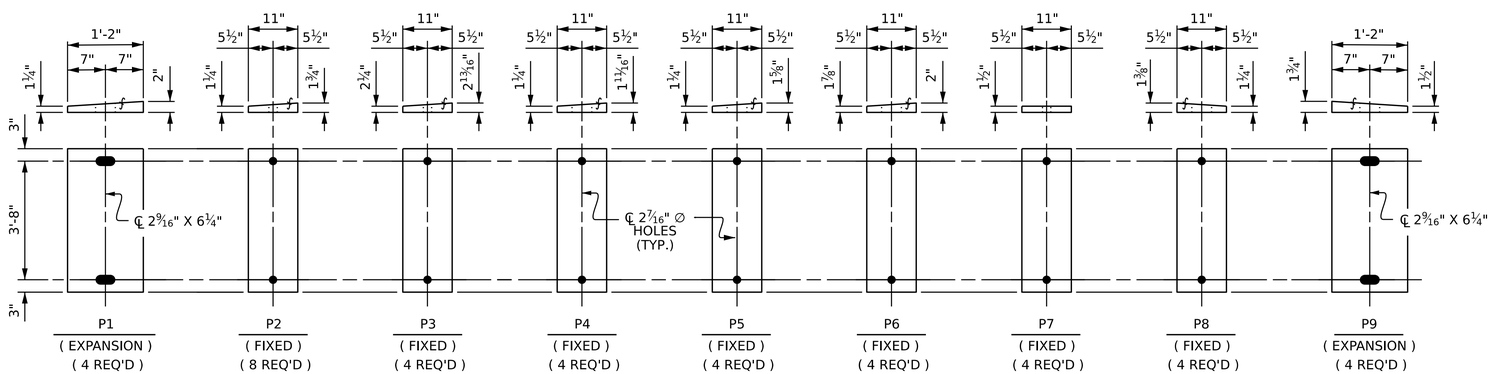

SOLE PLATE DETAILS ("P")

MAXIMUM ALLOWABLE SERVICE LOADS	
D.L.+L.L.(NO IMPACT)	
TYPE V	365 K
TYPE X	520 K

PROJECT NO. B-5716

ROCKINGHAM COUNTY

STATION: 18+80.50 -L-

PREPARED BY

MOTT MACDONALD

930 Main Campus Drive, Suite 200
Raleigh, NC 27606
(919) 552-2253
License No. F-0669
www.mottmac.com

NORTH CAROLINA PROFESSIONAL SEAL 043301 PROJECT ENGINEER JOHN T. WILLIAMS

27-Jun-2025

STATE OF NORTH CAROLINA
DEPARTMENT OF TRANSPORTATION
RALEIGH

ELASTOMERIC BEARING DETAILS

REVISIONS						SHEET NO.
NO.	BY:	DATE:	NO.	BY:	DATE:	S01-22
1			3			TOTAL SHEETS
2			4			48

DRAWN BY : L. L. BLANKENSHIP DATE : 6-2023
CHECKED BY : J. T. WILLIAMS DATE : 2-2024
DESIGN ENGINEER OF RECORD: J. T. WILLIAMS DATE : 2-2024

DOCUMENT NOT CONSIDERED FINAL UNLESS ALL SIGNATURES COMPLETED

12/16/2024 4:42:21 PM
R:\Structures\B86.01.780140\Plans\401_043_B5716_SMU_BG_S01-22_780140.dgn
KAVI06794

Docusign Envelope ID: 94478B89-8910-4784-B75E-FFD00CC24A0F

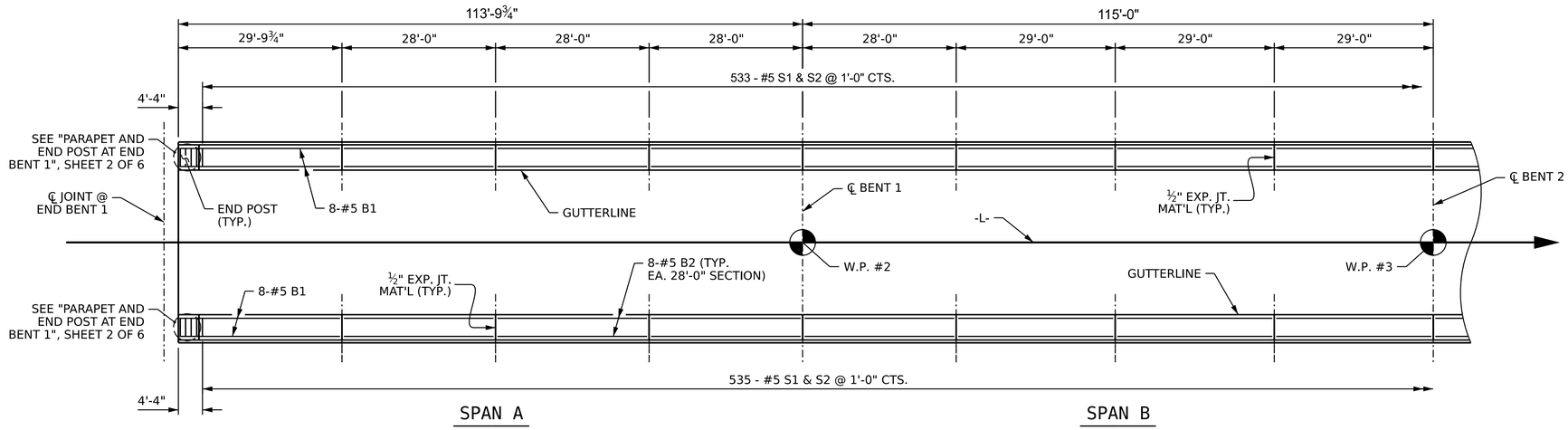

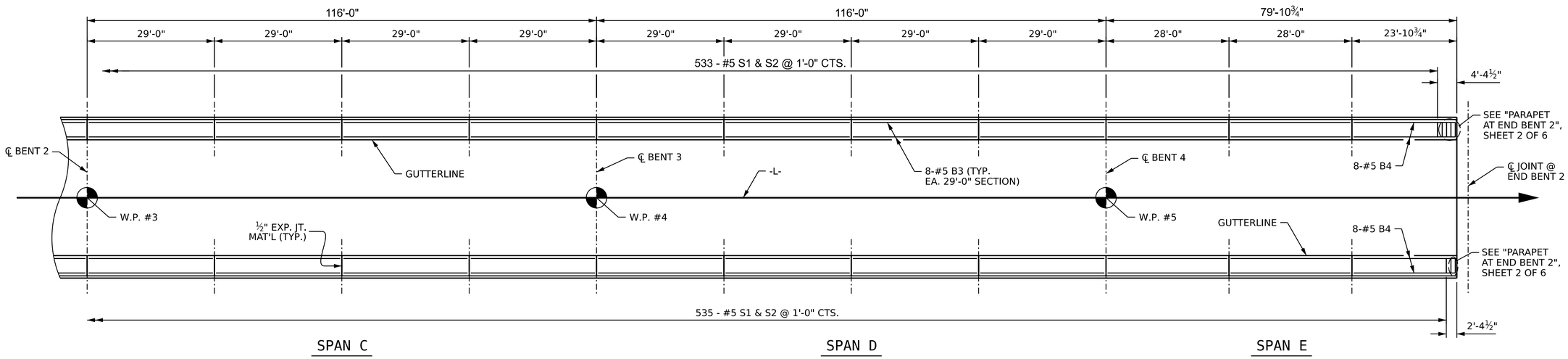

PLAN OF PARAPET ON BRIDGE

(DIMENSIONS ARE TYP. EA. SIDE, EXCEPT AS SHOWN)

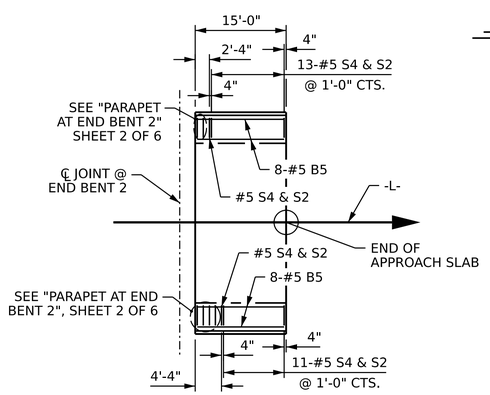

PLAN OF PARAPET ON APPROACH SLAB @ END BENT 2

(DIMENSIONS ARE TYP. EA. SIDE, EXCEPT AS SHOWN)

PROJECT NO. B-5716

ROCKINGHAM COUNTY

STATION: 18+80.50 -L-

SHEET 1 OF 6

PREPARED BY

MOTT MACDONALD
930 Main Campus Drive, Suite 200
Raleigh, NC 27606
(919) 532-2233
License No. F-0669
www.mottmac.com

NORTH CAROLINA PROFESSIONAL SEAL 043301 ENGINEER JONATHAN T. WILLIAMS
27-Jun-2024

STATE OF NORTH CAROLINA
DEPARTMENT OF TRANSPORTATION
RALEIGH

PLAN OF CONCRETE PARAPETS

REVISIONS								SHEET NO.
NO.	BY:	DATE:	NO.	BY:	DATE:			S01-23
1			3					TOTAL SHEETS
2			4					48

DOCUMENT NOT CONSIDERED FINAL UNLESS ALL SIGNATURES COMPLETED

DRAWN BY :	L. L. BLANKENSHIP	DATE :	8-2023
CHECKED BY :	J. T. WILLIAMS	DATE :	2-2024
DESIGN ENGINEER OF RECORD:	J. T. WILLIAMS	DATE :	2-2024

12/16/2024 4:46:23 PM
R:\Structures\B6.01.780140\Plans\401_045_B5716_SMU_2MR_S01-23_780140.dgn
KAV06794

Docusign Envelope ID: 94478B89-8910-4784-B75E-FFD00CC24A0F

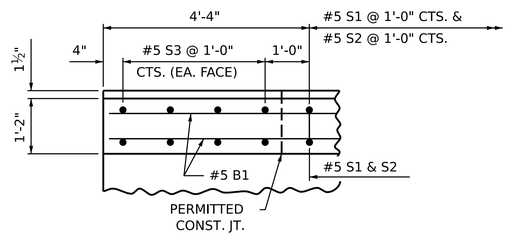

PLAN OF PARAPET

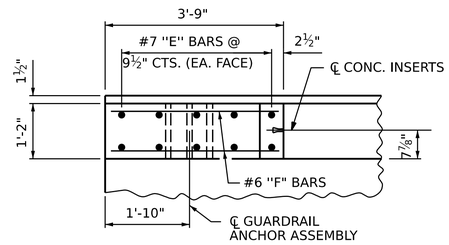

PLAN OF END POST

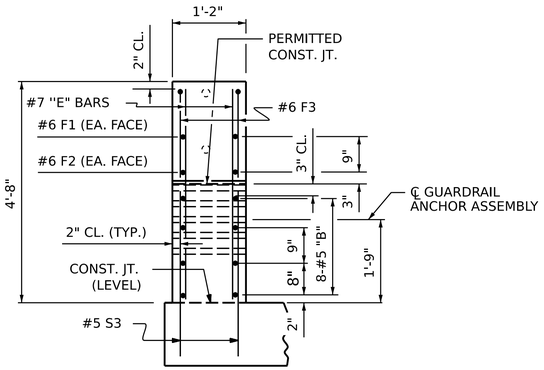

END VIEW

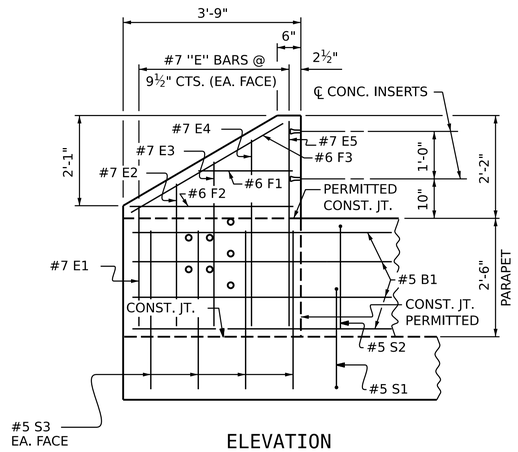

ELEVATION

PARAPET AND END POST AT END BENT 1

LEFT SIDE SHOWN, RIGHT SIDE SIMILAR

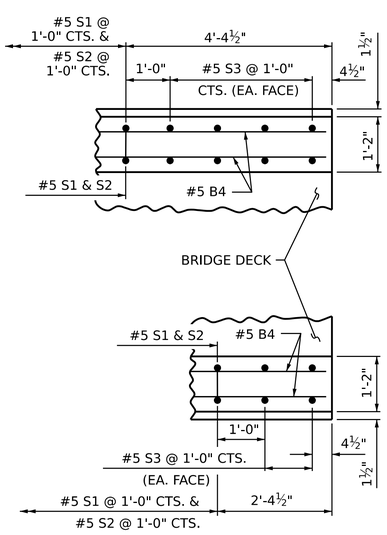

PLAN OF PARAPET

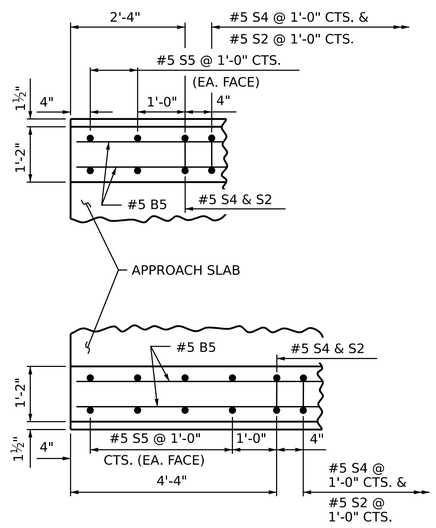

PLAN OF PARAPET

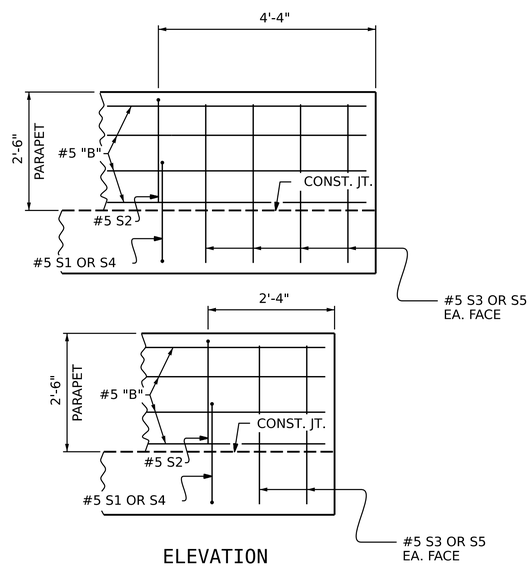

ELEVATION

PARAPET AT END BENT 2

NOTES:

FOAM JOINT SEAL IS REQUIRED, THE JOINT IN THE DECK SHALL BE SAWED PRIOR TO THE CASTING OF BARRIER RAIL.

ALL REINFORCING STEEL IN PARAPETS AND END POSTS SHALL BE EPOXY COATED.

THE #5 S3 AND S5 BARS SHALL BE INSTALLED, USING AN ADHESIVE ANCHORING SYSTEM, AFTER SAWING THE JOINT. THE YIELD LOAD FOR THE #5 S3 BARS IS 18.6 KIPS. FIELD TESTING FOR THE ADHESIVE BONDING SYSTEM IS NOT REQUIRED.

FOR DETAIL OF CONCRETE INSERT AND METAL RAIL ANCHOR ASSEMBLY, SEE "END OF RAIL DETAIL" SHEET.

GROOVED CONTRACTION JOINTS, ½" IN DEPTH, SHALL BE TOOLED IN ALL EXPOSED FACES OF THE PARAPET AND IN ACCORDANCE WITH ARTICLE 825-10(B) OF THE STANDARD SPECIFICATIONS. A CONTRACTION JOINT SHALL BE LOCATED AT EACH THIRD POINT BETWEEN PARAPET EXPANSION JOINTS. ONLY ONE CONTRACTION JOINT IS REQUIRED AT MIDPOINT OF PARAPET SEGMENTS LESS THAN 20 FEET IN LENGTH AND NO CONTRACTION JOINTS ARE REQUIRED FOR THOSE SEGMENTS LESS THAN 10 FEET IN LENGTH.

PARAPET IN A CONTINUOUS UNIT SHALL NOT BE CAST UNTIL ALL SLAB CONCRETE IN THE UNIT HAS BEEN CAST AND HAS REACHED A MINIMUM COMPRESSIVE STRENGTH OF 3,000 PSI.

ATTACHMENT FOR ORNAMENTAL FENCE POST NOT SHOWN, SEE ORNAMENTAL FENCE SHEET.

BAR TYPE

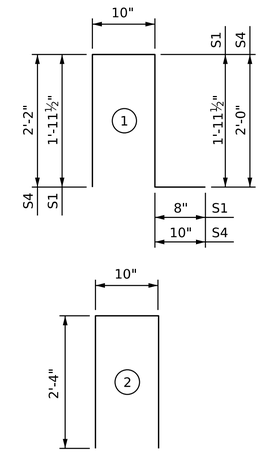

ALL BAR DIMENSIONS ARE OUT TO OUT

BILL OF MATERIAL

FOR 2 PARAPETS & 2 END POSTS

BAR	NO.	SIZE	TYPE	LENGTH	WEIGHT
* B1	16	#5	STR	29'-5"	491
* B2	96	#5	STR	27'-7"	2762
* B3	176	#5	STR	28'-7"	5247
* B4	16	#5	STR	23'-6"	392
* B5	16	#5	STR	14'-8"	245
* E1	4	#7	STR	2'-6"	20
* E2	4	#7	STR	3'-0"	25
* E3	4	#7	STR	3'-6"	29
* E4	4	#7	STR	4'-0"	33
* E5	4	#7	STR	4'-4"	35
* F1	4	#6	STR	1'-10"	11
* F2	4	#6	STR	3'-0"	18
* F3	4	#6	STR	3'-7"	22
* S1	1068	#5	1	5'-5"	6034
* S2	1094	#5	2	5'-6"	6276
* S3	28	#5	STR	3'-0"	88
* S4	26	#5	1	5'-10"	158
* S5	12	#5	STR	3'-0"	38

* EPOXY COATED REINFORCING STEEL	21,924 LBS.
CLASS AA CONCRETE	120.5 C.Y.
1'-2" X 2'-6" CONCRETE PARAPET	1111.42 L.F.

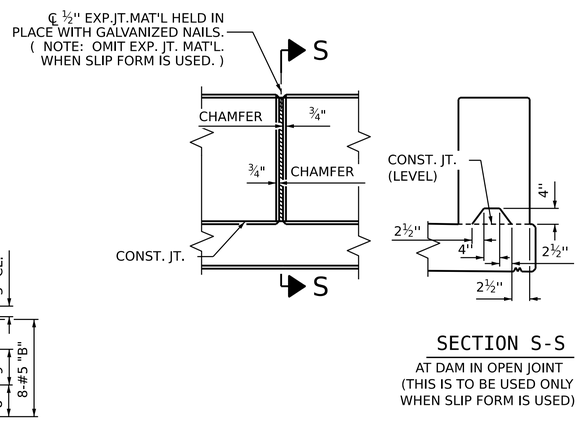

SECTION S-S

AT DAM IN OPEN JOINT
(THIS IS TO BE USED ONLY
WHEN SLIP FORM IS USED)

ELEVATION AT EXPANSION JOINTS

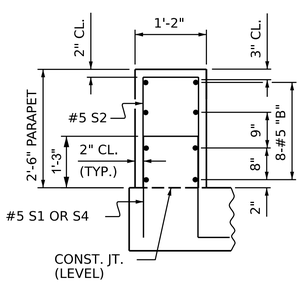

SECTION THROUGH PARAPET

PROJECT NO. B-5716

ROCKINGHAM COUNTY

STATION: 18+80.50 -L-

SHEET 2 OF 6

PREPARED BY

MOTT MACDONALD
930 Main Campus Drive, Suite 200
Raleigh, NC 27606
(919) 532-2232
License No. F-0669
www.mottmac.com

NORTH CAROLINA PROFESSIONAL SEAL 043301 ENGINEER JOHNATHAN T. WILLIAMS
27-Jun-2025

STATE OF NORTH CAROLINA
DEPARTMENT OF TRANSPORTATION
RALEIGH

PARAPET DETAILS

REVISIONS							SHEET NO.
NO.	BY:	DATE:	NO.	BY:	DATE:		S01-24
1			3				TOTAL SHEETS
2			4				48

DOCUMENT NOT CONSIDERED FINAL UNLESS ALL SIGNATURES COMPLETED

DRAWN BY :	L. L. BLANKENSHIP	DATE :	8-2023
CHECKED BY :	J. T. WILLIAMS	DATE :	2-2024
DESIGN ENGINEER OF RECORD:	J. T. WILLIAMS	DATE :	2-2024

2/18/2025 9:53:03 AM
C:\Users\kblanking\mmm\r60.transit\wi57077\d0171488\401.047.B5716.SMU.2MR.S01-24.780140.dgn
WI57077

Docusign Envelope ID: 94478B89-8910-4784-B75E-FFD00CC24A0F

NOTES:

RAIL POSTS ON CONCRETE BARRIER RAIL WITH MOMENT SLAB BEHIND MSE RETAINING WALL NOT SHOWN. SEE RETAINING WALL SHEETS W5 & W6.

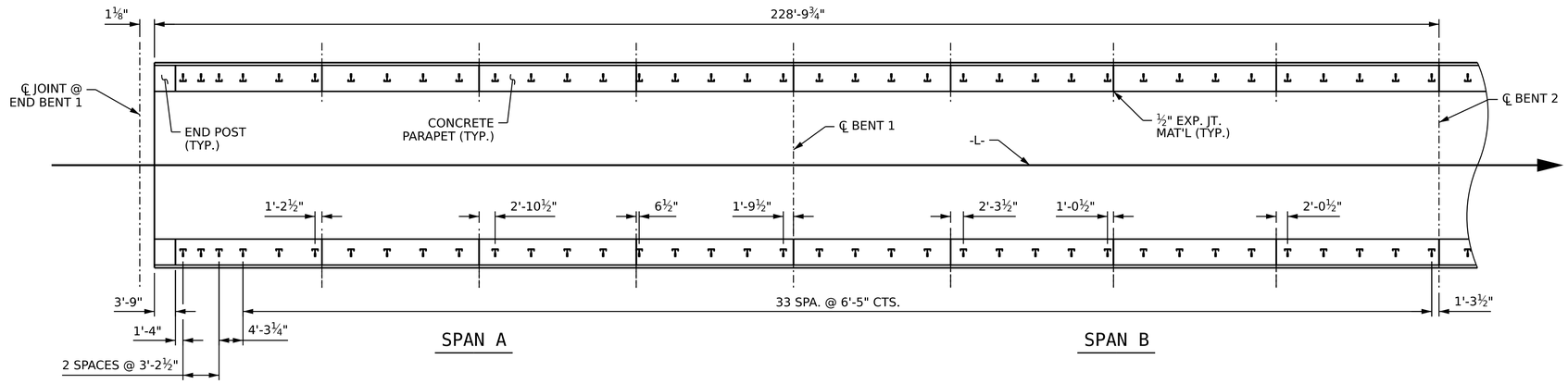

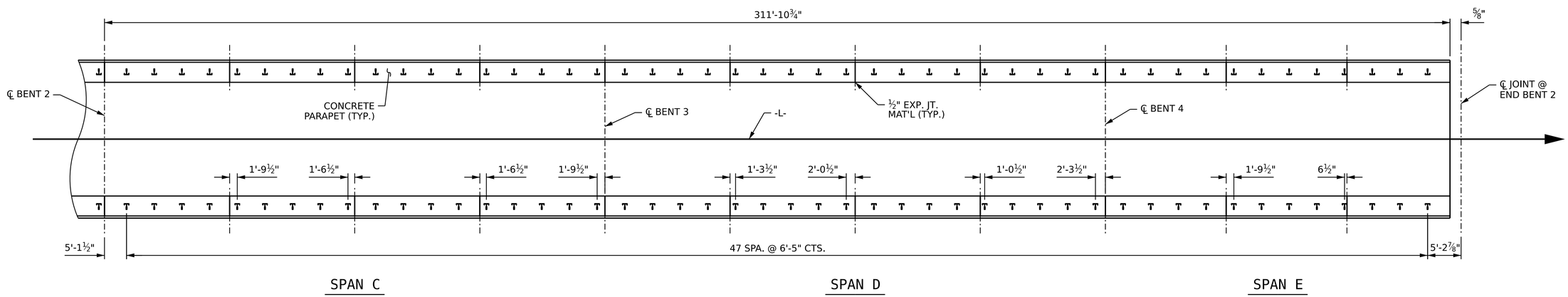

PLAN OF RAIL POST SPACINGS ON BRIDGE

(DIMENSIONS ARE TYP. EA. SIDE)

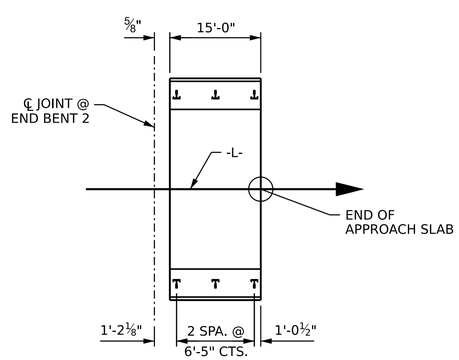

PLAN OF RAIL POST SPACINGS ON APPROACH SLAB

(DIMENSIONS ARE TYP. EA. SIDE)

PROJECT NO. B-5716

ROCKINGHAM COUNTY

STATION: 18+80.50 -L-

SHEET 3 OF 6

PREPARED BY

MOTT MACDONALD
930 Main Campus Drive, Suite 200
Raleigh, NC 27606
(919) 552-2233
License No. F-0669
www.mottmac.com

NORTH CAROLINA PROFESSIONAL SEAL 043301 ENGINEER JONATHAN T. WILLIAMS
27-Jun-2024

STATE OF NORTH CAROLINA
DEPARTMENT OF TRANSPORTATION
RALEIGH

STANDARD

RAIL POST SPACINGS AND END OF RAIL DETAILS

FOR TWO BAR METAL RAILS

REVISIONS						SHEET NO.
NO.	BY:	DATE:	NO.	BY:	DATE:	S01-25
1			3			TOTAL SHEETS
2			4			48

DOCUMENT NOT CONSIDERED FINAL UNLESS ALL SIGNATURES COMPLETED

DRAWN BY :	L. L. BLANKENSHIP	DATE :	7-2023
CHECKED BY :	J. T. WILLIAMS	DATE :	2-2024
DESIGN ENGINEER OF RECORD:	J. T. WILLIAMS	DATE :	2-2024

3/11/2025 11:23:05 AM
C:\Users\jwilliams\Documents\dll_Transit\wl57077\d017148\401_049_B5716_SMU_2MR_S01-25_780140.dgn
WL57077

Docusign Envelope ID: 94478B89-8910-4784-B75E-FFD00CC24A0F

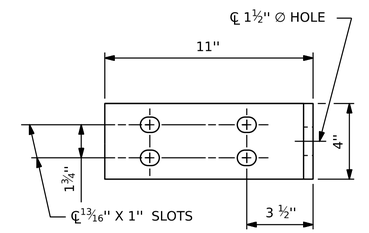

ELEVATION

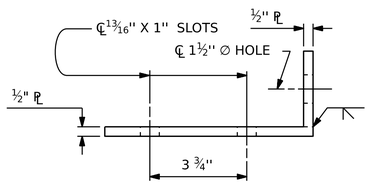

TOP VIEW

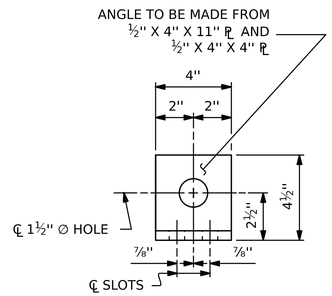

END VIEW (FIX AND EXP.)

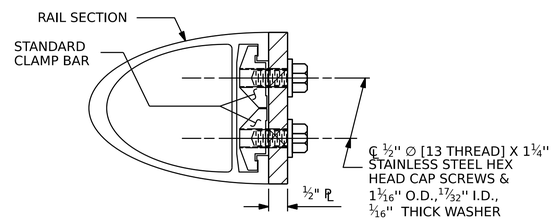

SECTION H-H (FIX)

FIXED

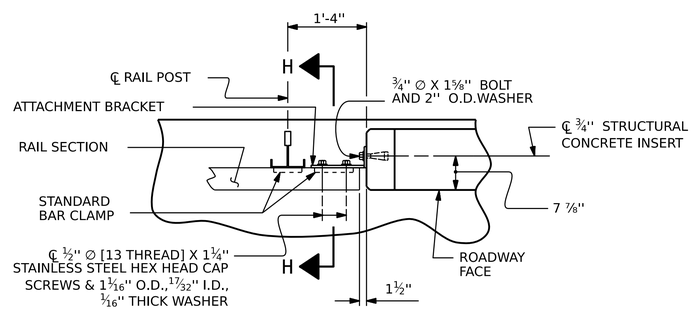

PLAN - RAIL AND END POST

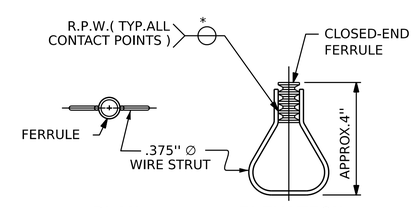

PLAN ELEVATION

STRUCTURAL CONCRETE INSERT

* EACH WELDED ATTACHMENT OF WIRE TO FERRULE SHALL DEVELOP THE TENSILE STRENGTH OF THE WIRE.

NOTES:

STRUCTURAL CONCRETE INSERT

THE STRUCTURAL CONCRETE INSERT ASSEMBLY SHALL CONSIST OF THE FOLLOWING COMPONENTS:

A. FERRULES SHALL BE MADE FROM STEEL MEETING THE REQUIREMENTS OF AASHTO M169, GRADE 12L14 AND SHALL HAVE A MINIMUM LENGTH OF THREADS OF 1½''.

B. 1 -¾'' ∅ X 1⅝'' BOLT WITH WASHER. BOLT SHALL CONFORM TO THE REQUIREMENTS OF ASTM A307. BOLT AND WASHER SHALL BE GALVANIZED. (AT THE CONTRACTOR'S OPTION, STAINLESS STEEL BOLT AND WASHER MAY BE USED AS AN ALTERNATE FOR THE ¾'' ∅ X 1⅝'' GALVANIZED BOLT AND WASHER. THEY SHALL CONFORM TO OR EXCEED THE MECHANICAL REQUIREMENTS OF ASTM A307. THE USE OF THIS ALTERNATE SHALL BE APPROVED BY THE ENGINEER.)

C. WIRE STRUT SHOWN IN THE CONCRETE INSERT ASSEMBLY DETAIL IS THE MINIMUM ALLOWABLE SIZE AND SHALL HAVE A MINIMUM TENSILE STRENGTH OF 100,000 PSI. AS AN OPTION, A 7⁄16'' ∅ WIRE STRUT WITH A MINIMUM TENSILE STRENGTH OF 90,000 PSI IS ACCEPTABLE.

NOTES:

METAL RAIL TO END POST CONNECTION

THE METAL RAIL TO END POST CONNECTION SHALL CONSIST OF THE FOLLOWING COMPONENTS:

A. ½'' PLATES SHALL CONFORM TO ASTM A36 GRADE 36 AND SHALL BE GALVANIZED AFTER FABRICATION.

B. ¾'' STRUCTURAL CONCRETE INSERT SHALL HAVE A WORKING LOAD SHEAR CAPACITY OF 4800 LBS. THE FERRULES SHALL ENGAGE A ¾''∅ X 1⅝'' BOLT WITH 2'' O.D. WASHER IN PLACE. THE ¾''∅ X 1⅝'' BOLT SHALL HAVE N. C. THREADS.

C. CAP SCREWS FOR RAIL ATTACHMENT TO ANGLE SHALL CONFORM TO THE REQUIREMENTS OF ASTM F593 ALLOY 305 STAINLESS STEEL. CAP SCREWS TO BE CENTERED IN SLOTS AT 60°F.

D. STANDARD CLAMP BARS (SEE METAL RAIL SHEET).

E. ½'' ∅ PIPE SLEEVES (IF REQUIRED) TO BE GALVANIZED.

THE COST OF THE STANDARD CLAMP BARS AND CAP SCREWS USED IN THE METAL RAIL TO END POST CONNECTION SHALL BE INCLUDED IN THE UNIT CONTRACT PRICE BID FOR LINEAR FEET OF 1 OR 2 BAR METAL RAILS.

THE ¾'' STRUCTURAL CONCRETE INSERT WITH BOLT SHALL BE ASSEMBLED IN THE SHOP.

THE COST OF THE ¾'' STRUCTURAL CONCRETE INSERT ASSEMBLY, AND THE ½'' PLATES COMPLETE IN PLACE SHALL BE INCLUDED IN THE VARIOUS PAY ITEMS.

THE CONTRACTOR, AT HIS OPTION, MAY USE AN ADHESIVE BONDING SYSTEM IN LIEU OF THE STRUCTURAL CONCRETE INSERT EMBEDDED IN THE END POST. IF THE ADHESIVE BONDING SYSTEM IS USED, THE ¾'' ∅ X 1⅝'' BOLT WITH WASHER SHALL BE REPLACED WITH A ¾''∅ X 6½'' BOLT AND 2'' O.D. WASHER. ALL SPECIFICATIONS THAT APPLY TO THE ¾'' ∅ X 1⅝'' BOLT SHALL APPLY TO THE ¾''∅ X 6 ½'' BOLT. FIELD TESTING OF THE ADHESIVE BONDING SYSTEM IS NOT REQUIRED.

DETAILS FOR ATTACHING METAL RAIL TO END POST

PROJECT NO. B-5716
ROCKINGHAM COUNTY
STATION: 18+80.50 -L-

SHEET 4 OF 6

PREPARED BY
MOTT MACDONALD
930 Main Campus Drive, Suite 200
Raleigh, NC 27606
(919) 552-2253
License No. F-0669
www.mottmac.com

NORTH CAROLINA PROFESSIONAL SEAL 043301 ENGINEER JOHN T. WILLIAMS
CERTIFICATE OF AUTHORITY
27-Jun-2025

STATE OF NORTH CAROLINA
DEPARTMENT OF TRANSPORTATION
RALEIGH

STANDARD
END OF RAIL DETAILS
FOR TWO BAR METAL RAILS

REVISIONS						SHEET NO.
NO.	BY:	DATE:	NO.	BY:	DATE:	S01-26
1			3			TOTAL SHEETS
2			4			48

DOCUMENT NOT CONSIDERED FINAL UNLESS ALL SIGNATURES COMPLETED

DRAWN BY :	L. L. BLANKENSHIP	DATE :	6-2023
CHECKED BY :	J. T. WILLIAMS	DATE :	2-2024
DESIGN ENGINEER OF RECORD:	J. T. WILLIAMS	DATE :	2-2024

12/15/2024 4:42:28 PM
R:\Structures\BRG_01_780140\Plans\401_051_B5716_SMU_2MR_S01-26_780140.dgn
KAYI06794

Docusign Envelope ID: 94478B89-8910-4784-B75E-FFD00CC24A0F

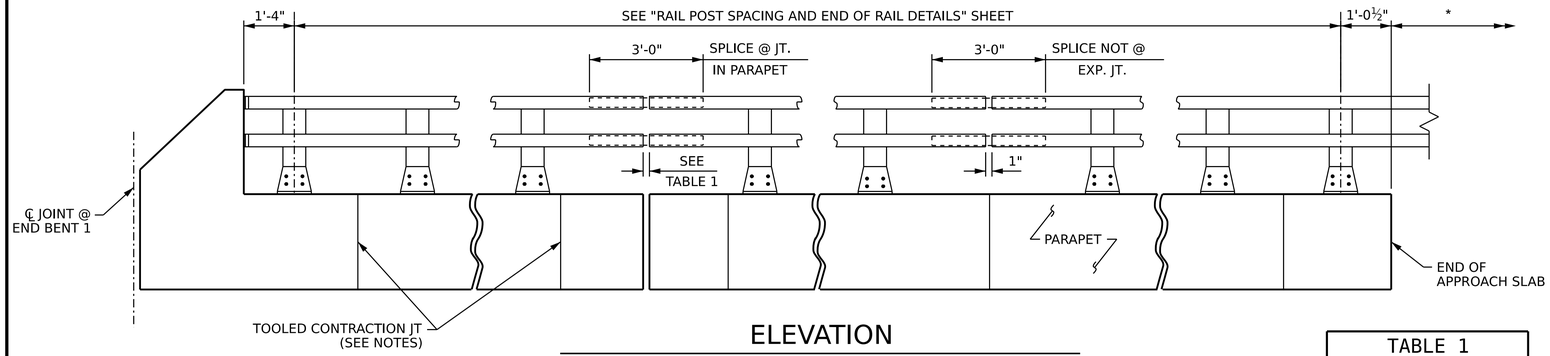

ELEVATION

NOTE: FOR ATTACHMENT OF METAL RAIL TO END POST, SEE SHEET 4 OF 6.

ORNAMENTAL FENCE NOT SHOWN, SEE ORNAMENTAL FENCE SHEET.

* THE LIMITS OF 2 BAR METAL RAIL CONTINUE ON THE CONCRETE BARRIER RAIL WITH MOMENT SLAB BEHIND MSE WALL, SEE RETAINING WALL SHEETS W-5 AND W-6 FOR LIMITS AND PAY ITEM.

TABLE 1	
℄ EXP. JT. @	RAIL OPENING
END BENT 2	1¼"
ALL OTHER LOCATIONS	1"

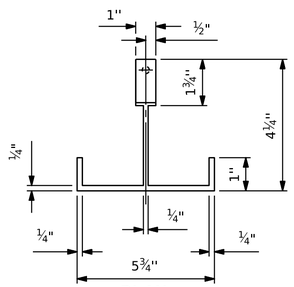

PLAN

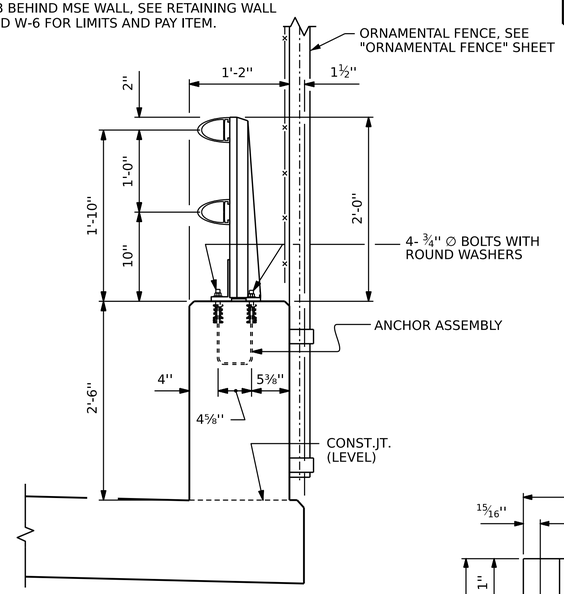

SECTION THRU PARAPET AND RAIL

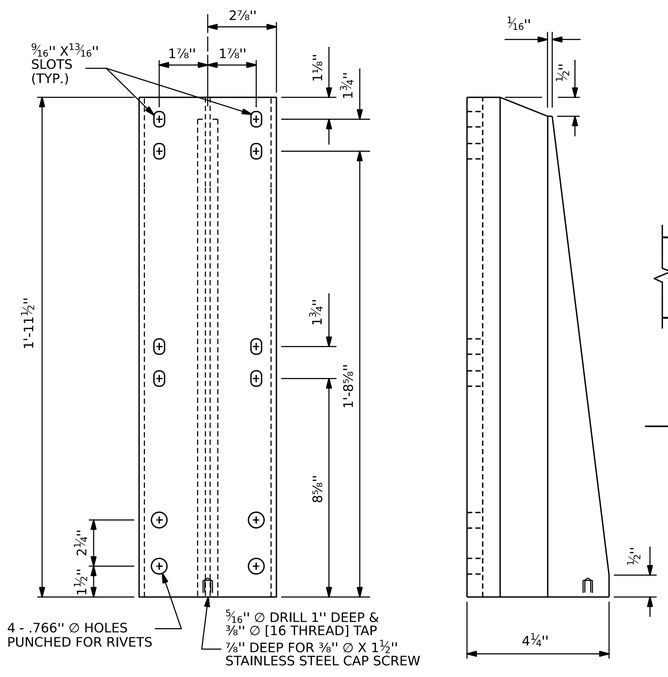

FRONT ELEVATION

SIDE ELEVATION

DETAILS OF POST

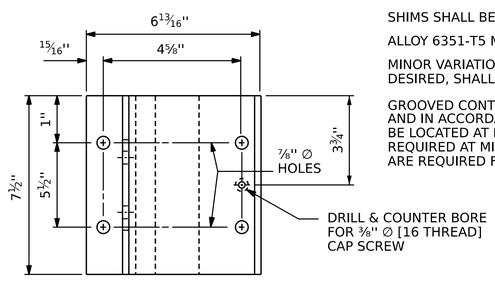

PLAN

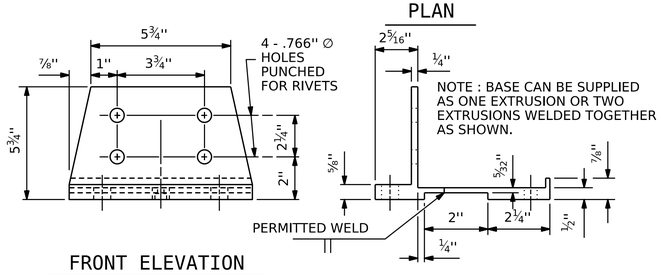

FRONT ELEVATION

SIDE ELEVATION

POST BASE DETAILS

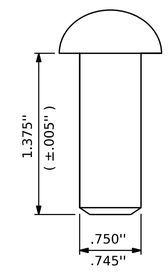

RIVET DETAIL

NOTES:

AT THE CONTRACTOR'S OPTION, METAL RAIL MAY BE EITHER ALUMINUM OR GALVANIZED STEEL IN ACCORDANCE WITH THE REQUIREMENTS OF THE GENERAL NOTES AND THE FOLLOWING SPECIFICATIONS FOR THE ALTERNATE MATERIALS; HOWEVER, THE CONTRACTOR WILL BE REQUIRED TO USE THE SAME RAIL MATERIAL ON ALL STRUCTURES ON THE PROJECT FOR WHICH METAL RAIL IS DESIGNATED.

UNLESS OTHERWISE REQUIRED IN THE CONTRACT DOCUMENTS, THE CONTRACTOR HAS THE OPTION TO USE AN ALTERNATE TO THE 2 BAR METAL RAIL. THE ALTERNATE RAIL SHALL MEET THE REQUIREMENTS OF THE AASHTO LRFD BRIDGE DESIGN SPECIFICATIONS AND MUST BE LISTED ON THE DEPARTMENT'S APPROVED PRODUCTS LIST (APL) UNDER "2 BAR METAL RAIL ALTERNATE". ADJUSTMENTS TO THE CONCRETE PARAPET WILL NOT BE ALLOWED.

ALUMINUM RAILS

MATERIAL FOR POSTS, BASES AND RAILS, EXPANSION BARS AND CLAMP BARS SHALL BE ASTM B-221 ALLOY 6061-T6.

MATERIAL FOR RIVETS SHALL BE ASTM B316 ALLOY 6061-T6. RIVETS SHALL BE STANDARD BUTTON HEAD AND CONE POINT COLD DRIVEN AS PER DRAWING.

THE BASE OF RAIL POSTS, OR ANY OTHER ALUMINUM SURFACE IN CONTACT WITH CONCRETE SHALL BE THOROUGHLY COATED WITH AN ALUMINUM IMPREGNATED CAULKING COMPOUND OF APPROVED QUALITY.

MATERIAL FOR SHIMS TO BE ASTM B209 ALLOY 6061-T6.

GALVANIZED STEEL RAILS

MATERIAL AND GALVANIZING ARE TO CONFORM TO THE FOLLOWING SPECIFICATIONS:

POST, POST BASES, RAILS, EXPANSION BARS AND CLAMP BARS: ASTM A123 GRADE 36 STRUCTURAL STEEL - GALVANIZED TO ASTM A123.

RIVETS: RIVETS SHALL MEET THE REQUIREMENTS OF ASTM A502 FOR GRADE 1 RIVETS.

THE CUT ENDS OF GALVANIZED STEEL RAILING, AFTER GRINDING SMOOTH SHALL BE GIVEN TWO COATS OF ZINC RICH PAINT MEETING THE REQUIREMENTS OF FEDERAL SPECIFICATION MIL-P-26915 USAF TYPE 1, OR OF FEDERAL SPECIFICATIONS TT-P-641.

SHIMS: SHIMS SHALL MEET THE REQUIREMENTS OF ASTM A1011 FOR GRDAE 36, 40, 45 OR ASTM A1008 FOR GRADE C AND SHALL BE GALVANIZED IN ACCORDANCE WITH ASTM A123.

RAIL CAPS: RAIL CAPS SHALL MEET THE REQUIREMENTS OF ASTM A1011 FOR GRADE 36, 40, 45 OR ASTM A1008 FOR GRADE C AND SHALL BE GALVANIZED IN ACCORDANCE WITH ASTM A123.

GENERAL NOTES

RAILING SHALL BE CONTINUOUS FROM END POST TO END POST OF BRIDGE. EACH JOINT IN RAIL LENGTH SHALL BE SPLICED AS DETAILED. PANEL LENGTHS OF RAIL SHALL BE ATTACHED TO A MINIMUM OF THREE POSTS.

FOR END OF RAIL TO CLEAR FACE OF CONCRETE END POST DIMENSION, SEE STANDARD NO. BMR2.

CAP SCREWS SHALL BE ASTM F593 ALLOY 305 STAINLESS STEEL. WASHERS SHALL MEET THE REQUIREMENTS OF ASTM F844 EXCEPT THEY SHALL BE MADE FROM ALLOY 304 STAINLESS STEEL.

CERTIFIED MILL REPORTS ARE REQUIRED FOR RAILS AND POSTS. SHOP INSPECTION IS NOT REQUIRED.

METAL RAIL POSTS SHALL BE SET NORMAL TO CURB GRADE.

METHOD OF MEASUREMENT FOR METAL RAILS: FOR LENGTH OF METAL RAILS TO BE PAID FOR, SEE THE STANDARD SPECIFICATIONS.

CURVED RAIL USAGE: WHERE RAILS ARE TO BE USED ON BRIDGES ON HORIZONTAL AND/OR VERTICAL CURVATURE THE CONTRACTOR MAY, AT HIS OPTION, HAVE THE REQUIRED CURVATURE IN THE RAIL FORMED IN THE SHOP OR IN THE FIELD. IN EITHER EVENT, THE RAIL SHALL CONFORM WITHOUT BUCKLING OR KINKING TO THE REQUIRED CURVATURE IN A UNIFORM MANNER ACCEPTABLE TO THE ENGINEER.

TO ENSURE FUTURE IDENTIFICATION OF THE FABRICATOR, A PERMANENT IDENTIFYING MARK SHALL BE PLACED ON EACH POST. THE METHOD OF MARKING AND LOCATION SHALL BE SUCH THAT IT DOES NOT DETRACT FROM THE APPEARANCE OF THE POST, BUT REMAINS VISIBLE AFTER RAIL PLACEMENT.

SHIMS SHALL BE USED AS NECESSARY FOR POST ALIGNMENT.

ALLOY 6351-T5 MAY BE SUBSTITUTED FOR ALLOY 6061-T6 WHERE APPLICABLE.

MINOR VARIATIONS IN DETAILS OF METAL RAIL WILL BE CONSIDERED. DETAILS OF SUCH VARIATIONS, IF DESIRED, SHALL BE SUBMITTED FOR APPROVAL.

GROOVED CONTRACTION JOINTS, ½" IN DEPTH, SHALL BE TOOLED IN ALL EXPOSED FACES OF THE PARAPET AND IN ACCORDANCE WITH ARTICLE 825-10(B) OF THE STANDARD SPECIFICATIONS. A CONTRACTION JOINT SHALL BE LOCATED AT EACH THIRD POINT BETWEEN PARAPET EXPANSION JOINTS. ONLY ONE CONTRACTION JOINT IS REQUIRED AT MIDPOINT OF PARAPET SEGMENTS LESS THAN 20 FEET IN LENGTH AND NO CONTRACTION JOINTS ARE REQUIRED FOR THOSE SEGMENTS LESS THAN 10 FEET IN LENGTH.

PAY LENGTH = 1104.13 LIN. FT.

PROJECT NO. B-5716

ROCKINGHAM COUNTY

STATION: 18+80.50 -L-

SHEET 5 OF 6

PREPARED BY

MOTT MACDONALD
930 Main Campus Drive, Suite 200
Raleigh, NC 27606
(919) 553-2253
License No. F-0669
www.mottmac.com

NORTH CAROLINA PROFESSIONAL SEAL 043301 PROJECT ENGINEER J. TIMOTHY WILLIAMS
CFBB0A0A0A0A0A0A...
27-Jun-2024

STATE OF NORTH CAROLINA
DEPARTMENT OF TRANSPORTATION
RALEIGH

STANDARD

2 BAR METAL RAIL

REVISIONS								SHEET NO.
NO.	BY:	DATE:	NO.	BY:	DATE:			S01-27
1			3					TOTAL SHEETS
2			4					48

DRAWN BY : L. L. BLANKENSHIP DATE : 6-2023
CHECKED BY : J. T. WILLIAMS DATE : 2-2024
DESIGN ENGINEER OF RECORD: J. T. WILLIAMS DATE : 2-2024

DOCUMENT NOT CONSIDERED FINAL UNLESS ALL SIGNATURES COMPLETED

3/7/2025 12:21:12 PM
C:\Users\kingv\mmc-oil\r-onsite\wi57077\d0171488\01.053.B5716_SMU_2MR_S01-27_780140.dgn
WI157077

Docusign Envelope ID: 94478B89-8910-4784-B75E-FFD00CC24A0F

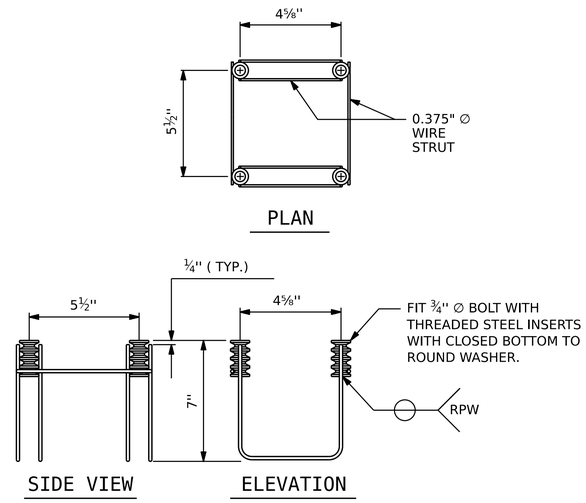

4-BOLT METAL RAIL ANCHOR ASSEMBLY

(176 ASSEMBLIES REQUIRED FOR POSTS LOCATED ON BRIDGE AND APPROACH SLAB)

(ADDITIONAL ASSEMBLIES ARE REQUIRED FOR POSTS ATOP CONCRETE BARRIER RAIL WITH MOMENT SLAB BEHIND MSE RETAINING WALL. THE COST OF THE ADDITIONAL ASSEMBLIES SHALL BE INCLUDED IN THE "CONCRETE BARRIER RAIL WITH MOMENT SLAB" PAY ITEM ON THE RETAINING WALL SHEETS. SEE RETAINING WALL SHEETS W-5 AND W-6.)

NOTES

STRUCTURAL CONCRETE ANCHOR ASSEMBLY

THE STRUCTURAL CONCRETE ANCHOR ASSEMBLY SHALL CONSIST OF THE FOLLOWING COMPONENTS :

A. FERRULES SHALL BE MADE FROM STEEL MEETING THE REQUIREMENTS OF AASHTO M169, GRADE 12L14 AND SHALL HAVE A MINIMUM LENGTH OF THREADS OF 2" FOR ¾" FERRULES.

B. 4 - ¾" ∅ X 2½" BOLTS WITH WASHERS. BOLTS SHALL CONFORM TO THE REQUIREMENTS OF ASTM A307. BOLTS AND WASHERS SHALL BE GALVANIZED. AT THE CONTRACTOR'S OPTION, STAINLESS STEEL BOLTS AND WASHERS MAY BE USED AS AN ALTERNATE FOR THE ¾" ∅ X 2½" GALVANIZED BOLTS AND WASHERS. THEY SHALL CONFORM TO OR EXCEED THE MECHANICAL REQUIREMENTS OF ASTM A307. THE USE OF THIS ALTERNATE SHALL BE APPROVED BY THE ENGINEER.

C. WIRE STRUT SHOWN IN THE CONCRETE ANCHOR ASSEMBLY DETAIL IS THE MINIMUM ALLOWABLE SIZE AND SHALL HAVE A MINIMUM TENSILE STRENGTH OF 100,000 PSI. AS AN OPTION, A 7/16" ∅ WIRE STRUT WITH A MINIMUM TENSILE STRENGTH OF 90,000 PSI IS ACCEPTABLE.

D. THE METAL RAIL ANCHOR ASSEMBLIES TO BE HOT DIPPED GALVANIZED TO CONFORM TO REQUIREMENTS OF ASTM A123.

E. THE COST OF THE METAL RAIL ANCHOR ASSEMBLY WITH BOLTS AND WASHERS COMPLETE IN PLACE SHALL BE INCLUDED IN THE PRICE BID FOR LINEAR FEET OF METAL RAIL.

F. BOLTS TO BE TIGHTENED ONE-HALF TURN WITH A WRENCH FROM A FINGER-TIGHT POSITION.

THE CONTRACTOR MAY USE ADHESIVELY ANCHORED ANCHOR BOLTS IN PLACE OF THE METAL RAIL ANCHOR ASSEMBLY. LEVEL ONE FIELD TESTING IS REQUIRED, AND THE YIELD LOAD OF THE ¾" ∅ BOLT IS 10 KIPS. FOR ADHESIVELY ANCHORED ANCHOR BOLTS OR DOWELS, SEE THE STANDARD SPECIFICATIONS.

WHEN ADHESIVELY ANCHORED ANCHOR BOLTS ARE USED, BOLTS SHALL MEET THE REQUIREMENTS OF ASTM F593 ALLOY 304 STAINLESS STEEL WITH MINIMUM 75,000 PSI ULTIMATE STRENGTH. NUTS SHALL MEET THE REQUIREMENTS OF ASTM F594 ALLOY 304 STAINLESS STEEL AND WASHERS SHALL MEET THE REQUIREMENTS OF ASTM F844 EXCEPT THEY SHALL BE MADE FROM ALLOY 304 STAINLESS STEEL.

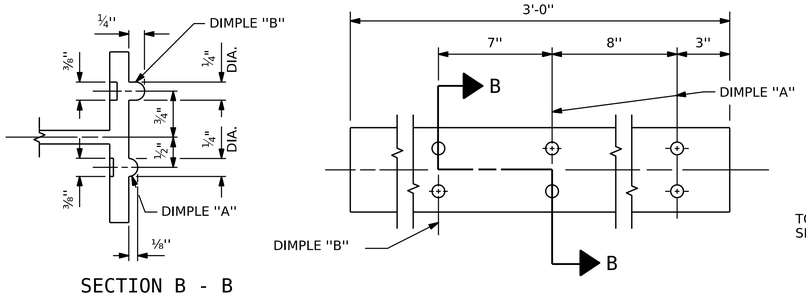

EXPANSION BAR DETAILS

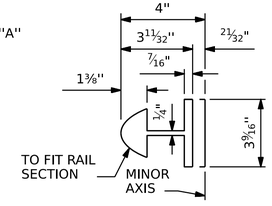

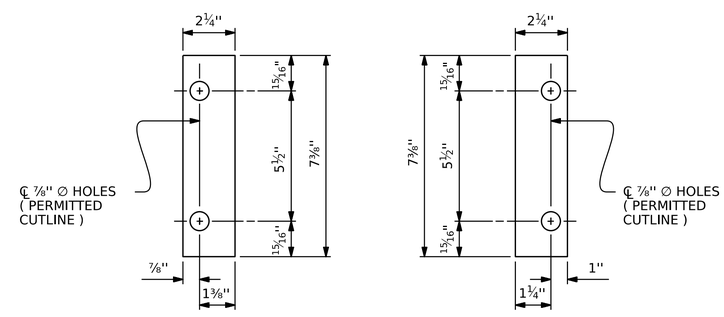

SHIM DETAILS

NOTE :
SHIMS MAY BE CUT ALONG PERMITTED CUTLINE OR SLOTTED TO EDGE OF PLATE TO FACILITATE PLACEMENT.

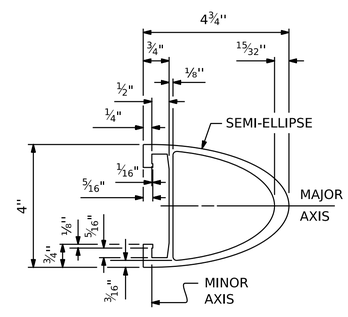

RAIL SECTION

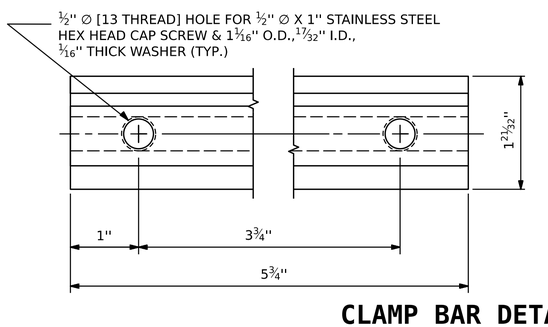

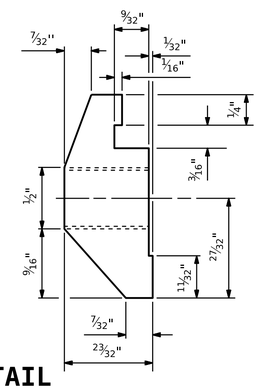

CLAMP BAR DETAIL

(4 REQUIRED PER POST)

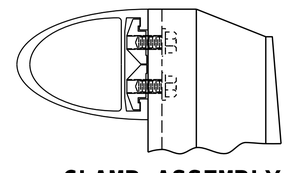

CLAMP ASSEMBLY

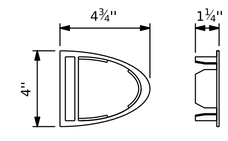

RAIL CAP

PROJECT NO. B-5716

ROCKINGHAM COUNTY

STATION: 18+80.50 -L-

SHEET 6 OF 6

PREPARED BY
MOTT MACDONALD
930 Main Campus Drive, Suite 200
Raleigh, NC 27606
(919) 532-2253
License No. F-0669
www.mottmac.com

NORTH CAROLINA PROFESSIONAL SEAL 043301 ENGINEER JOHN T. WILLIAMS
DocuSigned by: John T. Williams
CF8B5AF2B7B4B4...
27-Jun-2025

STATE OF NORTH CAROLINA
DEPARTMENT OF TRANSPORTATION
RALEIGH

STANDARD

2 BAR METAL RAIL

REVISIONS						SHEET NO.
NO.	BY:	DATE:	NO.	BY:	DATE:	S01-28
1			3			TOTAL SHEETS
2			4			48

DOCUMENT NOT CONSIDERED FINAL UNLESS ALL SIGNATURES COMPLETED

DRAWN BY :	L. L. BLANKENSHIP	DATE :	6-2023
CHECKED BY :	J. T. WILLIAMS	DATE :	2-2024
DESIGN ENGINEER OF RECORD:	J. T. WILLIAMS	DATE :	2-2024

3/11/2025 1:23:09 AM
S:\Roadway\Working\rdmin\Proj\TIPs\B-5716_SMU_2MR_S01-28_780140.dgn
W157077

Docusign Envelope ID: 94478B89-8910-4784-B75E-FFD00CC24A0F

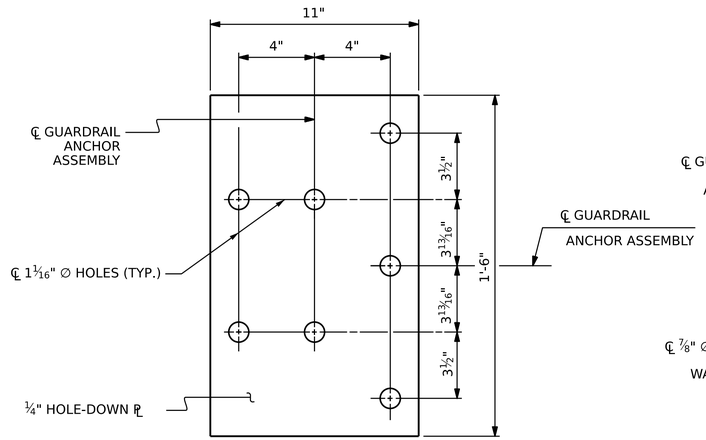

PLAN

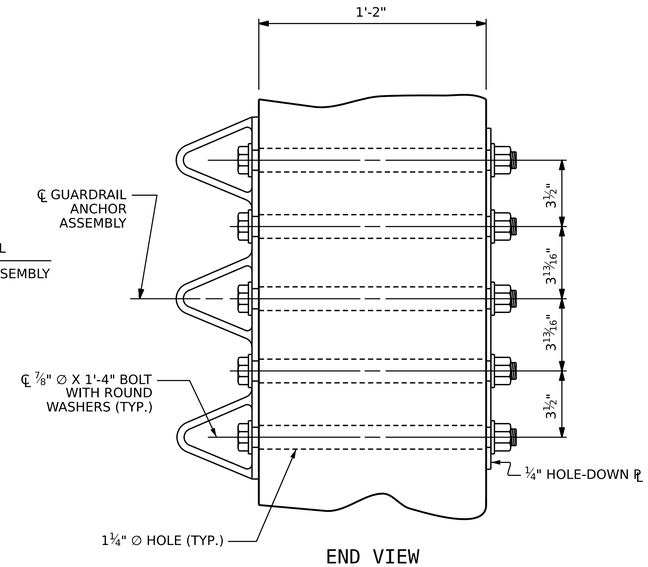

END VIEW

GUARDRAIL ANCHOR ASSEMBLY DETAILS

NOTES:

THE GUARDRAIL ANCHOR ASSEMBLY SHALL CONSIST OF A ¼'' HOLD DOWN PLATE AND 7 - ⅞'' ∅ BOLTS WITH NUTS AND WASHERS.

THE HOLD-DOWN PLATE SHALL CONFORM TO AASHTO M270 GRADE 36. AFTER FABRICATION, THE HOLD-DOWN PLATE SHALL BE HOT-DIP GALVANIZED IN ACCORDANCE WITH AASHTO M111.

BOLTS SHALL CONFORM TO THE REQUIREMENTS OF ASTM A307 AND NUTS SHALL CONFORM TO THE REQUIREMENTS OF AASHTO M291. BOLTS, NUTS AND WASHERS SHALL BE GALVANIZED. AT THE CONTRACTOR'S OPTION, STAINLESS STEEL BOLTS, NUTS AND WASHERS MAY BE USED AS AN ALTERNATE FOR THE ⅞'' ∅ GALVANIZED BOLTS, NUTS AND WASHERS. THEY SHALL CONFORM TO OR EXCEED THE MECHANICAL REQUIREMENTS OF ASTM A307. THE USE OF THIS ALTERNATE SHALL BE APPROVED BY THE ENGINEER.

THE GUARDRAIL ANCHOR ASSEMBLY IS REQUIRED AT ALL POINTS WHERE APPROACH GUARDRAIL IS TO BE ATTACHED TO THE END OF THE PARAPET. FOR POINTS OF ATTACHMENT, SEE SKETCH.

AFTER INSTALLATION, THE EXPOSED THREAD OF THE BOLT SHALL BE BURRED WITH A SHARP POINTED TOOL.

THE COST OF THE GUARDRAIL ANCHOR ASSEMBLIES WITH BOLTS, NUTS AND WASHERS COMPLETE IN PLACE, SHALL BE INCLUDED IN THE VARIOUS PAY ITEMS.

THE VERTICAL REINFORCING BARS MAY BE SHIFTED SLIGHTLY IN THE END POST TO CLEAR ASSEMBLY BOLTS.

THE 1 ¼'' ∅ HOLES SHALL BE FORMED OR DRILLED WITH A CORE BIT. IMPACT TOOLS WILL NOT BE PERMITTED. ANY CONCRETE DAMAGED BY THIS WORK SHALL BE REPAIRED TO THE SATISFACTION OF THE ENGINEER.

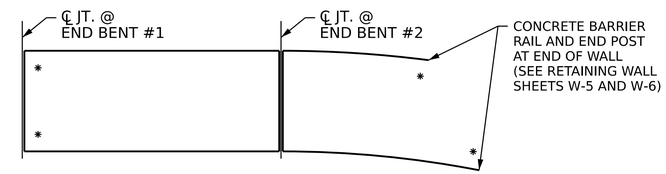

SKETCH SHOWING POINTS OF ATTACHMENT

✱ LOCATION OF GUARDRAIL ATTACHMENT

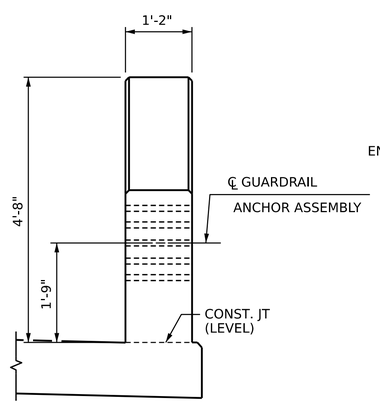

END VIEW

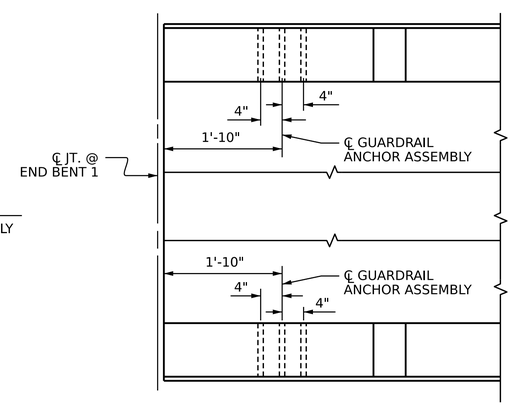

PLAN

LOCATION OF GUARDRAIL ANCHOR AT END POST

PROJECT NO. B-5716

ROCKINGHAM COUNTY

STATION: 18+80.50 -L-

PREPARED BY

MOTT MACDONALD

930 Main Campus Drive, Suite 200
Raleigh, NC 27606
(919) 233-2253
License No. F-0669
www.mottmac.com

NORTH CAROLINA PROFESSIONAL SEAL 043301 ENGINEER JOHNATHAN T. WILLIAMS

DocuSigned by: Johnathan T. Williams
27-Jun-2024

STATE OF NORTH CAROLINA
DEPARTMENT OF TRANSPORTATION
RALEIGH

STANDARD

GUARDRAIL ANCHORAGE DETAILS FOR METAL RAILS

REVISIONS						SHEET NO.
NO.	BY:	DATE:	NO.	BY:	DATE:	S01-29
1			3			TOTAL SHEETS
2			4			48

DOCUMENT NOT CONSIDERED FINAL UNLESS ALL SIGNATURES COMPLETED

DRAWN BY :	L. L. BLANKENSHIP	DATE :	8-2023
CHECKED BY :	J. T. WILLIAMS	DATE :	2-2024
DESIGN ENGINEER OF RECORD:	J. T. WILLIAMS	DATE :	2-2024

3/7/2025 12:21:15 PM
C:\pwworking\mmc01.ad.ftransit\wil57077\d0171488\A01_057_B5716_SMU_GR_S01-29_780140.dgn
WIL57077

Docusign Envelope ID: 4CFA78C6-5C4F-4DF0-A337-66F9A2E6A625

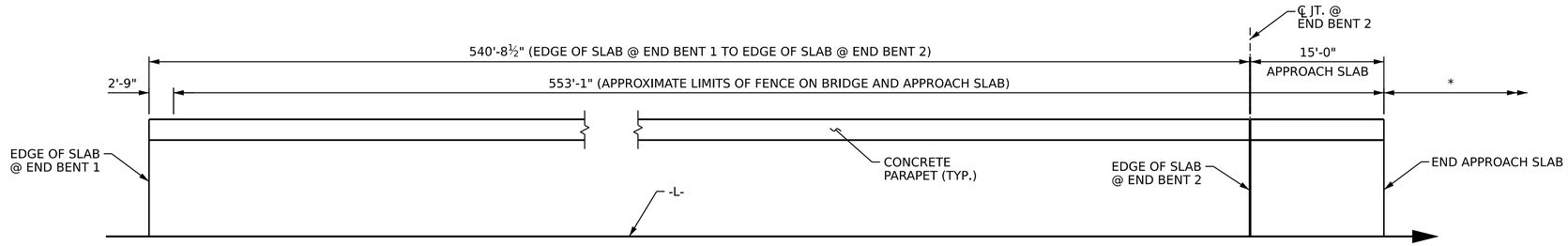

PLAN OF ORNAMENTAL FENCE

PAY LENGTH 1106.17 FEET.
FENCE REQUIRED ON BOTH SIDES OF BRIDGE.
LEFT SIDE SHOWN, RIGHT SIDE SIMILAR.
FOR POST SPACING SEE SPECIAL PROVISIONS.

* LIMITS OF ORNAMENTAL FENCE FOR RETAINING WALL (FENCE SHALL CONTINUE ONTO CONCRETE PARAPET WITH MOMENT SLAB BEHIND MSE RETAINING WALL, SEE RETAINING WALL SHEETS W-5 AND W-6 FOR LIMITS OF ORNAMENTAL FENCE FOR RETAINING WALL AND PAY ITEM.)

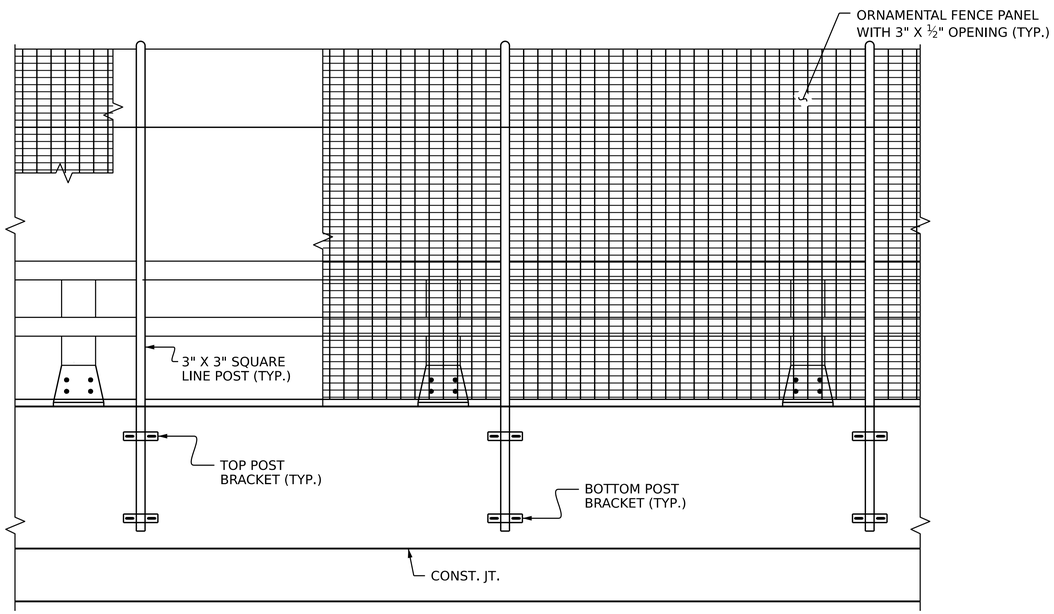

PARTIAL ELEVATION

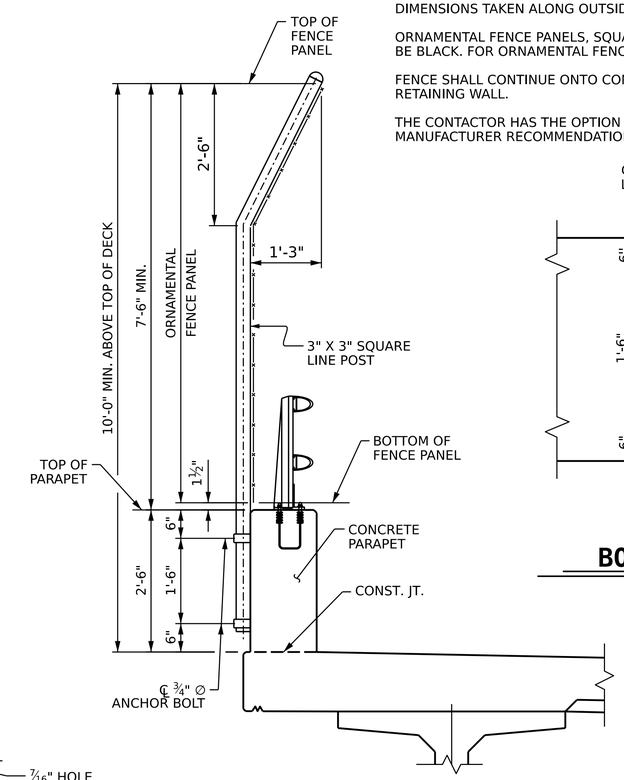

SECTION THRU FENCE

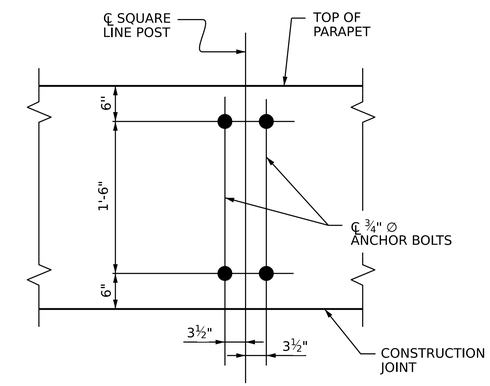

BOLT SETTING DETAIL

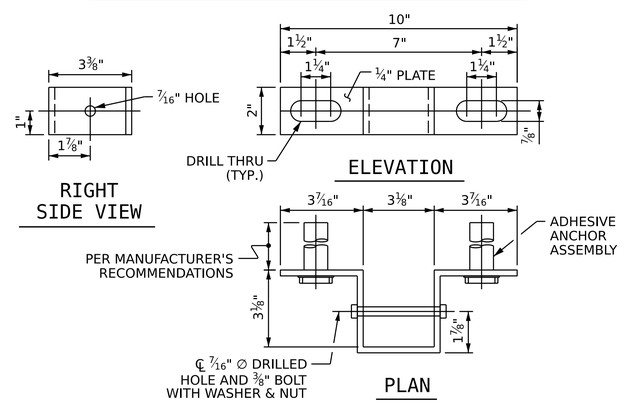

TOP POST BRACKET

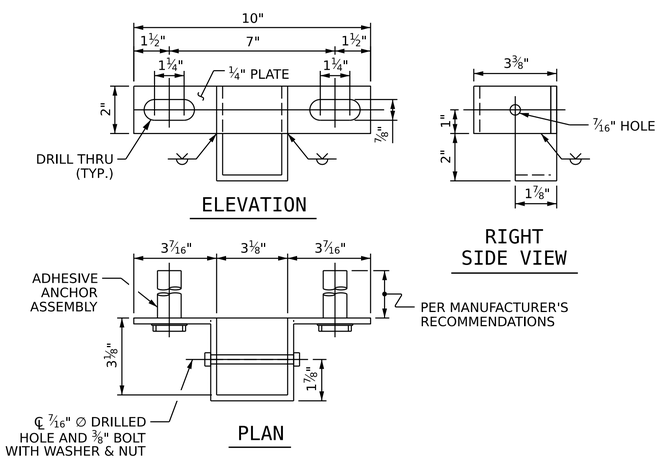

BOTTOM POST BRACKET

NOTES:

FOR ORNAMENTAL FENCE, SEE SPECIAL PROVISIONS.

THE CONTRACTOR SHALL COORDINATE WITH THE ORNAMENTAL FENCE FABRICATOR TO DETERMINE FINAL ORNAMENTAL FENCE LENGTH AND LOCATION OF FENCE POSTS.

THE ORNAMENTAL FENCE SHALL BE CONTINUOUS THRU THE LIMITS SHOWN EXCEPT AS NEEDED TO ACCOMODATE THE EXPANSION JOINT @ END BENT 2.

MATERIAL FOR ANCHOR BOLTS SHALL BE TYPE 304 STAINLESS STEEL WITH A MINIMUM 9000 PSI ULTIMATE STRENGTH. NUTS AND WASHERS SHALL BE TYPE 304 STAINLESS STEEL. ANCHOR BOLTS SHALL BE EMBEDDED AS PER ADHESIVE BONDING SYSTEM MANUFACTURER SPECIFICATIONS. NUTS SHALL BE AMERICAN STANDARD FINISHED HEXAGON THICK NUTS, CLASS 2B THREADS.

FOR SETTING ANCHOR BOLTS, THE CONTRACTOR SHALL USE AN ADHESIVE BONDING SYSTEM. LEVEL ONE FIELD TESTING OF BONDING SYSTEM IS REQUIRED AND THE YIELD LOAD OF THE ¾" ∅ BOLTS IS 12.0 KIPS.

ALL FENCE MATERIAL SHALL MEET THE REQUIREMENTS OF SECTION 1050 OF THE STANDARD SPECIFICATIONS, GALVANIZE ALL STEEL PARTS AND HARDWARE IN ACCORDANCE WITH ARTICLE 1076 OF THE STANDARD SPECIFICATIONS.

THE CONTRACTOR SHALL COORDINATE WITH THE ORNAMENTAL FENCE FABRICATOR TO ENSURE A MINIMUM DISTANCE OF 12" IS MAINTAINED FROM ℄ ANCHOR BOLT TO ℄ JOINTS IN BARRIER RAIL.

DIMENSIONS TAKEN ALONG OUTSIDE FACE OF PARAPET.

ORNAMENTAL FENCE PANELS, SQUARE LINE POSTS, BRACKETS, AND HARDWARE SHALL BE BLACK. FOR ORNAMENTAL FENCE, SEE SPECIAL PROVISIONS

FENCE SHALL CONTINUE ONTO CONCRETE PARAPET WITH MOMENT SLAB BEHIND MSE RETAINING WALL.

THE CONTACTOR HAS THE OPTION TO USE ALTERNATIVE POST BRACKETS PER MANUFACTURER RECOMMENDATIONS.

PROJECT NO. B-5716
ROCKINGHAM COUNTY
STATION: 18+80.50 -L-

DRAWN BY :	L. L. BLANKENSHIP	DATE :	7-2024
CHECKED BY :	J. M. ROBINSON	DATE :	11-2024
DESIGN ENGINEER OF RECORD:	J. T. WILLIAMS	DATE :	11-2024

PREPARED BY
MOTT MACDONALD
930 Main Campus Drive, Suite 200
Raleigh, NC 27606
(919) 552-2253
License No. F-0669
www.mottmac.com

NORTH CAROLINA PROFESSIONAL SEAL 043301 ENGINEER JONATHAN T. WILLIAMS
DocuSigned by: Jonathan Williams
CF8834B85D82449...
11-Jul-2025

DOCUMENT NOT CONSIDERED FINAL UNLESS ALL SIGNATURES COMPLETED

STATE OF NORTH CAROLINA
DEPARTMENT OF TRANSPORTATION
RALEIGH

ORNAMENTAL FENCE

REVISIONS								SHEET NO.
NO.	BY:	DATE:	NO.	BY:	DATE:			S01-30
1			3					TOTAL SHEETS
2			4					48

7/11/2025 10:35:11 AM
C:\Users\wmcs\AppDataLocal\Bentley\Workspaces\Bentley\Projects\WI157077\d0171488\401_059_B5716_SMU_CLF_S01-30_TB0140.dgn
WI157077

Docusign Envelope ID: 94478B89-8910-4784-B75E-FFD00CC24A0F

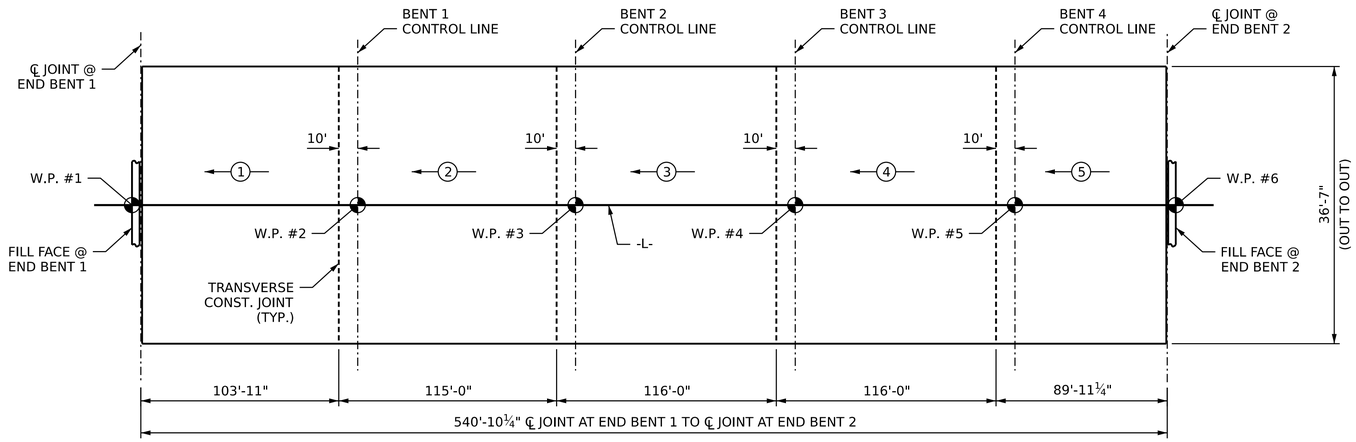

POURING SEQUENCE AND LAYOUT FOR COMPUTING AREA OF REINFORCED CONCRETE DECK SLAB (LINK SLAB) (SQ. FT. = 19,786)

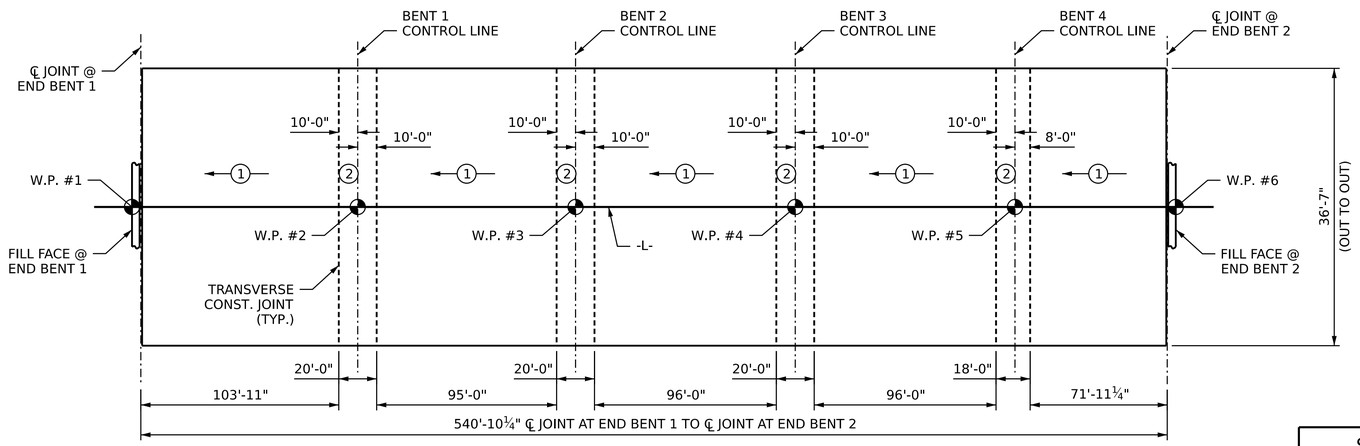

OPTIONAL POURING SEQUENCE (LINK SLAB)

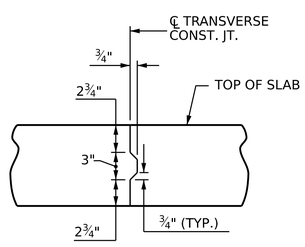

TRANSVERSE CONSTRUCTION JOINT DETAIL

NOTE: REINFORCING STEEL IN SLAB NOT SHOWN.
LONGITUDINAL REINFORCING STEEL SHALL BE CONTINUOUS THRU JOINT

BILL OF MATERIAL

BAR	NO.	SIZE	TYPE	LENGTH	WEIGHT
* A1	865	#5	STR	36'-3"	32705
A2	865	#5	STR	36'-3"	32705
* B1	50	#4	STR	38'-11"	1300
B2	54	#5	STR	41'-11"	2361
* B3	25	#4	STR	39'-2"	654
B4	27	#5	STR	51'-0"	1436
* B5	100	#4	STR	21'-1"	1408
B6	54	#5	STR	52'-0"	2929
* B7	50	#4	STR	27'-4"	913
B8	27	#5	STR	56'-9"	1598
* B9	225	#5	STR	28'-2"	6610
*B10	216	#5	STR	47'-3"	10645
B11	243	#5	STR	24'-0"	6083
B12	66	#5	STR	56'-6"	3889
*B13	75	#5	STR	24'-7"	1923
*B14	72	#5	STR	41'-10"	3142
B15	27	#5	STR	59'-0"	1661
B16	22	#5	STR	49'-3"	1130
* G1	2	#5	STR	36'-3"	76
* K1	8	#8	1	14'-5"	308
* K2	8	#8	2	23'-2"	495
* K3	12	#4	STR	8'-11"	71
* S1	36	#5	4	6'-3"	235
* S2	24	#5	3	3'-3"	81

REINFORCING STEEL = 53,792 LBS

* EPOXY COATED REINFORCING STEEL = 60,566 LBS

BAR TYPES

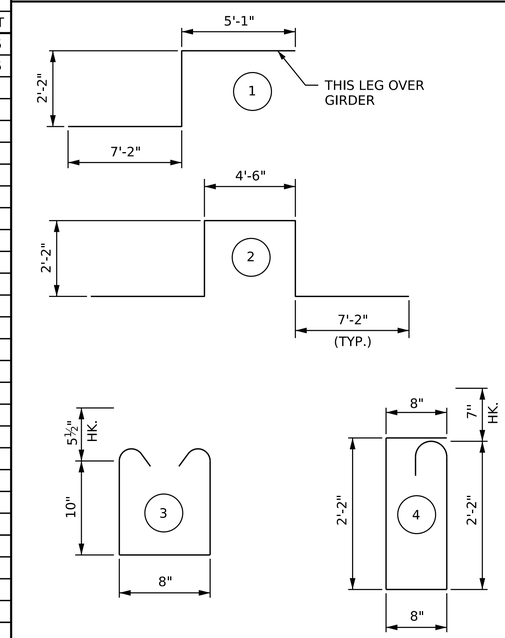

ALL BAR DIMENSIONS ARE OUT TO OUT

SUPERSTRUCTURE BILL OF MATERIAL

	CLASS AA CONCRETE	REINFORCING STEEL	EPOXY COATED REINFORCING STEEL
	(CU.YDS.)	(LBS.)	(LBS.)
SPANS	A, B, C, D & E	53,792	60,566
POUR 1	131.1		
POUR 2	142.9		
POUR 3	152.6		
POUR 4	152.6		
POUR 5	116.0		
TOTALS **	695.2	53,792	60,566

* * QUANTITIES FOR BARRIER RAIL ARE NOT INCLUDED

SUPERSTRUCTURE REINFORCING STEEL LENGTHS ARE BASED ON THE FOLLOWING MINIMUM SPLICE LENGTHS

BAR SIZE	SUPERSTRUCTURE EXCEPT APPROACH SLABS, PARAPET, AND BARRIER RAIL		APPROACH SLABS		PARAPET AND BARRIER RAIL
	EPOXY COATED	UNCOATED	EPOXY COATED	UNCOATED	
#4	1'-11"	1'-7"	1'-11"	1'-7"	2'-6"
#5	2'-5"	2'-0"	2'-5"	2'-0"	3'-1"
#6	2'-10"	2'-5"	3'-7"	2'-5"	3'-8"
#7	4'-2"	2'-9"			
#8	4'-9"	3'-2"			

GROOVING BRIDGE FLOORS

APPROACH SLABS	861	SQ.FT.
BRIDGE DECK	16,724	SQ.FT.
TOTAL	17,585	SQ.FT.

PROJECT NO. B-5716
ROCKINGHAM COUNTY
STATION: 18+80.50 -L-

PREPARED BY
MOTT MACDONALD
930 Main Campus Drive, Suite 200
Raleigh, NC 27606
(919) 552-2253
License No. F-0669
www.mottmac.com

NORTH CAROLINA PROFESSIONAL SEAL 043301 ENGINEER JONATHAN T. WILLIAMS
CPBM
27-Jun-2025

STATE OF NORTH CAROLINA
DEPARTMENT OF TRANSPORTATION
RALEIGH

SUPERSTRUCTURE
BILL OF MATERIAL

REVISIONS						SHEET NO.
NO.	BY:	DATE:	NO.	BY:	DATE:	S01-31
1			3			TOTAL SHEETS
2			4			48

DOCUMENT NOT CONSIDERED FINAL UNLESS ALL SIGNATURES COMPLETED

DRAWN BY :	N. K. KAVANI	DATE :	8-2023
CHECKED BY :	J. T. WILLIAMS	DATE :	3-2024
DESIGN ENGINEER OF RECORD:	J. T. WILLIAMS	DATE :	3-2024

12/16/2024 4:42:35 PM
R:\Structures\B5716_01_780140\Plans\401_061_B5716_SMU_BM_S01-31_780140.dgn
KAVI06794

Docusign Envelope ID: 94478B89-8910-4784-B75E-FFD00CC24A0F

NOTES:

STIRRUPS IN CAP MAY BE SHIFTED AS NECESSARY TO CLEAR ANCHOR BOLTS.

BACKWALL SHALL BE PLACED BEFORE APPLYING THE EPOXY PROTECTIVE COATING.

THE TOP SURFACE AREAS OF THE END BENT CAPS SHALL BE CURED IN ACCORDANCE WITH THE STANDARD SPECIFICATIONS EXCEPT THE MEMBRANE CURING COMPOUND METHOD SHALL NOT BE USED.

THE TOP SURFACE OF THE CAP EXCEPT THE BRIDGE SEAT BUILDUPS SHALL BE SLOPED TRANSVERSELY FROM THE FILL FACE TO THE BACK FACE AT THE RATE OF 2%.

THE CONCRETE IN THE SHADED AREA OF THE WING SHALL BE POURED AFTER THE JOINT BETWEEN THE DECK AND THE APPROACH SLAB HAS BEEN SAWED AND THE PARAPET AND END POST ARE CAST IF SLIP FORMING IS USED.

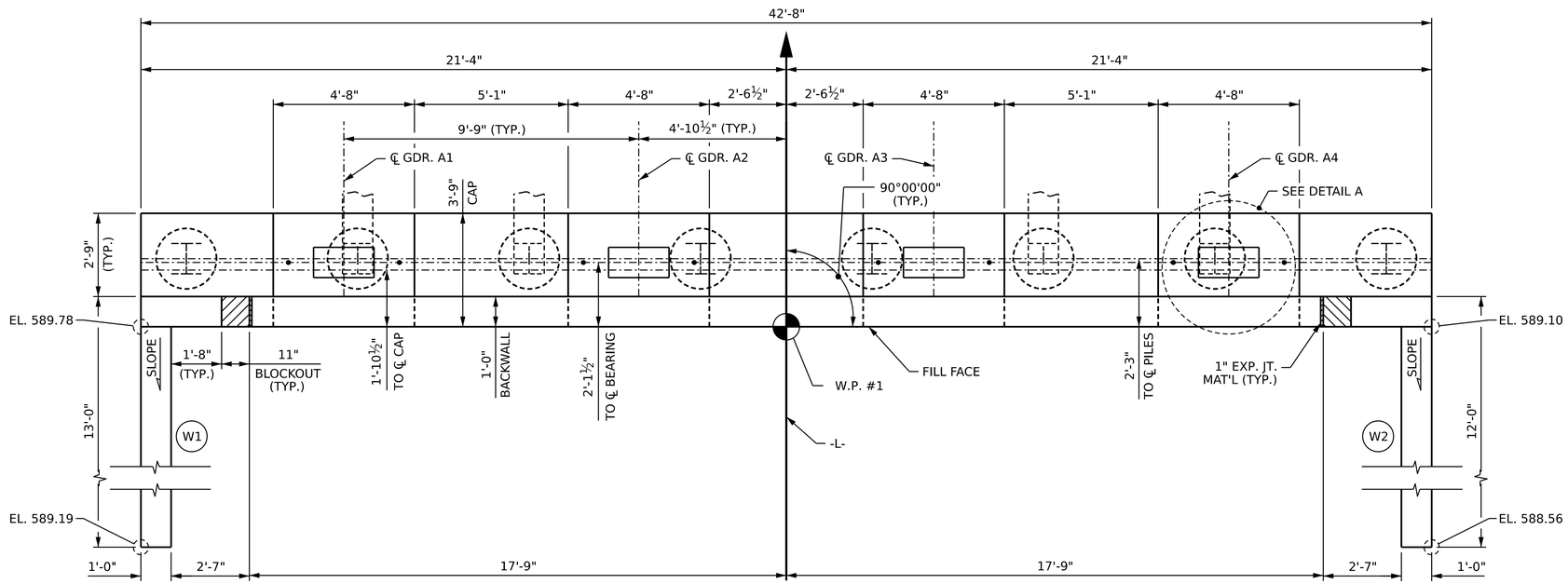

PLAN

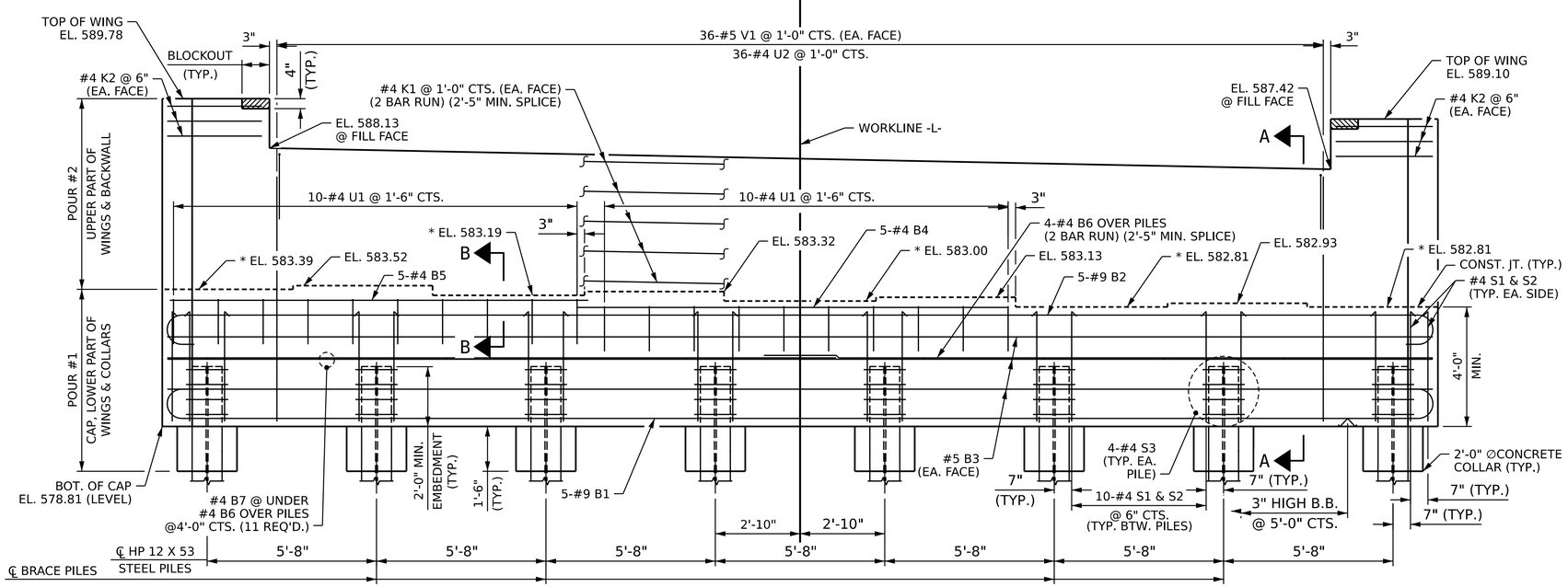

ELEVATION

WINGS NOT SHOWN FOR CLARITY

* FOR LOCATION ON CAP, SEE SHEET 3 OF 3.

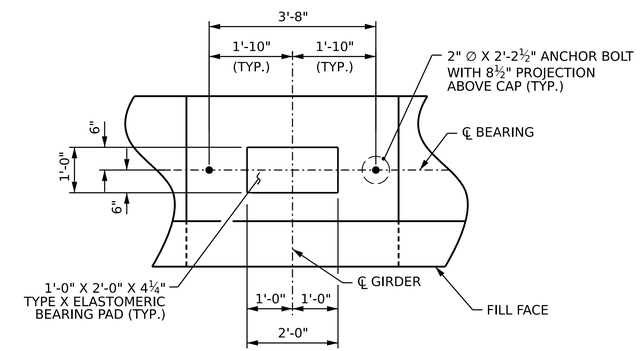

DETAIL A

PROJECT NO. B-5716

ROCKINGHAM COUNTY

STATION: 18+80.50 -L-

SHEET 1 OF 3

PREPARED BY

MOTT MACDONALD
930 Main Campus Drive, Suite 200
Raleigh, NC 27606
(919) 552-2253
License No. F-0669
www.mottmac.com

NORTH CAROLINA PROFESSIONAL SEAL 043301 ENGINEER JOHNATHAN T. WILLIAMS
DocuSigned by: Johnathan T. Williams
27-Jun-2024

STATE OF NORTH CAROLINA
DEPARTMENT OF TRANSPORTATION
RALEIGH

SUBSTRUCTURE

END BENT 1

REVISIONS								SHEET NO.
NO.	BY:	DATE:	NO.	BY:	DATE:			S01-32
1			3					TOTAL SHEETS
2			4					48

DOCUMENT NOT CONSIDERED FINAL UNLESS ALL SIGNATURES COMPLETED

DRAWN BY :	N. K. KAVANI	DATE :	7-2023
CHECKED BY :	J. T. WILLIAMS	DATE :	2-2024
DESIGN ENGINEER OF RECORD:	J. T. WILLIAMS	DATE :	2-2024

12/15/2024 4:42:36 PM
R:\Structures\B5716_ROCKINGHAM\Structures\BRC_01_780140\Plans\401_063_B5716_SMU_E1_S01-32_780140.dgn
KAVI06794

Docusign Envelope ID: 94478B89-8910-4784-B75E-FFD00CC24A0F

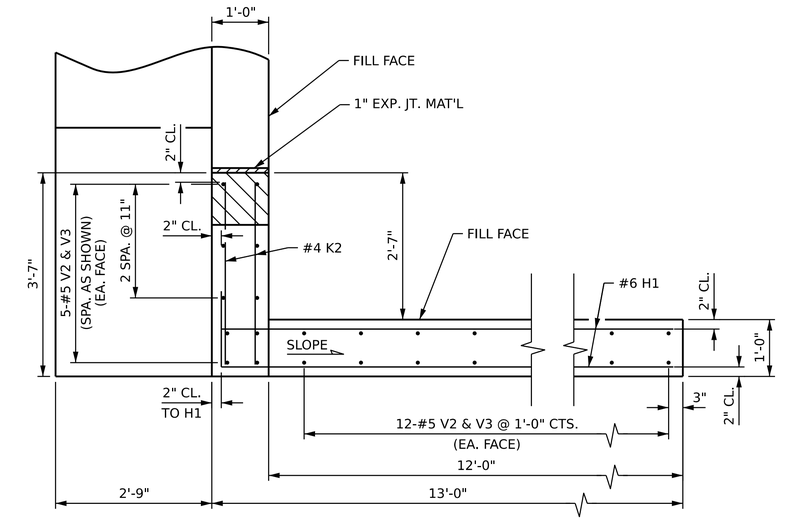

PLAN OF WING W1

SEE NOTES ON SHEET 1 OF 3

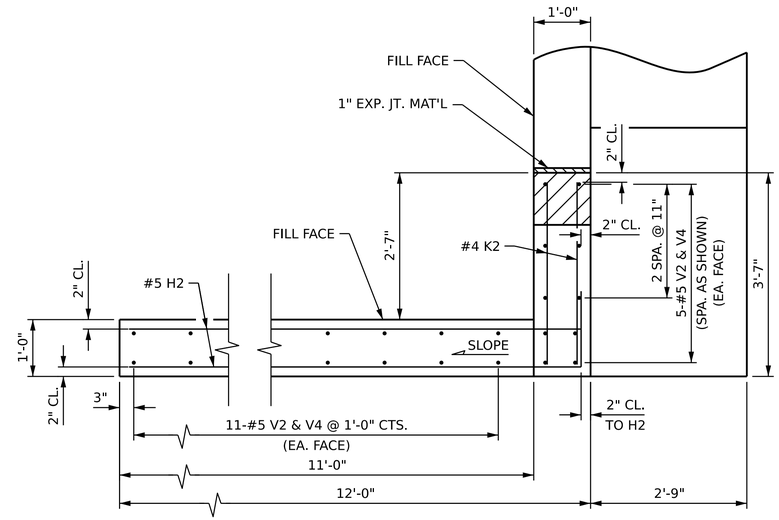

PLAN OF WING W2

SEE NOTES ON SHEET 1 OF 3

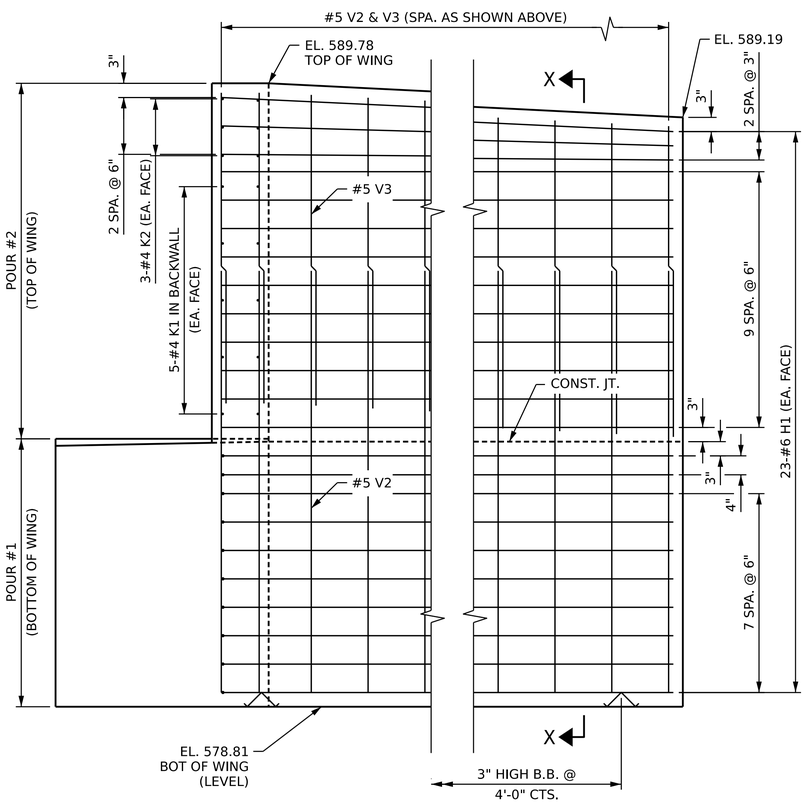

ELEVATION OF WING W1

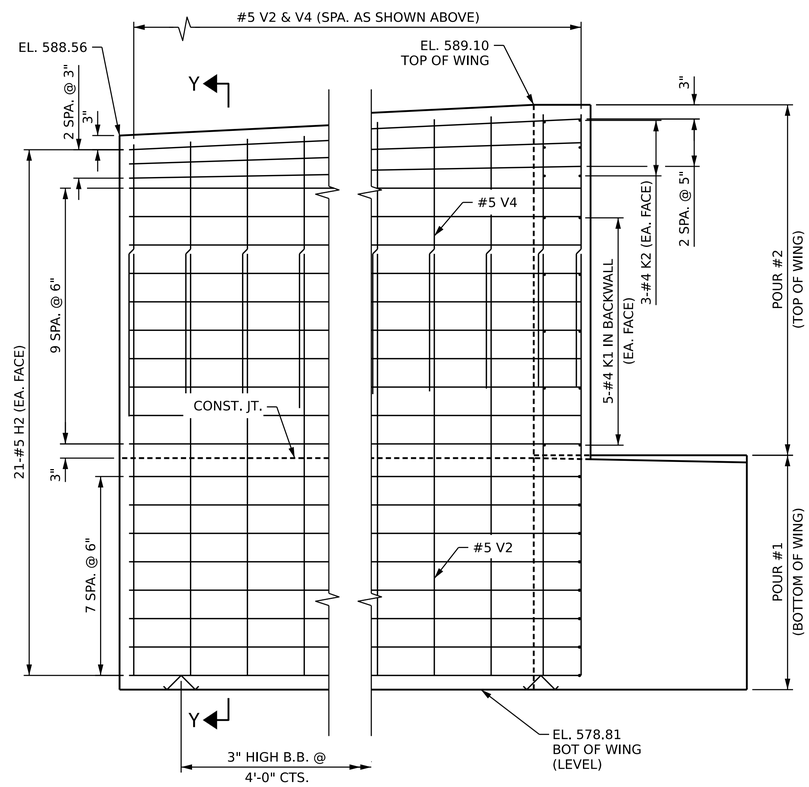

ELEVATION OF WING W2

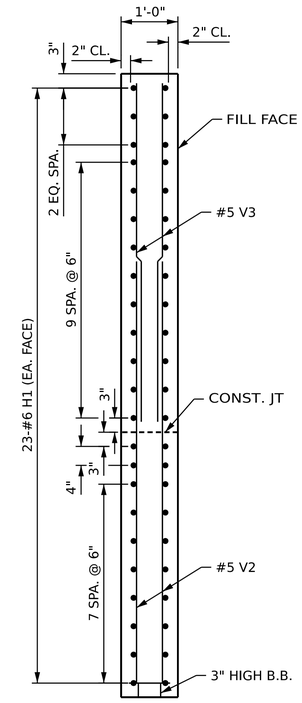

SECTION X-X

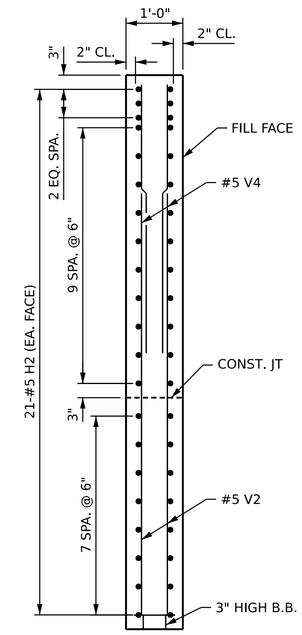

SECTION Y-Y

PROJECT NO. B-5716

ROCKINGHAM COUNTY

STATION: 18+80.50 -L-

SHEET 2 OF 3

PREPARED BY

MOTT MACDONALD

930 Main Campus Drive, Suite 200
Raleigh, NC 27606
(919) 532-2253
License No. F-0669
www.mottmac.com

NORTH CAROLINA PROFESSIONAL SEAL 043301 ENGINEER JOHNATHAN T. WILLIAMS
27-Jun-2024

STATE OF NORTH CAROLINA
DEPARTMENT OF TRANSPORTATION
RALEIGH

SUBSTRUCTURE

END BENT 1

REVISIONS							SHEET NO.
NO.	BY:	DATE:	NO.	BY:	DATE:		S01-33
1			3				TOTAL SHEETS
2			4				48

DOCUMENT NOT CONSIDERED FINAL UNLESS ALL SIGNATURES COMPLETED

DRAWN BY :	N. K. KAVANI	DATE :	8-2023
CHECKED BY :	J. T. WILLIAMS	DATE :	3-2024
DESIGN ENGINEER OF RECORD:	J. T. WILLIAMS	DATE :	3-2024

12/16/2024 4:42:39 PM
R:\Structures\B016.01.780140\Plans\401_065_B5716_SMU_E1_S01-33_780140.dgn
KAV06794

Docusign Envelope ID: 94478B89-8910-4784-B75E-FFD00CC24A0F

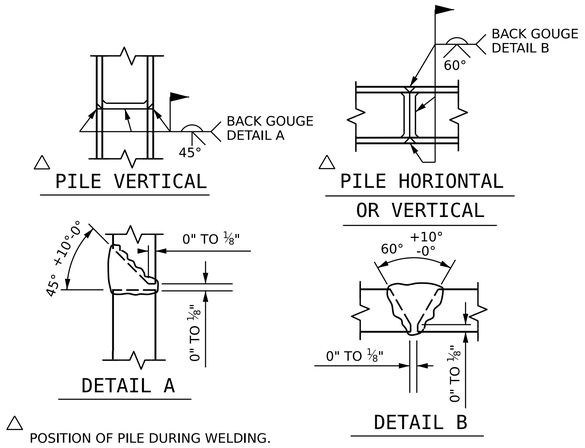

△ POSITION OF PILE DURING WELDING.

PILE SPLICE DETAILS

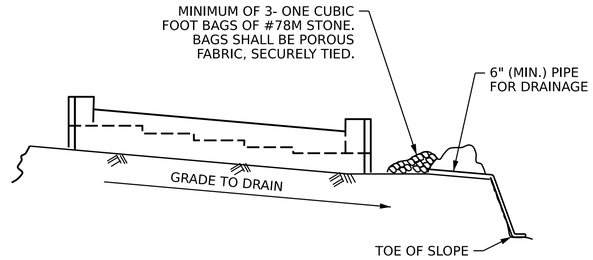

BAGGED STONE AND PIPE SHALL BE PLACED IMMEDIATELY AFTER COMPLETION OF END BENT EXCAVATION. PIPE MAY BE EITHER CONCRETE, CORRUGATED STEEL, CORRUGATED ALUMINUM ALLOY, OR CORRUGATED PLASTIC. PERFORATED PIPE WILL NOT BE ALLOWED.

BAGGED STONE SHALL REMAIN IN PLACE UNTIL THE ENGINEER DIRECTS THAT IT BE REMOVED. THE CONTRACTOR SHALL REMOVE AND DISPOSE OF SILT ACCUMULATIONS AT BAGGED STONE WHEN SO DIRECTED BY THE ENGINEER. BAGS SHALL BE REMOVED AND REPLACED WHENEVER THE ENGINEER DETERMINES THAT THEY HAVE DETERIORATED AND LOST THEIR EFFECTIVENESS.

NO SEPARATE PAYMENT WILL BE MADE FOR THIS WORK AND THE ENTIRE COST OF THIS WORK SHALL BE INCLUDED IN THE UNIT CONTRACT PRICE BID FOR THE SEVERAL PAY ITEMS.

TEMPORARY DRAINAGE AT END BENT

BAR TYPES

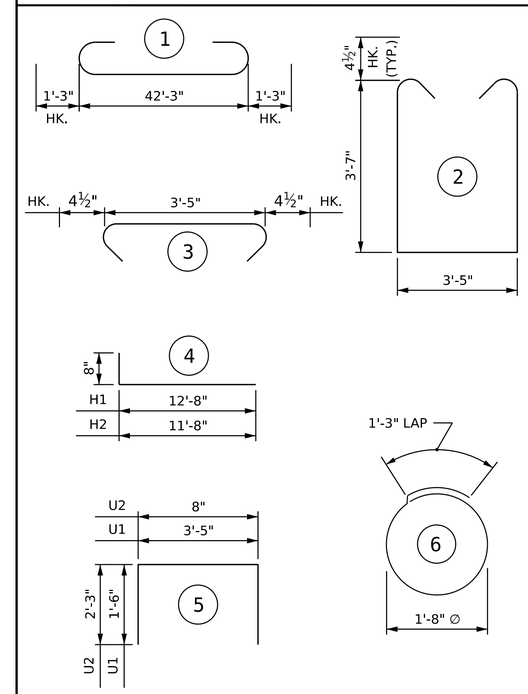

ALL BAR DIMENSIONS ARE OUT TO OUT

BILL OF MATERIAL

END BENT 1

BAR	NO.	SIZE	TYPE	LENGTH	WEIGHT
B1	5	#9	1	44'-9"	761
B2	5	#9	1	44'-9"	761
B3	6	#5	STR	42'-3"	264
B4	5	#4	STR	14'-5"	48
B5	5	#4	STR	14'-0"	47
B6	8	#4	STR	22'-5"	120
B7	11	#4	STR	3'-5"	25
H1	46	#6	4	13'-4"	921
H2	42	#5	4	12'-4"	540
K1	20	#4	STR	22'-5"	299
K2	12	#4	STR	3'-3"	26
S1	74	#4	2	11'-4"	560
S2	74	#4	3	4'-2"	206
S3	32	#4	6	6'-6"	139
U1	20	#4	5	6'-5"	86
U2	36	#4	5	5'-2"	124
V1	72	#5	STR	8'-3"	620
V2	66	#5	STR	7'-5"	511
V3	34	#5	STR	5'-6"	195
V4	32	#5	STR	4'-10"	161

REINFORCING STEEL = 6,414 LBS

CLASS A CONCRETE BREAKDOWN:
(FOR END BENT 1)

POUR #1 (CAP, LOWER PART OF WINGS, & COLLARS)	30.8 C.Y.
POUR #2 (UPPER PART OF WINGS, & BACKWALL)	12.9 C.Y.
TOTAL CLASS A CONCRETE	43.7 C.Y.

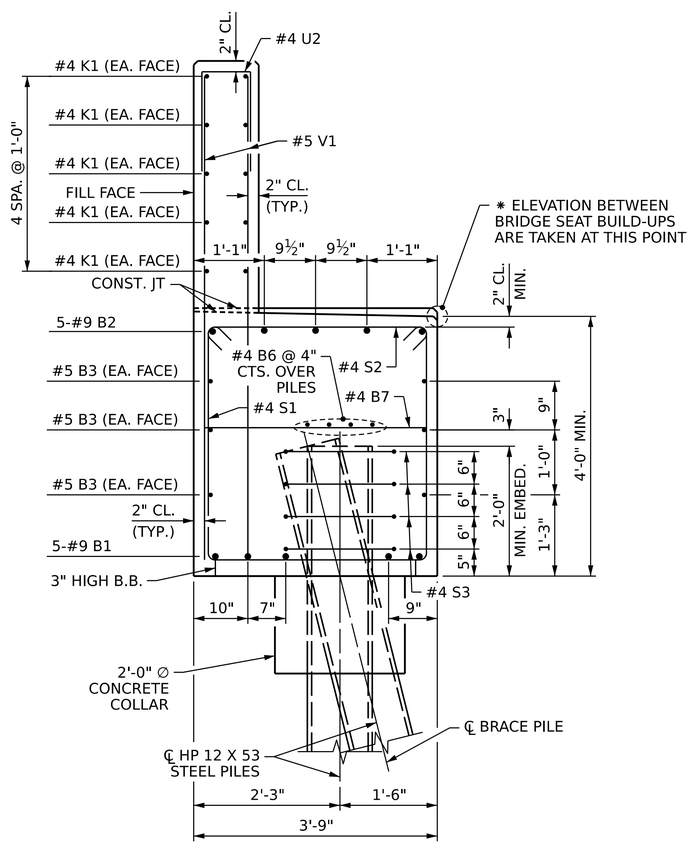

SECTION A-A

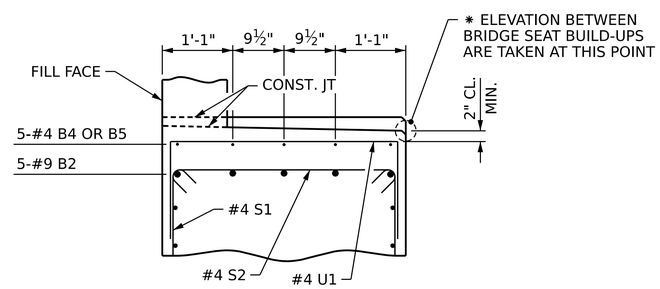

SECTION B-B

PROJECT NO. B-5716
ROCKINGHAM COUNTY
STATION: 18+80.50 -L-

SHEET 3 OF 3

PREPARED BY
MOTT MACDONALD
930 Main Campus Drive, Suite 200
Raleigh, NC 27606
(919) 233-2253
License No. F-0669
www.mottmac.com

NORTH CAROLINA PROFESSIONAL SEAL 043301 ENGINEER JONATHAN T. WILLIAMS
27-Jun-2024

STATE OF NORTH CAROLINA
DEPARTMENT OF TRANSPORTATION
RALEIGH

SUBSTRUCTURE

END BENT 1

REVISIONS							SHEET NO.
NO.	BY:	DATE:	NO.	BY:	DATE:		S01-34
1			3				TOTAL SHEETS
2			4				48

DOCUMENT NOT CONSIDERED FINAL UNLESS ALL SIGNATURES COMPLETED

DRAWN BY :	N. K. KAVANI	DATE :	8-2023
CHECKED BY :	J. T. WILLIAMS	DATE :	3-2024
DESIGN ENGINEER OF RECORD:	J. T. WILLIAMS	DATE :	3-2024

12/16/2024 4:40:40 PM
R:\Structures\Bridge_01_780140\Plans\401_067_B5716_SMU_E1_S01-34_780140.dgn
KAVI06794

Docusign Envelope ID: 94478B89-8910-4784-B75E-FFD00CC24A0F

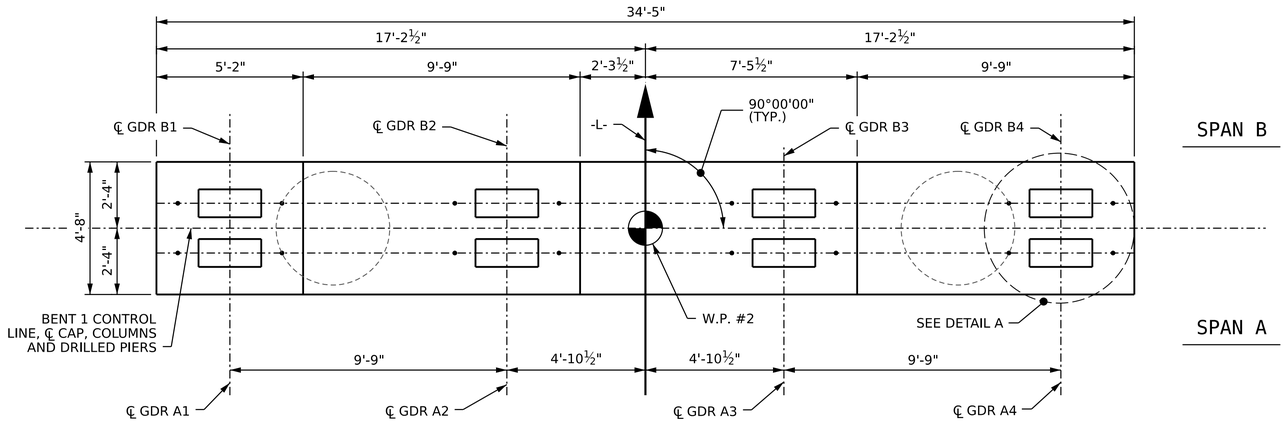

PLAN

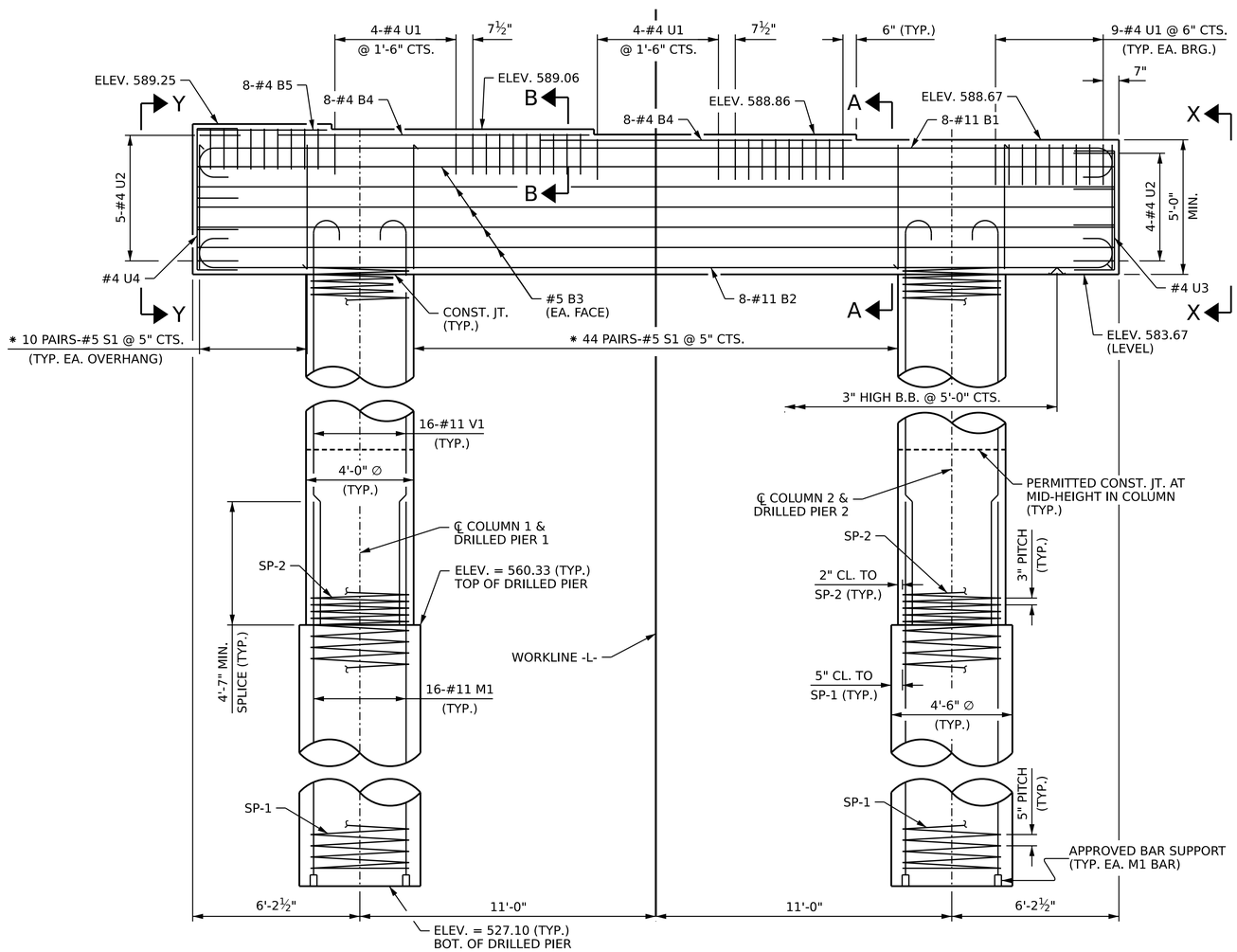

ELEVATION

NOTES:

STIRRUPS IN CAP MAY BE SHIFTED AS NECESSARY TO CLEAR ANCHOR BOLTS.

HOOKS ON "V" BARS MAY BE TURNED AS NECESSARY FOR PLACING REINFORCING STEEL.

ALL STEEL IN THE DRILLED PIERS IS INCLUDED IN THE PAY ITEMS FOR "REINFORCING STEEL" AND "SPIRAL COLUMN REINFORCING STEEL."

* INVERT ALTERNATE #5 S1 STIRRUP PAIRS.

THE LOCATION OF THE CONSTRUCTION JOINT IN THE DRILLED PIERS IS BASED ON AN APPROXIMATE GROUND LINE ELEVATION. IF THE CONSTRUCTION JOINT IS ABOVE THE ACTUAL GROUND ELEVATION, THE CONTRACTOR SHALL PLACE THE CONSTRUCTION JOINT 1 FOOT BELOW THE GROUND LINE.

THE CONTRACTOR'S ATTENTION IS CALLED TO THE FACT THAT THE LONGITUDINAL REINFORCEMENT FOR THE DRILLED PIERS IS DETAILED WITH 3 FEET OF EXTRA LENGTH.

THE TOP SURFACE AREAS OF THE BENT CAPS SHALL BE CURED IN ACCORDANCE WITH THE STANDARD SPECIFICATIONS EXCEPT THE MEMBRANE CURING COMPOUND METHOD SHALL NOT BE USED.

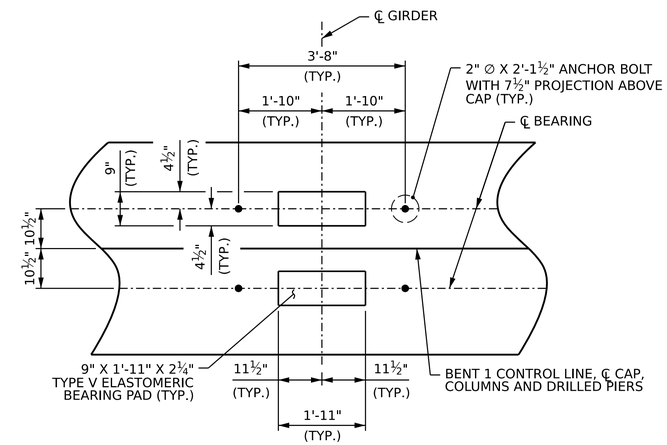

DETAIL A

PROJECT NO. B-5716
ROCKINGHAM COUNTY
STATION: 18+80.50 -L-

SHEET 1 OF 2

PREPARED BY
MOTT MACDONALD
930 Main Campus Drive, Suite 200
Raleigh, NC 27606
(919) 552-2253
License No. F-0669
www.mottmac.com

NORTH CAROLINA PROFESSIONAL SEAL 043301 ENGINEER JONATHAN T. WILLIAMS
CF8B3A8E-E9E9-4A0A...
27-Jun-2025

STATE OF NORTH CAROLINA
DEPARTMENT OF TRANSPORTATION
RALEIGH

SUBSTRUCTURE

BENT 1

REVISIONS						SHEET NO.
NO.	BY:	DATE:	NO.	BY:	DATE:	S01-35
1			3			TOTAL SHEETS
2			4			48

DOCUMENT NOT CONSIDERED FINAL UNLESS ALL SIGNATURES COMPLETED

DRAWN BY :	N. K. KAVANI	DATE :	6-2023
CHECKED BY :	R. L. DICKE	DATE :	3-2024
DESIGN ENGINEER OF RECORD:	J. T. WILLIAMS	DATE :	3-2024

12/15/2024 4:42:42 PM
R:\Structures\B5716_SMU_B1_S01-35_780140.dgn
KAVI06794

Docusign Envelope ID: 94478B89-8910-4784-B75E-FFD00CC24A0F

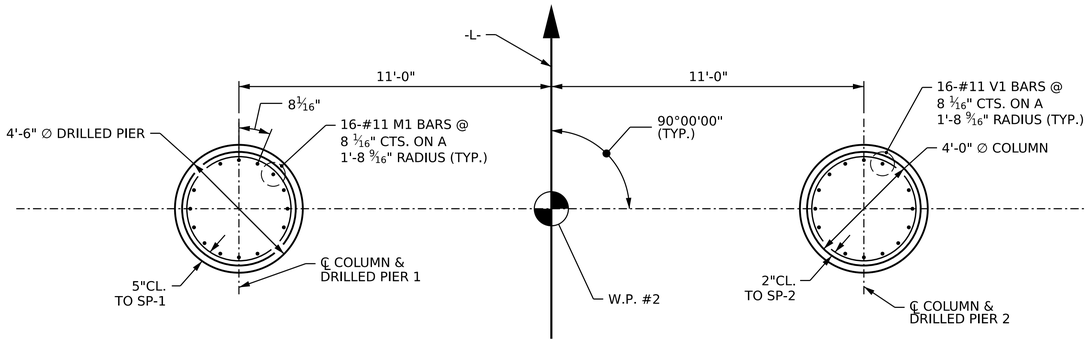

PLAN OF DRILLED PIER & COLUMNS

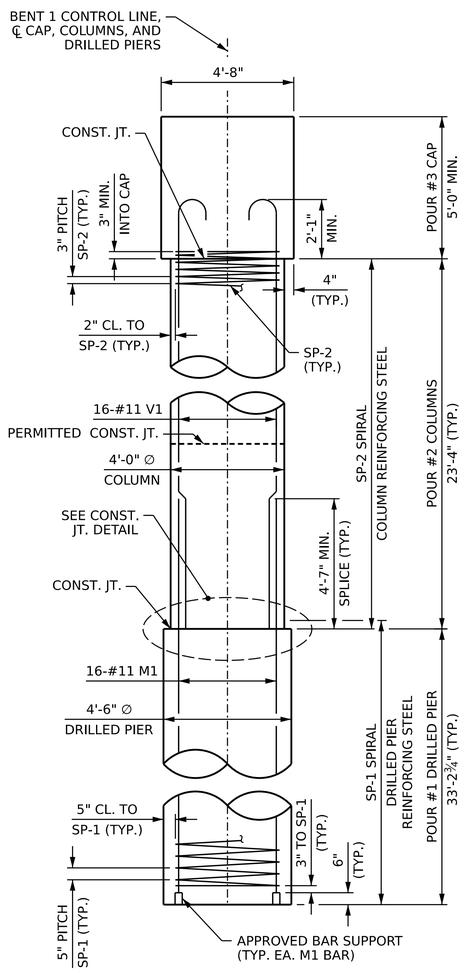

END ELEVATION

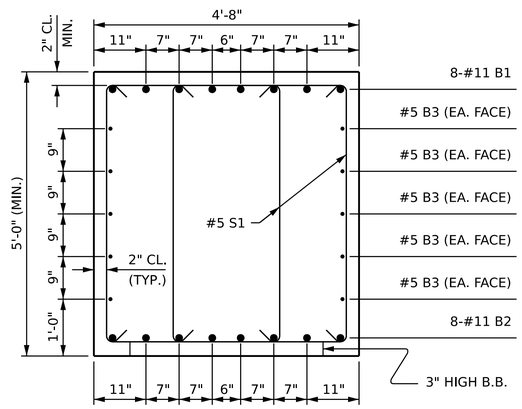

SECTION A-A

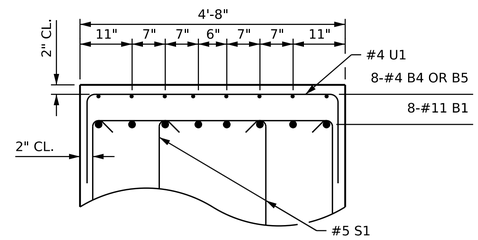

SECTION B-B

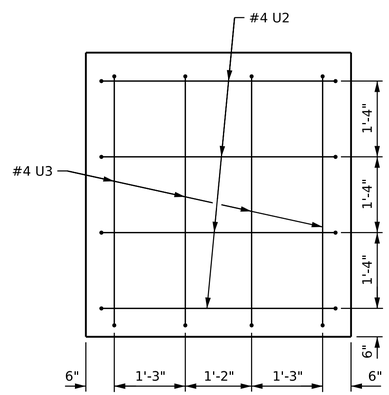

VIEW X-X

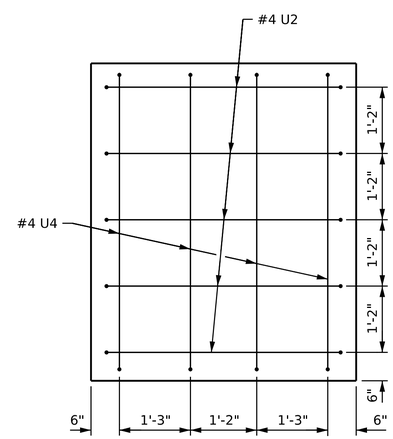

VIEW Y-Y

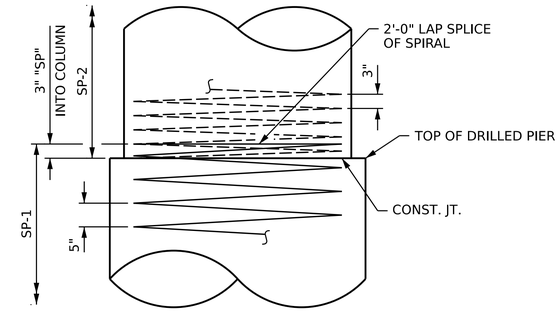

CONSTRUCTION JT. DETAIL

BAR TYPES

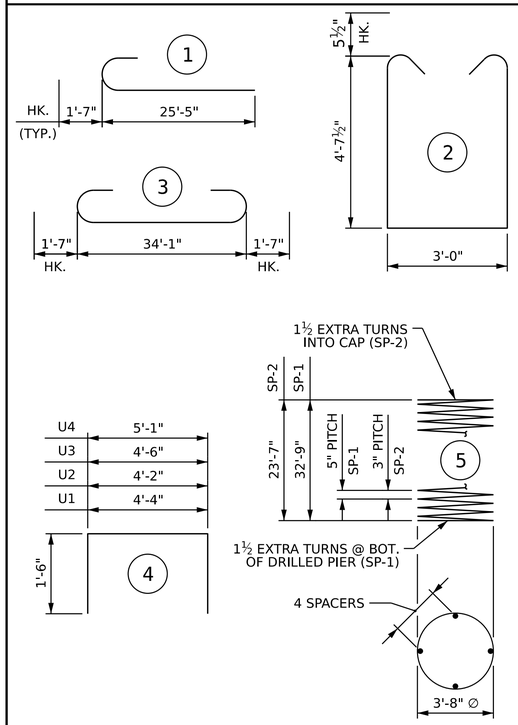

ALL BAR DIMENSIONS ARE OUT TO OUT

BILL OF MATERIAL

BENT 1

BAR	NO.	SIZE	TYPE	LENGTH	WEIGHT
B1	8	#11	3	37'-3"	1583
B2	8	#11	3	37'-3"	1583
B3	10	#5	STR	34'-1"	355
B4	16	#4	STR	11'-7"	124
B5	8	#4	STR	4'-10"	26
M1	32	#11	STR	40'-7"	6900
S1	128	#5	2	13'-2"	1758
U1	44	#4	4	7'-4"	216
U2	9	#4	4	7'-2"	43
U3	4	#4	4	7'-6"	20
U4	4	#4	4	8'-1"	22
V1	32	#11	1	27'-1"	4605
REINFORCING STEEL			=	17,235 LBS	
SP-1	2	✳	5	911'-11"	1902
SP-2	2	✳✳	5	1093'-7"	1461
SPIRAL COLUMN REINFORCING STEEL			=	3,363 LBS	

✳ THE SP-1 SPIRAL REINFORCING STEEL SHALL BE W31 OR D-31 COLD DRAWN WIRE OR #5 PLAIN OR DEFORMED BAR.

✳✳ THE SP-2 SPIRAL REINFORCING STEEL SHALL BE W20 OR D-20 COLD DRAWN WIRE OR #4 PLAIN OR DEFORMED BAR.

CLASS A CONCRETE BREAKDOWN:
(FOR BENT 1)

POUR #2 (COLUMNS)	21.8 C.Y.
POUR #3 (CAPS)	31.3 C.Y.
TOTAL CLASS A CONCRETE	53.1 C.Y.

DRILLED PIERS:
(FOR BENT 1)

DRILLED PIER CONCRETE POUR #1 (DRILLED PIERS)	39.2 C.Y.

PROJECT NO. B-5716
ROCKINGHAM COUNTY
STATION: 18+80.50 -L-

SHEET 2 OF 2

PREPARED BY
MOTT MACDONALD
930 Main Campus Drive, Suite 200
Raleigh, NC 27606
(919) 552-2253
License No. F-0669
www.mottmac.com

NORTH CAROLINA PROFESSIONAL SEAL 043301 ENGINEER JOHNATHAN T. WILLIAMS
Digitally signed by Johnathan T. Williams
27-Jun-2024

STATE OF NORTH CAROLINA
DEPARTMENT OF TRANSPORTATION
RALEIGH

SUBSTRUCTURE

BENT 1 DETAILS

DOCUMENT NOT CONSIDERED FINAL UNLESS ALL SIGNATURES COMPLETED

REVISIONS						SHEET NO.
NO.	BY:	DATE:	NO.	BY:	DATE:	S01-36
1			3			TOTAL SHEETS
2			4			48

DRAWN BY :	N. K. KAVANI	DATE :	6-2023
CHECKED BY :	R. L. DICKE	DATE :	3-2024
DESIGN ENGINEER OF RECORD:	J. T. WILLIAMS	DATE :	3-2024

12/16/2024 4:42:44 PM
R:\Structures\Bridge\01_B780140\Plans\401_071_B5716_SMU_B1_S01-36_780140.dgn
KAVI06794

Docusign Envelope ID: 94478B89-8910-4784-B75E-FFD00CC24A0F

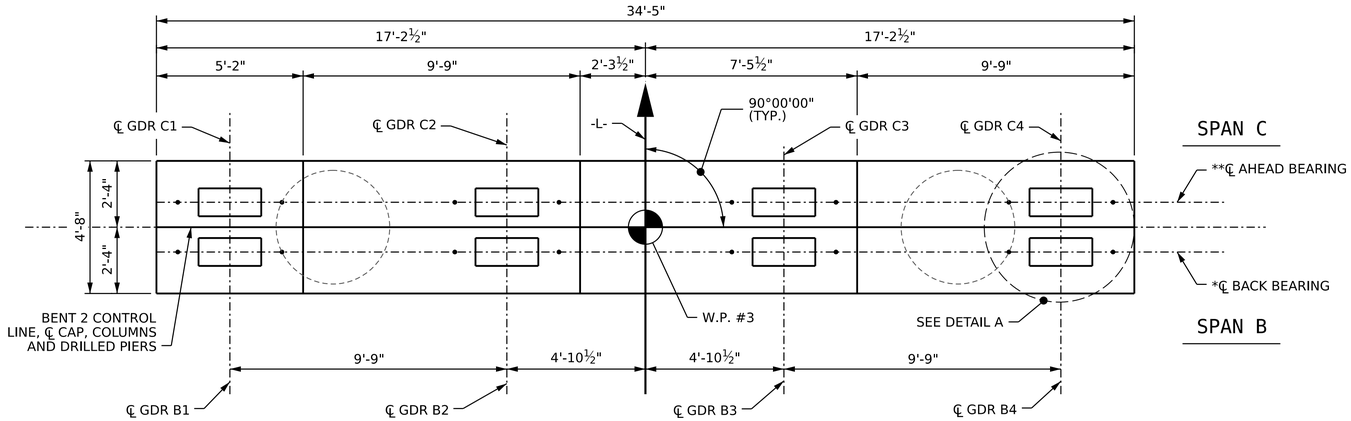

PLAN

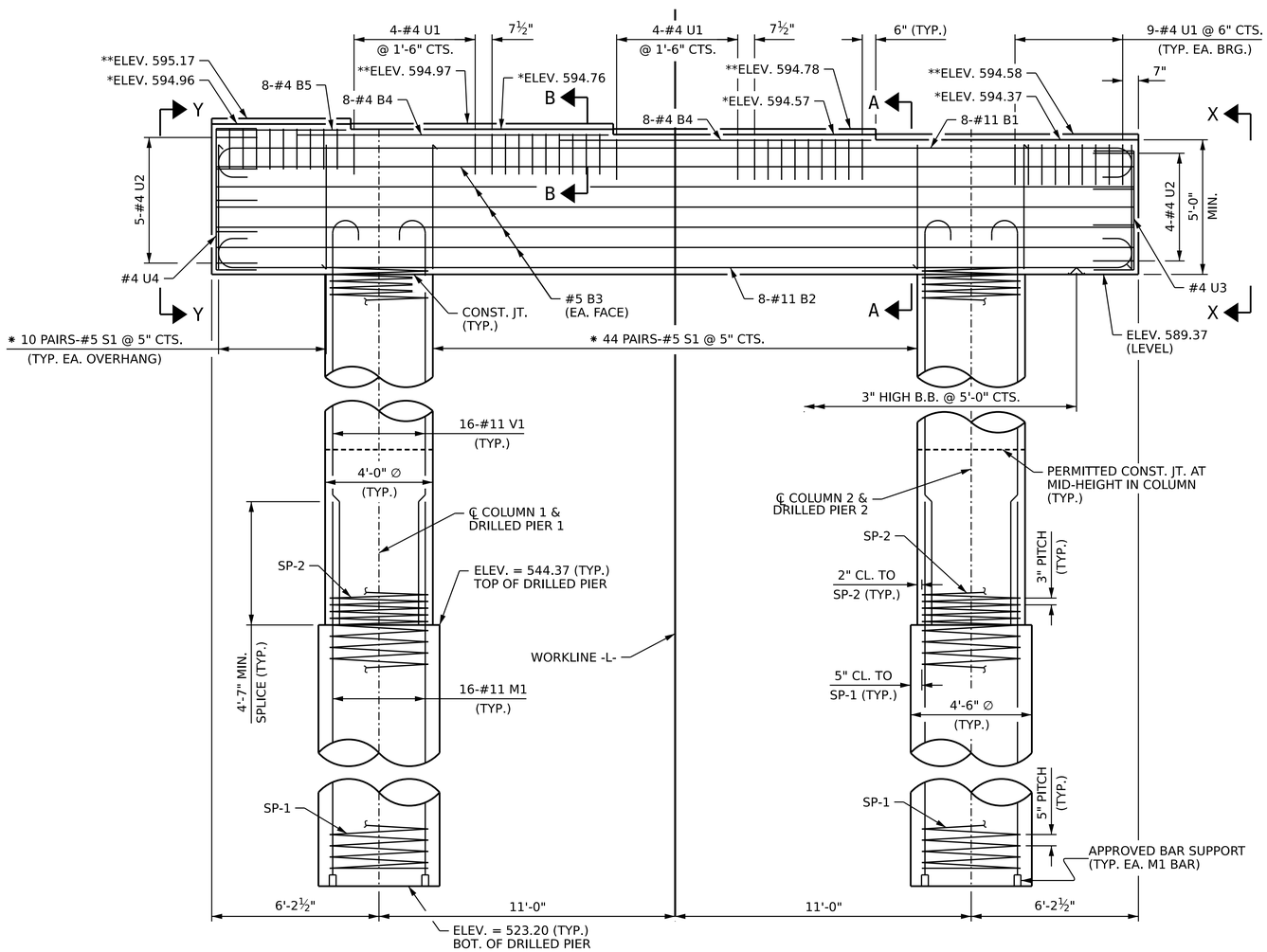

ELEVATION

NOTES:

STIRRUPS IN CAP MAY BE SHIFTED AS NECESSARY TO CLEAR ANCHOR BOLTS.

HOOKS ON "V" BARS MAY BE TURNED AS NECESSARY FOR PLACING REINFORCING STEEL.

ALL STEEL IN THE DRILLED PIERS IS INCLUDED IN THE PAY ITEMS FOR "REINFORCING STEEL" AND "SPIRAL COLUMN REINFORCING STEEL."

* INVERT ALTERNATE #5 S1 STIRRUP PAIRS.

THE LOCATION OF THE CONSTRUCTION JOINT IN THE DRILLED PIERS IS BASED ON AN APPROXIMATE GROUND LINE ELEVATION. IF THE CONSTRUCTION JOINT IS ABOVE THE ACTUAL GROUND ELEVATION, THE CONTRACTOR SHALL PLACE THE CONSTRUCTION JOINT 1 FOOT BELOW THE GROUND LINE.

THE CONTRACTOR'S ATTENTION IS CALLED TO THE FACT THAT THE LONGITUDINAL REINFORCEMENT FOR THE DRILLED PIERS IS DETAILED WITH 3 FEET OF EXTRA LENGTH.

THE TOP SURFACE AREAS OF THE BENT CAPS SHALL BE CURED IN ACCORDANCE WITH THE STANDARD SPECIFICATIONS EXCEPT THE MEMBRANE CURING COMPOUND METHOD SHALL NOT BE USED.

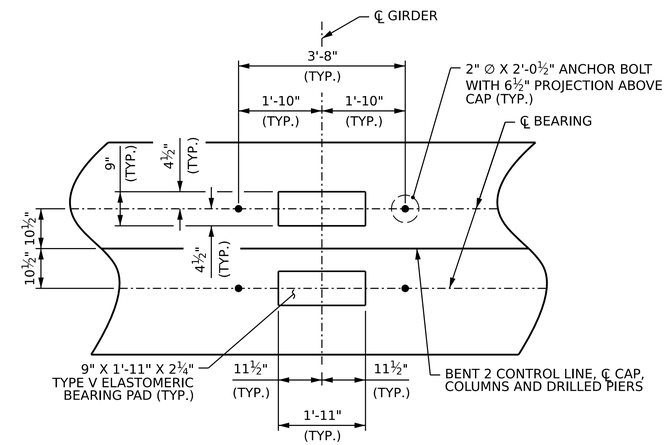

DETAIL A

PROJECT NO. B-5716

ROCKINGHAM COUNTY

STATION: 18+80.50 -L-

SHEET 1 OF 2

PREPARED BY

MOTT MACDONALD
930 Main Campus Drive, Suite 200
Raleigh, NC 27606
(919) 552-2253
License No. F-0669
www.mottmac.com

NORTH CAROLINA PROFESSIONAL SEAL 043301 ENGINEER JONATHAN T. WILLIAMS

Jonathan T. Williams
27-Jun-2024

STATE OF NORTH CAROLINA
DEPARTMENT OF TRANSPORTATION
RALEIGH

SUBSTRUCTURE

BENT 2

REVISIONS						SHEET NO.
NO.	BY:	DATE:	NO.	BY:	DATE:	S01-37
1			3			TOTAL SHEETS
2			4			48

DOCUMENT NOT CONSIDERED FINAL UNLESS ALL SIGNATURES COMPLETED

DRAWN BY :	N. K. KAVANI	DATE :	7-2023
CHECKED BY :	R. L. DICKE	DATE :	3-2024
DESIGN ENGINEER OF RECORD:	J. T. WILLIAMS	DATE :	3-2024

12/15/2024 4:42:46 PM
R:\Structures\B5716_B70140\Plans\401_073_B5716_SMU_B2_S01-37_780140.dgn
KAVI06794

Docusign Envelope ID: 94478B89-8910-4784-B75E-FFD00CC24A0F

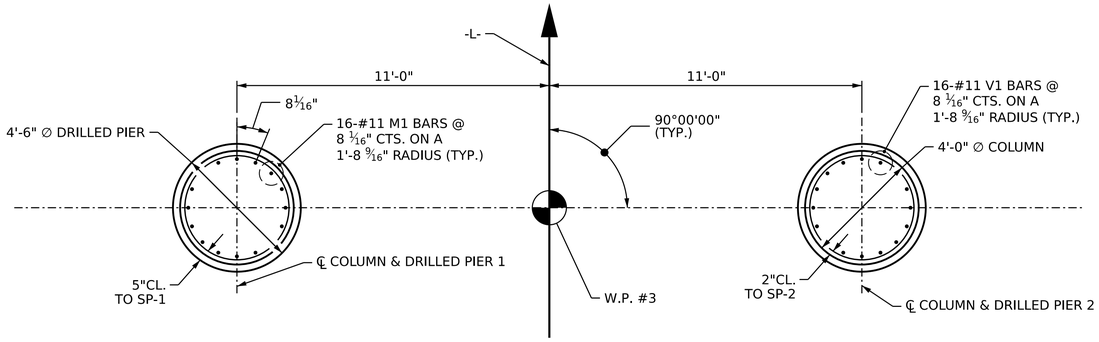

PLAN OF DRILLED PIER & COLUMNS

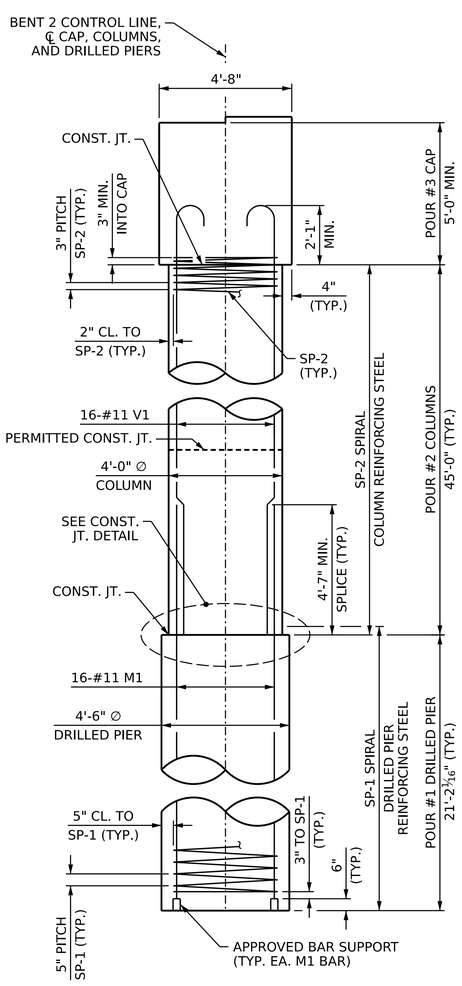

END ELEVATION

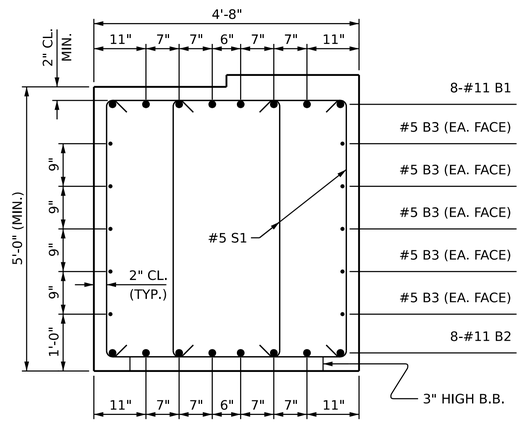

SECTION A-A

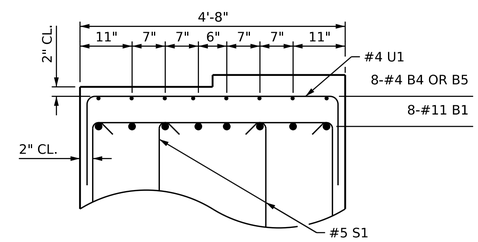

SECTION B-B

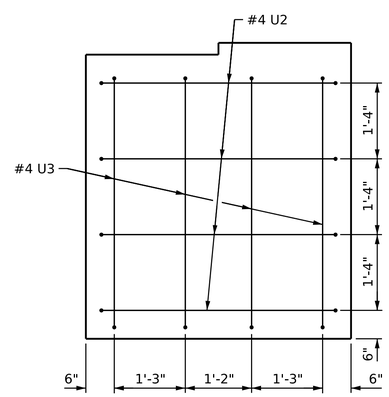

VIEW X-X

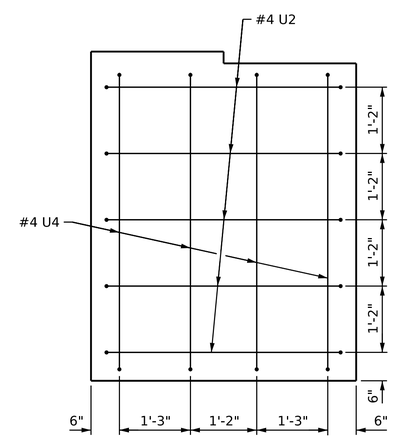

VIEW Y-Y

BAR TYPES

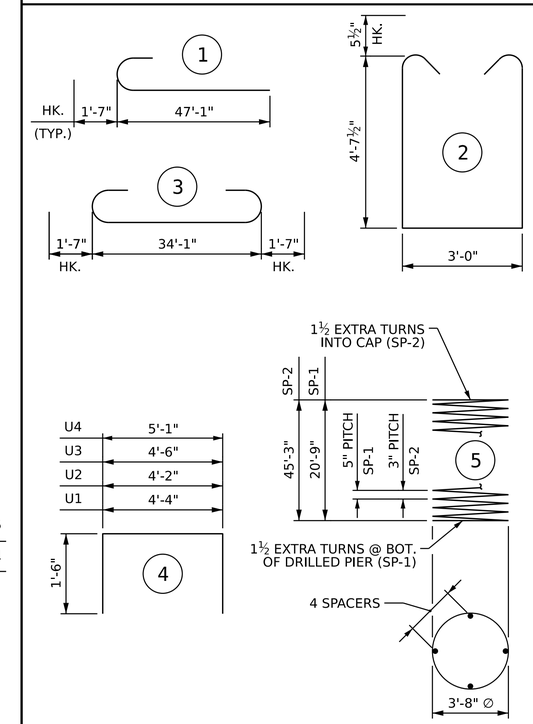

ALL BAR DIMENSIONS ARE OUT TO OUT

BILL OF MATERIAL

BENT 2

BAR	NO.	SIZE	TYPE	LENGTH	WEIGHT
B1	8	#11	3	37'-3"	1583
B2	8	#11	3	37'-3"	1583
B3	10	#5	STR	34'-1"	355
B4	16	#4	STR	11'-7"	124
B5	8	#4	STR	4'-10"	26
M1	32	#11	STR	28'-7"	4860
S1	128	#5	2	13'-2"	1758
U1	44	#4	4	7'-4"	216
U2	9	#4	4	7'-2"	43
U3	4	#4	4	7'-6"	20
U4	4	#4	4	8'-1"	22
V1	32	#11	1	48'-8"	8274
REINFORCING STEEL			=	18,864 LBS	
SP-1	2	✳	5	585'-3"	1221
SP-2	2	✳✳	5	2078'-11"	2777
SPIRAL COLUMN REINFORCING STEEL			=	3,998 LBS	

✳ THE SP-1 SPIRAL REINFORCING STEEL SHALL BE W31 OR D-31 COLD DRAWN WIRE OR #5 PLAIN OR DEFORMED BAR.

✳✳ THE SP-2 SPIRAL REINFORCING STEEL SHALL BE W20 OR D-20 COLD DRAWN WIRE OR #4 PLAIN OR DEFORMED BAR.

CLASS A CONCRETE BREAKDOWN:
(FOR BENT 2)

POUR #2 (COLUMNS)	41.9 C.Y.
POUR #3 (CAPS)	31.8 C.Y.
TOTAL CLASS A CONCRETE	73.7 C.Y.

DRILLED PIERS:
(FOR BENT 2)

DRILLED PIER CONCRETE POUR #1 (DRILLED PIERS)	25.0 C.Y.

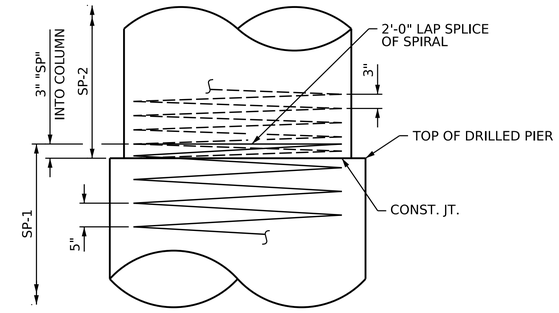

CONSTRUCTION JT. DETAIL

PROJECT NO. B-5716

ROCKINGHAM COUNTY

STATION: 18+80.50 -L-

SHEET 2 OF 2

PREPARED BY
MOTT MACDONALD
930 Main Campus Drive, Suite 200
Raleigh, NC 27606
(919) 532-2253
License No. F-0669
www.mottmac.com

NORTH CAROLINA PROFESSIONAL SEAL 043301 PROFESSIONAL ENGINEER JOHNNY T. WILLIAMS
Certificate of Authorization
27-Jun-2025

STATE OF NORTH CAROLINA
DEPARTMENT OF TRANSPORTATION
RALEIGH

SUBSTRUCTURE

BENT 2 DETAILS

REVISIONS						SHEET NO.
NO.	BY:	DATE:	NO.	BY:	DATE:	S01-38
1			3			TOTAL SHEETS
2			4			48

DOCUMENT NOT CONSIDERED FINAL UNLESS ALL SIGNATURES COMPLETED

DRAWN BY :	N. K. KAVANI	DATE :	7-2023
CHECKED BY :	R. L. DICKE	DATE :	3-2024
DESIGN ENGINEER OF RECORD:	J. T. WILLIAMS	DATE :	3-2024

12/16/2024 4:42:48 PM
R:\Structures\B16_01_TB0140\Plans\401_075_B5716_SMU_B2_S01-38_TB0140.dgn
KAVI06754

Docusign Envelope ID: 94478B89-8910-4784-B75E-FFD00CC24A0F

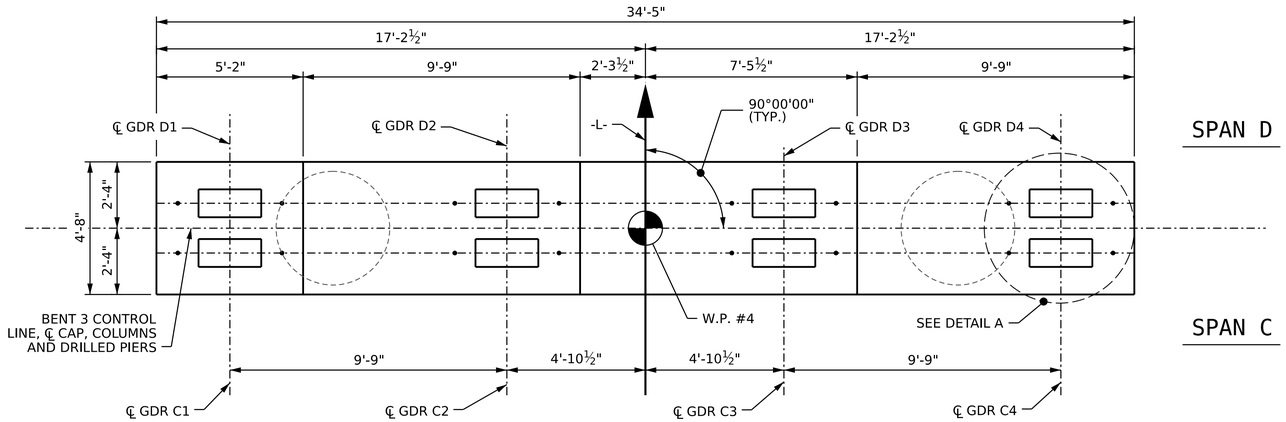

PLAN

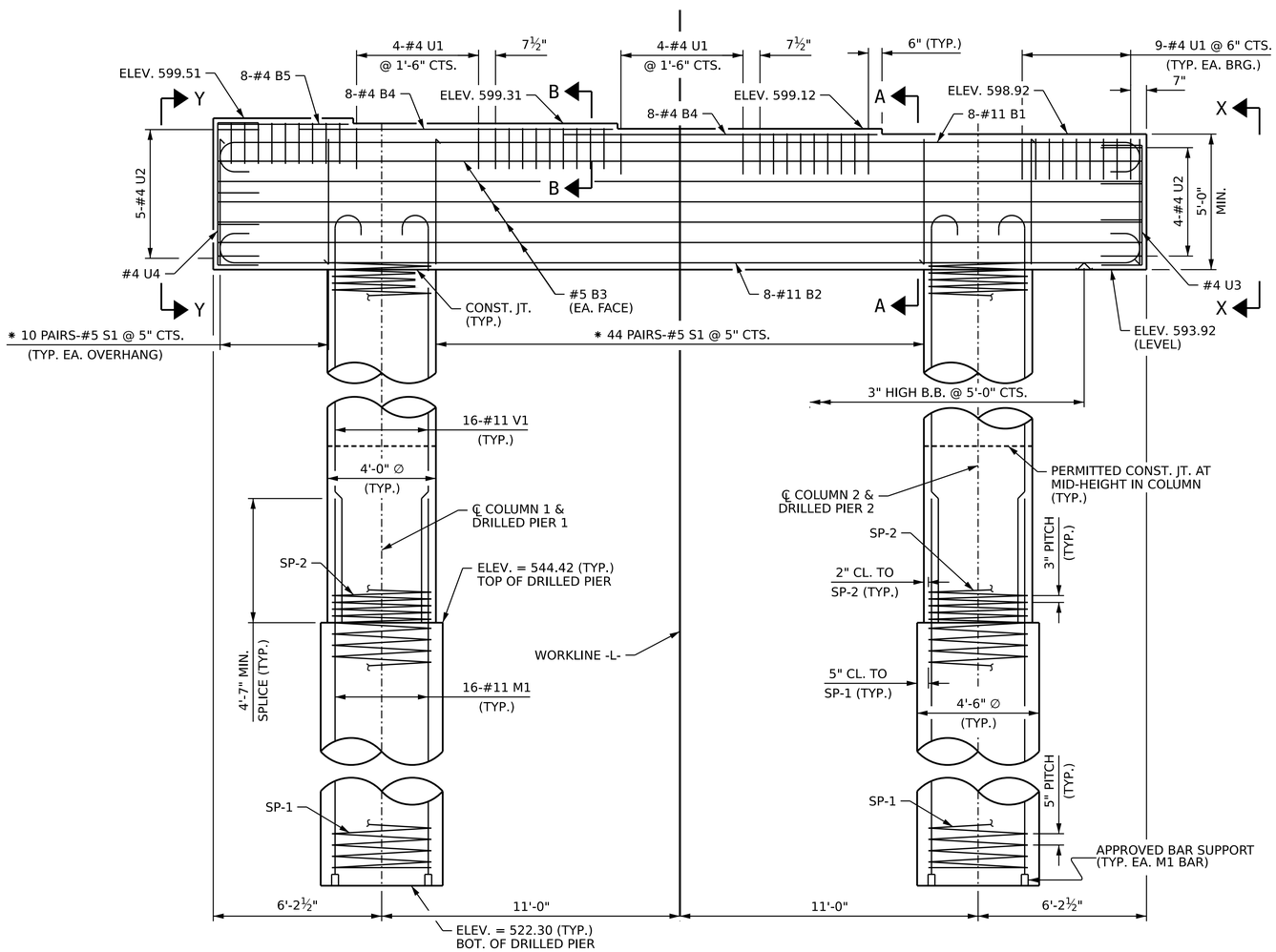

ELEVATION

NOTES:

STIRRUPS IN CAP MAY BE SHIFTED AS NECESSARY TO CLEAR ANCHOR BOLTS.

HOOKS ON "V" BARS MAY BE TURNED AS NECESSARY FOR PLACING REINFORCING STEEL.

ALL STEEL IN THE DRILLED PIERS IS INCLUDED IN THE PAY ITEMS FOR "REINFORCING STEEL" AND "SPIRAL COLUMN REINFORCING STEEL."

∗ INVERT ALTERNATE #5 S1 STIRRUP PAIRS.

THE LOCATION OF THE CONSTRUCTION JOINT IN THE DRILLED PIERS IS BASED ON AN APPROXIMATE GROUND LINE ELEVATION. IF THE CONSTRUCTION JOINT IS ABOVE THE ACTUAL GROUND ELEVATION, THE CONTRACTOR SHALL PLACE THE CONSTRUCTION JOINT 1 FOOT BELOW THE GROUND LINE.

THE CONTRACTOR'S ATTENTION IS CALLED TO THE FACT THAT THE LONGITUDINAL REINFORCEMENT FOR THE DRILLED PIERS IS DETAILED WITH 3 FEET OF EXTRA LENGTH.

THE TOP SURFACE AREAS OF THE BENT CAPS SHALL BE CURED IN ACCORDANCE WITH THE STANDARD SPECIFICATIONS EXCEPT THE MEMBRANE CURING COMPOUND METHOD SHALL NOT BE USED.

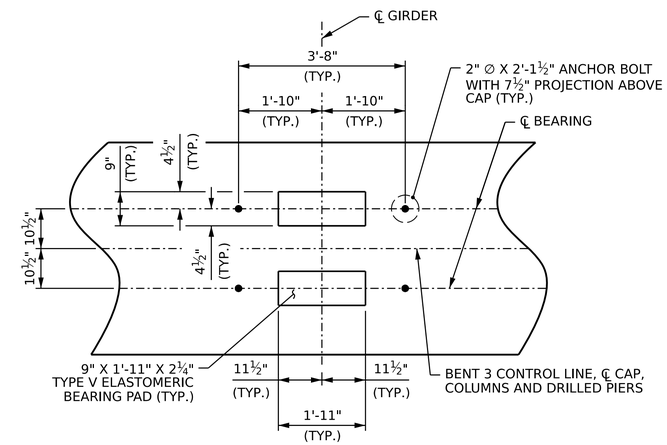

DETAIL A

PROJECT NO. B-5716
ROCKINGHAM COUNTY
STATION: 18+80.50 -L-

SHEET 1 OF 2

PREPARED BY
MOTT MACDONALD
930 Main Campus Drive, Suite 200
Raleigh, NC 27606
(919) 552-2253
License No. F-0669
www.mottmac.com

NORTH CAROLINA PROFESSIONAL SEAL 043301 ENGINEER JOHNATHAN T. WILLIAMS
27-JUN-2024

STATE OF NORTH CAROLINA
DEPARTMENT OF TRANSPORTATION
RALEIGH

SUBSTRUCTURE

BENT 3

REVISIONS						SHEET NO.
NO.	BY:	DATE:	NO.	BY:	DATE:	S01-39
1			3			TOTAL SHEETS
2			4			48

DOCUMENT NOT CONSIDERED FINAL UNLESS ALL SIGNATURES COMPLETED

DRAWN BY :	N. K. KAVANI	DATE :	6-2023
CHECKED BY :	R. L. DICKE	DATE :	3-2024
DESIGN ENGINEER OF RECORD:	J. T. WILLIAMS	DATE :	3-2024

12/15/2024 4:42:56 PM
R:\Structures\B5716_B7_Structures\BRC_01_780140\Plans\401_077_B5716_SMU_B3_S01-39_780140.dgn
KAVI06794

Docusign Envelope ID: 94478B89-8910-4784-B75E-FFD00CC24A0F

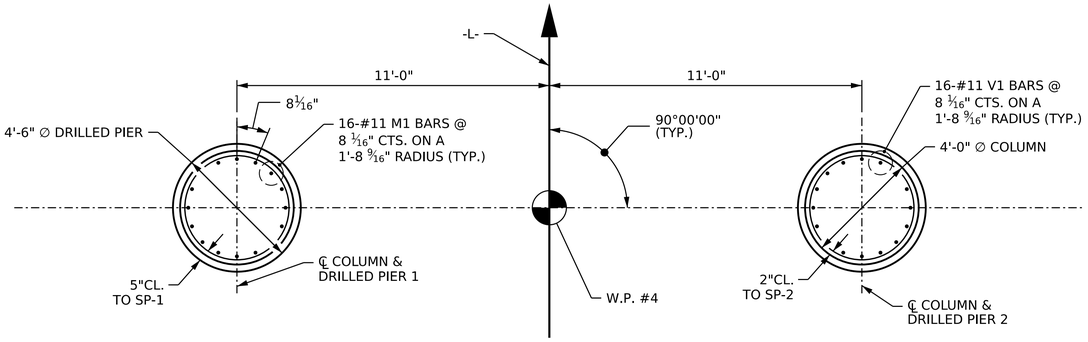

PLAN OF DRILLED PIER & COLUMNS

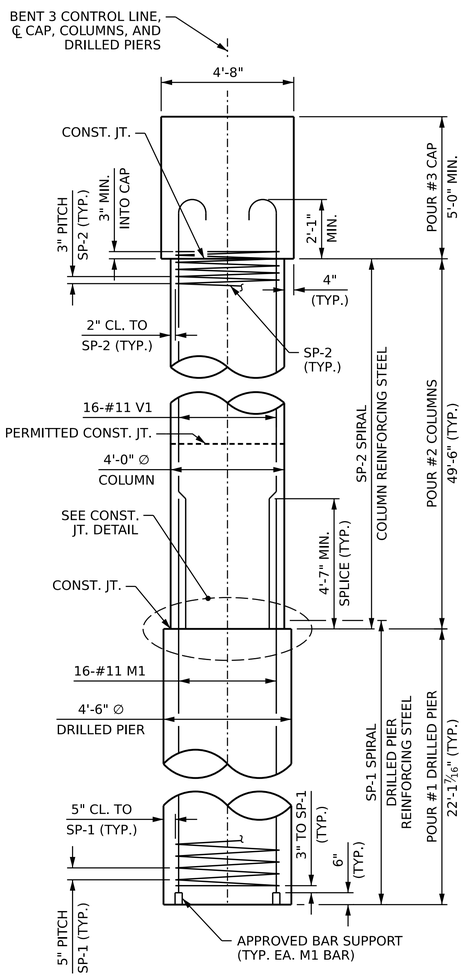

END ELEVATION

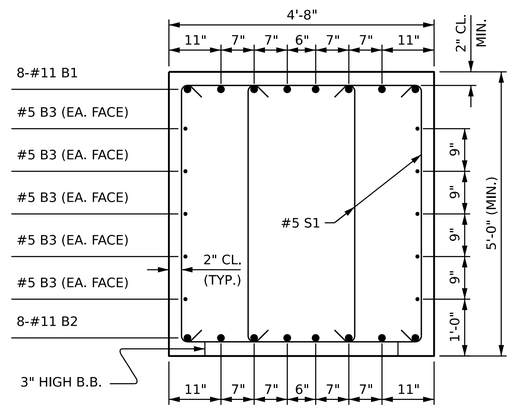

SECTION A-A

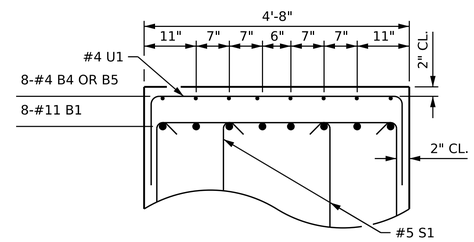

SECTION B-B

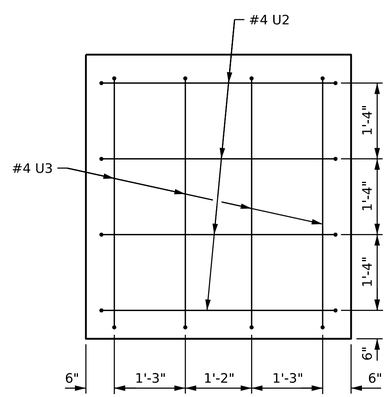

VIEW X-X

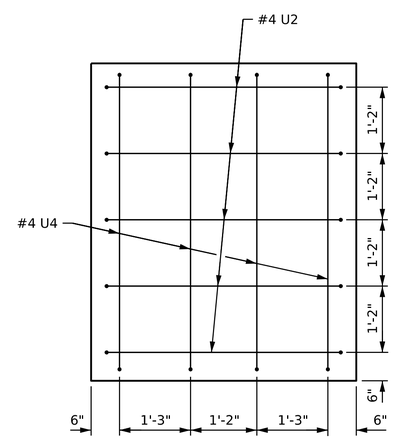

VIEW Y-Y

BAR TYPES

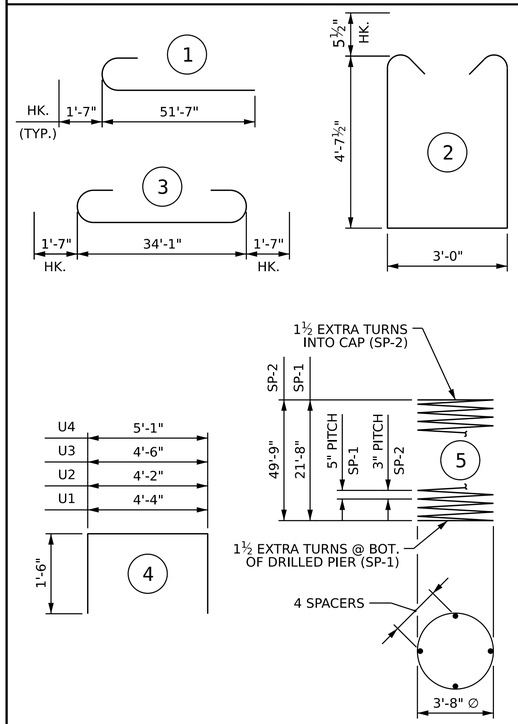

ALL BAR DIMENSIONS ARE OUT TO OUT

BILL OF MATERIAL

BENT 3

BAR	NO.	SIZE	TYPE	LENGTH	WEIGHT
B1	8	#11	3	37'-3"	1583
B2	8	#11	3	37'-3"	1583
B3	10	#5	STR	34'-1"	355
B4	16	#4	STR	11'-7"	124
B5	8	#4	STR	4'-10"	26
M1	32	#11	STR	29'-6"	5015
S1	128	#5	2	13'-2"	1758
U1	44	#4	4	7'-4"	216
U2	9	#4	4	7'-2"	43
U3	4	#4	4	7'-6"	20
U4	4	#4	4	8'-1"	22
V1	32	#11	1	53'-2"	9039
REINFORCING STEEL			=	19,784 LBS	
SP-1	2	✳	5	610'-10"	1274
SP-2	2	✳✳	5	2283'-11"	3051
SPIRAL COLUMN REINFORCING STEEL			=	4,325 LBS	

✳ THE SP-1 SPIRAL REINFORCING STEEL SHALL BE W31 OR D-31 COLD DRAWN WIRE OR #5 PLAIN OR DEFORMED BAR.

✳✳ THE SP-2 SPIRAL REINFORCING STEEL SHALL BE W20 OR D-20 COLD DRAWN WIRE OR #4 PLAIN OR DEFORMED BAR.

CLASS A CONCRETE BREAKDOWN: (FOR BENT 3)	
POUR #2 (COLUMNS)	46.1 C.Y.
POUR #3 (CAPS)	31.3 C.Y.
TOTAL CLASS A CONCRETE	77.4 C.Y.

DRILLED PIERS: (FOR BENT 3)	
DRILLED PIER CONCRETE POUR #1 (DRILLED PIERS)	26.1 C.Y.

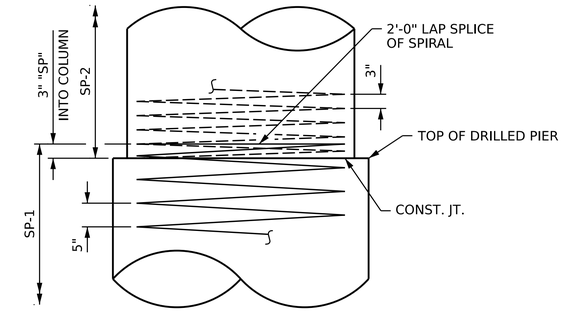

CONSTRUCTION JT. DETAIL

PROJECT NO. B-5716

ROCKINGHAM COUNTY

STATION: 18+80.50 -L-

SHEET 2 OF 2

PREPARED BY

MOTT MACDONALD

930 Main Campus Drive, Suite 200
Raleigh, NC 27606
(919) 552-2253
License No. F-0669
www.mottmac.com

NORTH CAROLINA PROFESSIONAL SEAL 043301 ENGINEER JONATHAN T. WILLIAMS

27-Jun-2024

STATE OF NORTH CAROLINA
DEPARTMENT OF TRANSPORTATION
RALEIGH

SUBSTRUCTURE

BENT 3 DETAILS

REVISIONS						SHEET NO.
NO.	BY:	DATE:	NO.	BY:	DATE:	S01-40
1			3			TOTAL SHEETS
2			4			48

DOCUMENT NOT CONSIDERED FINAL UNLESS ALL SIGNATURES COMPLETED

DRAWN BY :	N. K. KAVANI	DATE :	6-2023
CHECKED BY :	R. L. DICKE	DATE :	3-2024
DESIGN ENGINEER OF RECORD:	J. T. WILLIAMS	DATE :	3-2024

12/16/2024 4:42:52 PM
R:\Structures\B5716_SMU_B3_S01-40_780140.dgn
KAVI06734

Docusign Envelope ID: 94478B89-8910-4784-B75E-FFD00CC24A0F

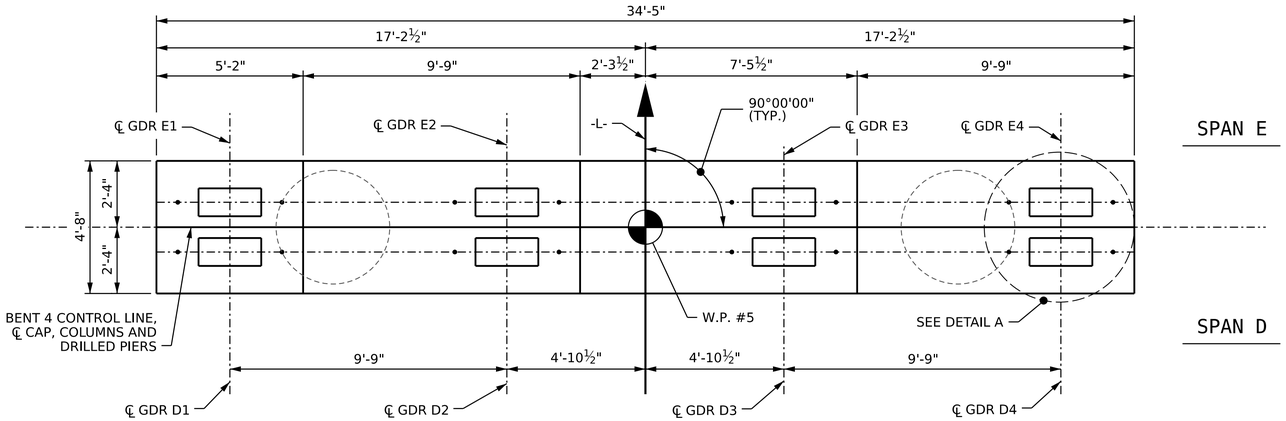

PLAN

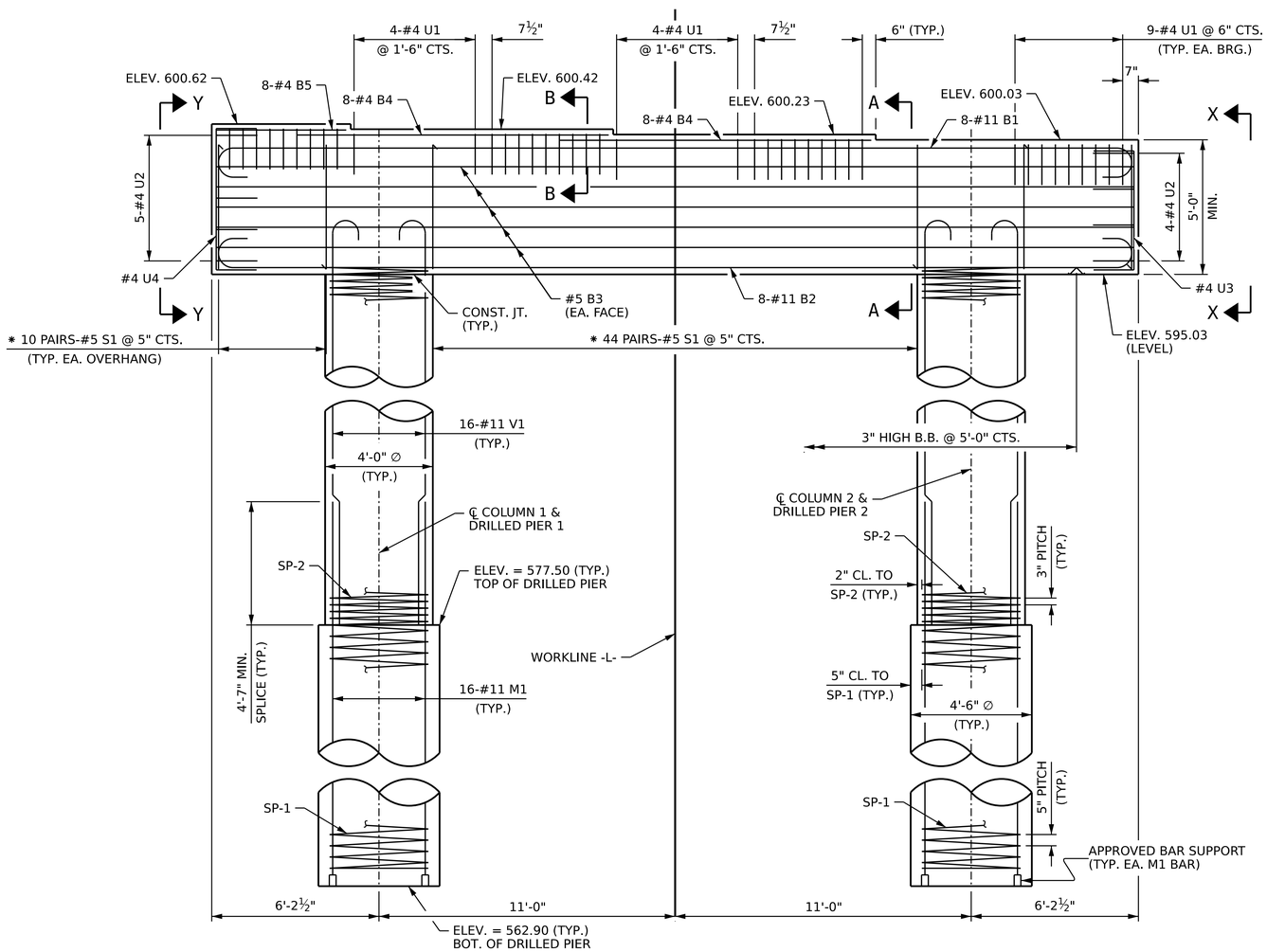

ELEVATION

NOTES:

STIRRUPS IN CAP MAY BE SHIFTED AS NECESSARY TO CLEAR ANCHOR BOLTS.

HOOKS ON "V" BARS MAY BE TURNED AS NECESSARY FOR PLACING REINFORCING STEEL.

ALL STEEL IN THE DRILLED PIERS IS INCLUDED IN THE PAY ITEMS FOR "REINFORCING STEEL" AND "SPIRAL COLUMN REINFORCING STEEL."

✱ INVERT ALTERNATE #5 S1 STIRRUP PAIRS.

THE LOCATION OF THE CONSTRUCTION JOINT IN THE DRILLED PIERS IS BASED ON AN APPROXIMATE GROUND LINE ELEVATION. IF THE CONSTRUCTION JOINT IS ABOVE THE ACTUAL GROUND ELEVATION, THE CONTRACTOR SHALL PLACE THE CONSTRUCTION JOINT 1 FOOT BELOW THE GROUND LINE.

THE CONTRACTOR'S ATTENTION IS CALLED TO THE FACT THAT THE LONGITUDINAL REINFORCEMENT FOR THE DRILLED PIER IS DETAILED WITH 3 FEET OF EXTRA LENGTH.

THE TOP SURFACE AREAS OF THE BENT CAPS SHALL BE CURED IN ACCORDANCE WITH THE STANDARD SPECIFICATIONS EXCEPT THE MEMBRANE CURING COMPOUND METHOD SHALL NOT BE USED.

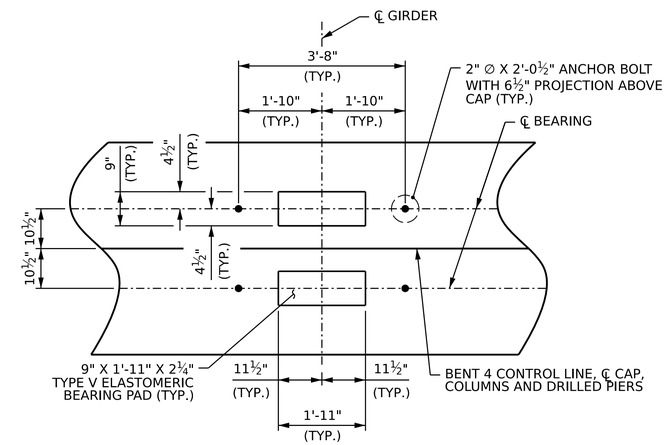

DETAIL A

PROJECT NO. B-5716

ROCKINGHAM COUNTY

STATION: 18+80.50 -L-

SHEET 1 OF 2

PREPARED BY

MOTT MACDONALD
930 Main Campus Drive, Suite 200
Raleigh, NC 27606
(919) 552-2253
License No. F-0669
www.mottmac.com

NORTH CAROLINA PROFESSIONAL SEAL 043301 ENGINEER JONATHAN T. WILLIAMS
CF88347B-9E0A-4E0A-
27-Jun-2025

STATE OF NORTH CAROLINA
DEPARTMENT OF TRANSPORTATION
RALEIGH

SUBSTRUCTURE

BENT 4

REVISIONS						SHEET NO.
NO.	BY:	DATE:	NO.	BY:	DATE:	S01-41
1			3			TOTAL SHEETS
2			4			48

DOCUMENT NOT CONSIDERED FINAL UNLESS ALL SIGNATURES COMPLETED

DRAWN BY :	N. K. KAVANI	DATE :	7-2023
CHECKED BY :	R. L. DICKE	DATE :	3-2024
DESIGN ENGINEER OF RECORD:	J. T. WILLIAMS	DATE :	3-2024

12/15/2024 4:42:53 PM
R:\Structures\B5716_B70140\Plans\401_081_B5716_SMU_B4_S01-41_T80140.dgn
KAVI06794

Docusign Envelope ID: 94478B89-8910-4784-B75E-FFD00CC24A0F

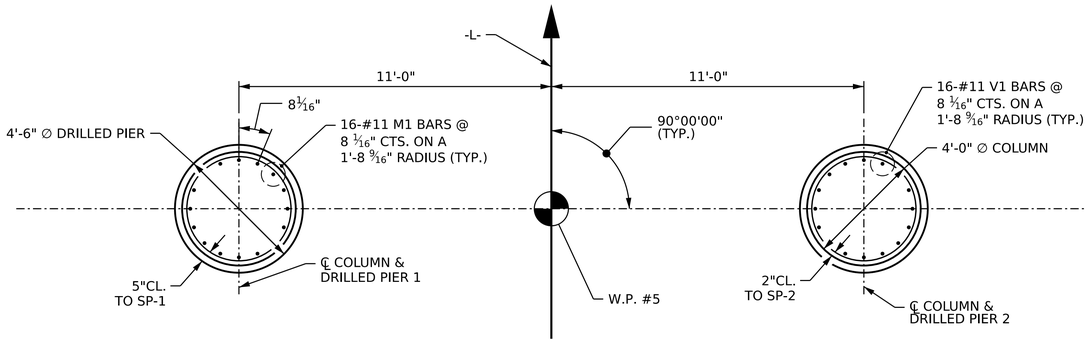

PLAN OF DRILLED PIER & COLUMNS

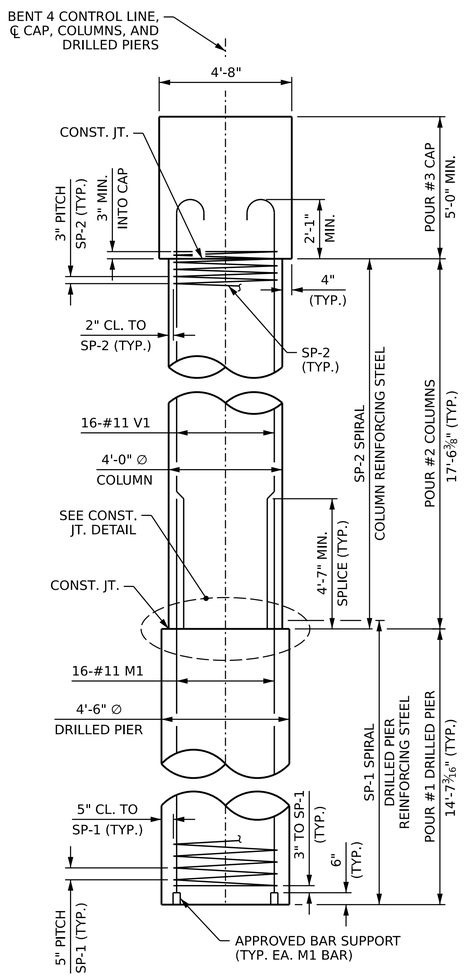

END ELEVATION

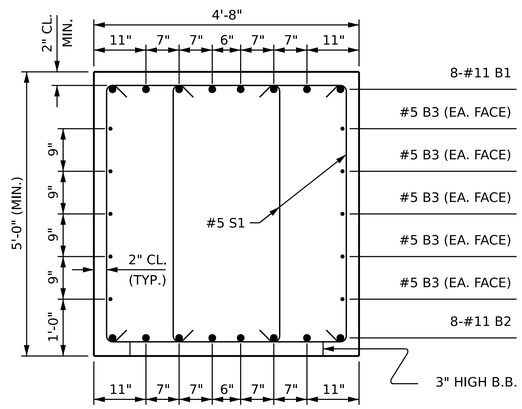

SECTION A-A

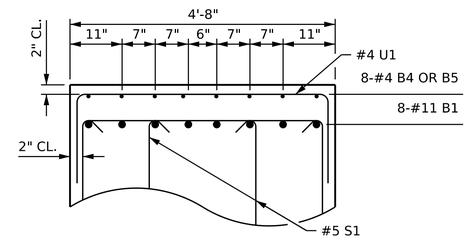

SECTION B-B

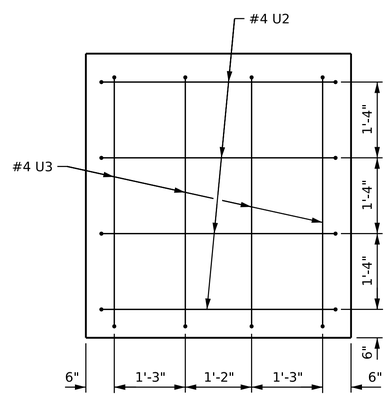

VIEW X-X

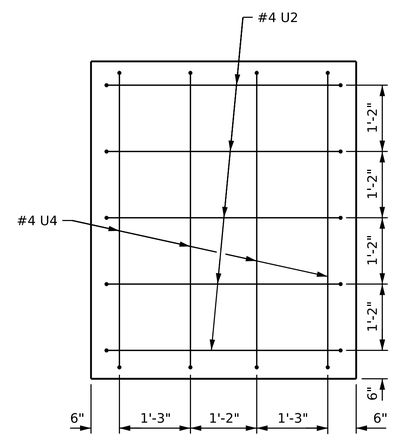

VIEW Y-Y

BAR TYPES

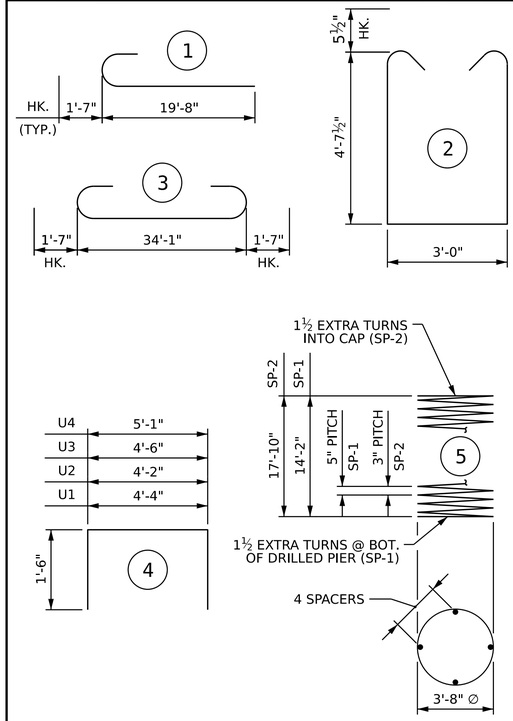

ALL BAR DIMENSIONS ARE OUT TO OUT

BILL OF MATERIAL

BENT 4

BAR	NO.	SIZE	TYPE	LENGTH	WEIGHT
B1	8	#11	3	37'-3"	1583
B2	8	#11	3	37'-3"	1583
B3	10	#5	STR	34'-1"	355
B4	16	#4	STR	11'-7"	124
B5	8	#4	STR	4'-10"	26
M1	32	#11	STR	22'-0"	3740
S1	128	#5	2	13'-2"	1758
U1	44	#4	4	7'-4"	216
U2	9	#4	4	7'-2"	43
U3	4	#4	4	7'-6"	20
U4	4	#4	4	8'-1"	22
V1	32	#11	1	21'-3"	3613
REINFORCING STEEL			=	13,083 LBS	
SP-1	2	✳	5	406'-3"	847
SP-2	2	✳✳	5	828'-9"	1107
SPIRAL COLUMN REINFORCING STEEL			=	1,954 LBS	

✳ THE SP-1 SPIRAL REINFORCING STEEL SHALL BE W31 OR D-31 COLD DRAWN WIRE OR #5 PLAIN OR DEFORMED BAR.

✳✳ THE SP-2 SPIRAL REINFORCING STEEL SHALL BE W20 OR D-20 COLD DRAWN WIRE OR #4 PLAIN OR DEFORMED BAR.

CLASS A CONCRETE BREAKDOWN: (FOR BENT 4)	
POUR #2 (COLUMNS)	16.4 C.Y.
POUR #3 (CAPS)	31.3 C.Y.
TOTAL CLASS A CONCRETE	47.7 C.Y.

DRILLED PIERS: (FOR BENT 4)	
DRILLED PIER CONCRETE POUR #1 (DRILLED PIERS)	17.3 C.Y.

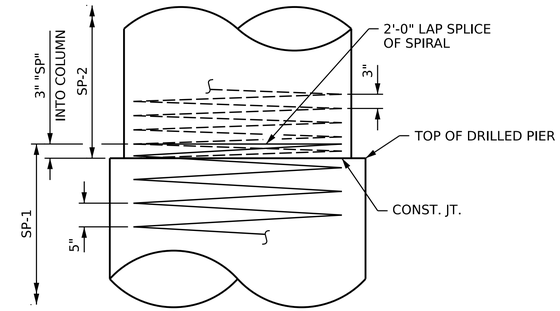

CONSTRUCTION JT. DETAIL

PROJECT NO. B-5716

ROCKINGHAM COUNTY

STATION: 18+80.50 -L-

SHEET 2 OF 2

PREPARED BY
MOTT MACDONALD
930 Main Campus Drive, Suite 200
Raleigh, NC 27606
(919) 532-2253
License No. F-0669
www.mottmac.com

NORTH CAROLINA PROFESSIONAL SEAL 043301 ENGINEER JOHN T. WILLIAMS
Digitally signed by
27-Jun-2025

STATE OF NORTH CAROLINA
DEPARTMENT OF TRANSPORTATION
RALEIGH

SUBSTRUCTURE

BENT 4 DETAILS

REVISIONS						SHEET NO.
NO.	BY:	DATE:	NO.	BY:	DATE:	S01-42
1			3			TOTAL SHEETS
2			4			48

DOCUMENT NOT CONSIDERED FINAL UNLESS ALL SIGNATURES COMPLETED

DRAWN BY :	N. K. KAVANI	DATE :	7-2023
CHECKED BY :	R. L. DICKE	DATE :	3-2024
DESIGN ENGINEER OF RECORD:	J. T. WILLIAMS	DATE :	3-2024

12/16/2024 4:42:55 PM
R:\Structures\B5716_SMU_B4_S01-42_780140.dgn
KAVI06794

Docusign Envelope ID: 94478B89-8910-4784-B75E-FFD00CC24A0F

NOTES:

STIRRUPS IN CAP MAY BE SHIFTED AS NECESSARY TO CLEAR ANCHOR BOLTS.

BACKWALL SHALL BE PLACED BEFORE APPLYING THE EPOXY PROTECTIVE COATING.

THE TOP SURFACE AREAS OF THE END BENT CAPS SHALL BE CURED IN ACCORDANCE WITH THE STANDARD SPECIFICATIONS EXCEPT THE MEMBRANE CURING COMPOUND METHOD SHALL NOT BE USED.

THE TOP SURFACE OF THE CAP EXCEPT THE BRIDGE SEAT BUILDUPS SHALL BE SLOPED TRANSVERSELY FROM THE FILL FACE TO THE BACK FACE AT THE RATE OF 2%.

2'-0" ∅ PIPE SLEEVE SHALL BE INSTALLED ALONG LENGTH OF PILE FROM EXISTING GROUND TO BOTTOM OF CAP. SEE RETAINING WALL PLANS FOR ADDITIONAL DETAILS.

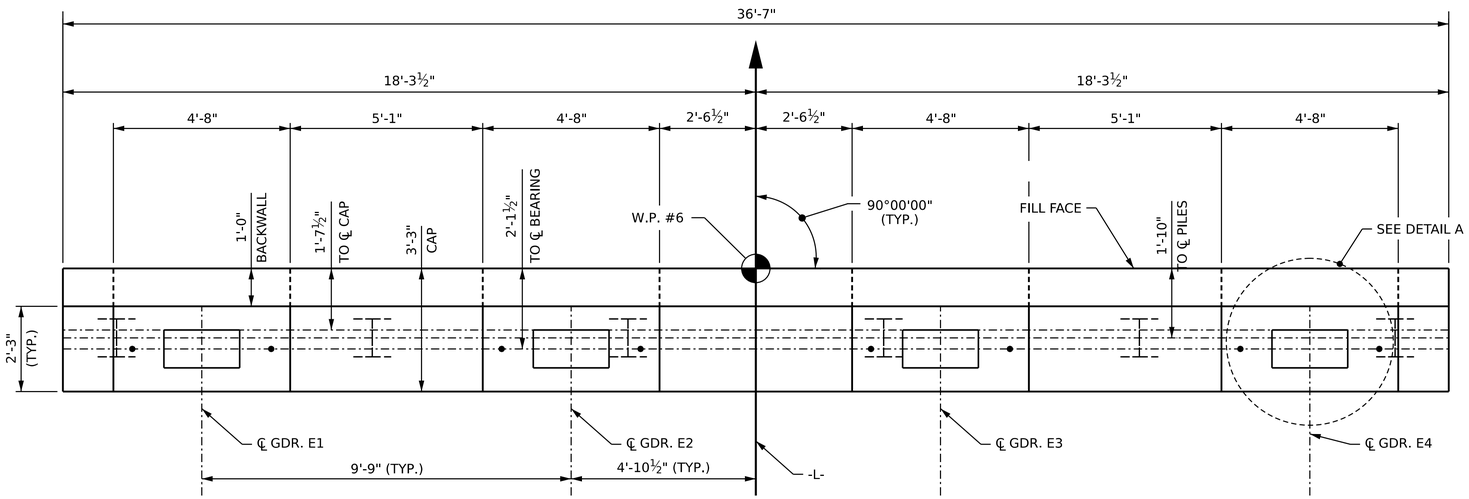

PLAN

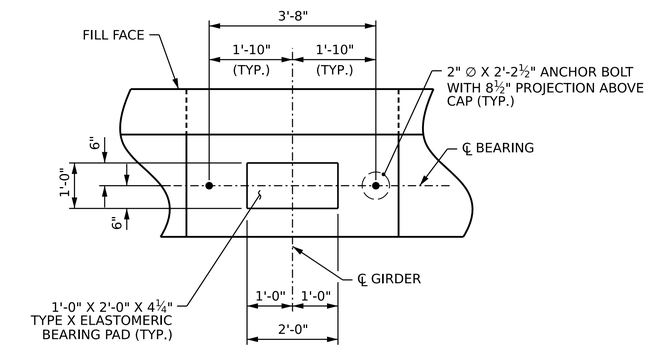

DETAIL A

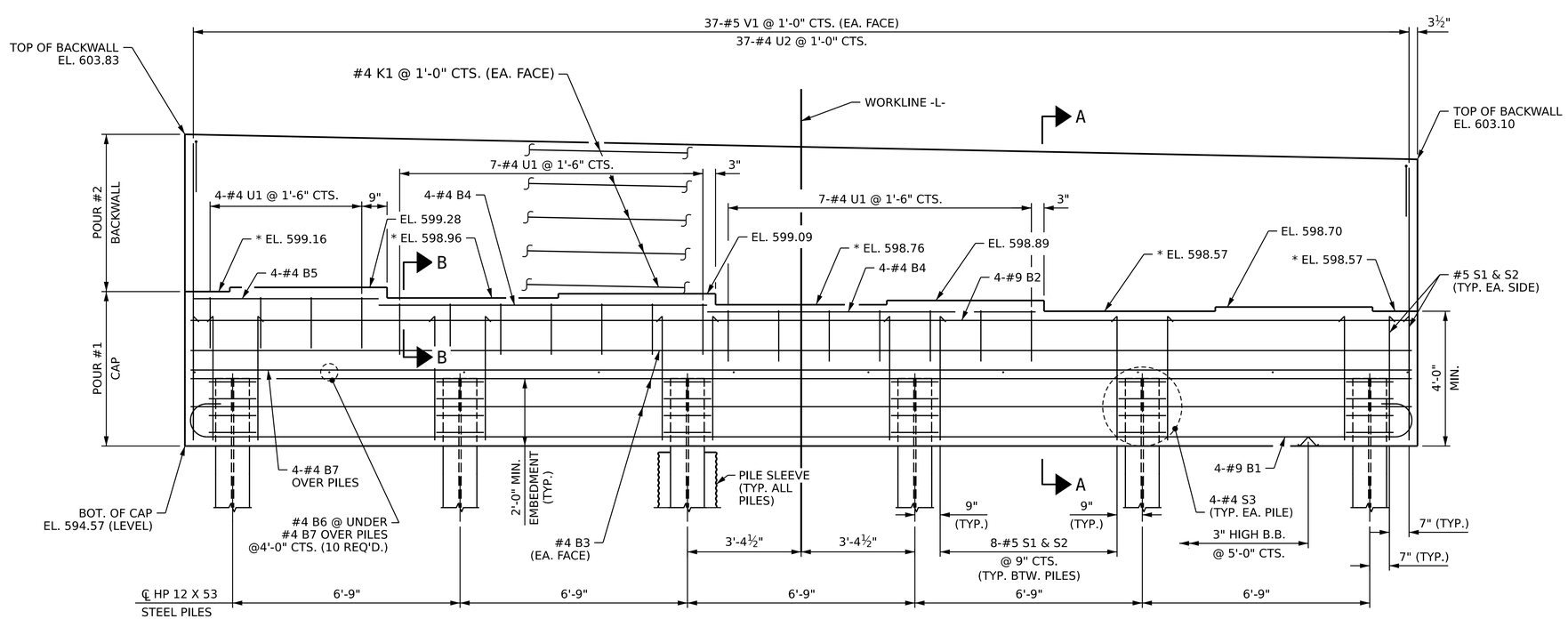

ELEVATION

* FOR LOCATION ON CAP, SEE SHEET 2 OF 2.

PROJECT NO. B-5716
ROCKINGHAM COUNTY
STATION: 18+80.50 -L-

SHEET 1 OF 2

PREPARED BY
MOTT MACDONALD
930 Main Campus Drive, Suite 200
Raleigh, NC 27606
(919) 552-2233
License No. F-0669
www.mottmac.com

NORTH CAROLINA PROFESSIONAL SEAL 043301 ENGINEER JONATHAN T. WILLIAMS
27-Jun-2025

STATE OF NORTH CAROLINA
DEPARTMENT OF TRANSPORTATION
RALEIGH

SUBSTRUCTURE

END BENT 2

REVISIONS						SHEET NO.
NO.	BY:	DATE:	NO.	BY:	DATE:	S01-43
1			3			TOTAL SHEETS
2			4			48

DRAWN BY : N. K. KAVANI DATE : 8-2023
CHECKED BY : J. T. WILLIAMS DATE : 3-2024
DESIGN ENGINEER OF RECORD: J. T. WILLIAMS DATE : 3-2024

DOCUMENT NOT CONSIDERED FINAL UNLESS ALL SIGNATURES COMPLETED

3/11/2025 11:23:10 AM
S:\Workgroup\Hydraulics\WILS7077\d0171488\401_085_B5716_SMU_E2_S01-43_780140.dgn

Docusign Envelope ID: 94478B89-8910-4784-B75E-FFD00CC24A0F

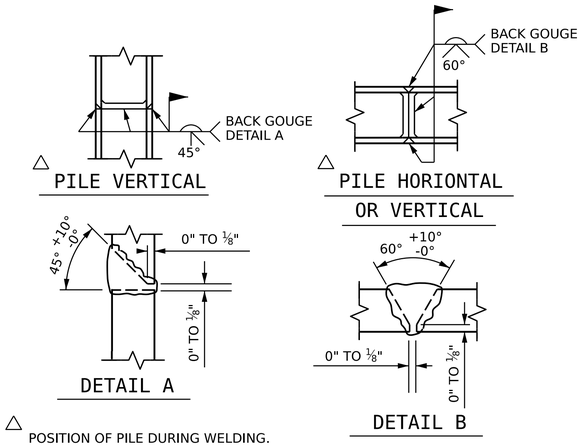

PILE SPLICE DETAILS

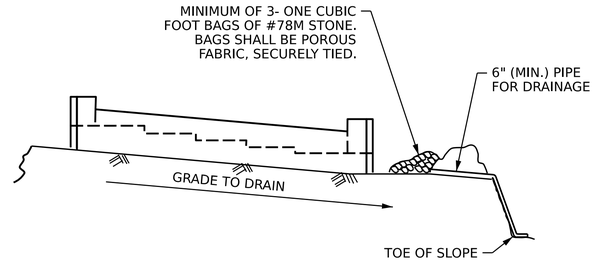

BAGGED STONE AND PIPE SHALL BE PLACED IMMEDIATELY AFTER COMPLETION OF END BENT EXCAVATION. PIPE MAY BE EITHER CONCRETE, CORRUGATED STEEL, CORRUGATED ALUMINUM ALLOY, OR CORRUGATED PLASTIC. PERFORATED PIPE WILL NOT BE ALLOWED.

BAGGED STONE SHALL REMAIN IN PLACE UNTIL THE ENGINEER DIRECTS THAT IT BE REMOVED. THE CONTRACTOR SHALL REMOVE AND DISPOSE OF SILT ACCUMULATIONS AT BAGGED STONE WHEN SO DIRECTED BY THE ENGINEER. BAGS SHALL BE REMOVED AND REPLACED WHENEVER THE ENGINEER DETERMINES THAT THEY HAVE DETERIORATED AND LOST THEIR EFFECTIVENESS.

NO SEPARATE PAYMENT WILL BE MADE FOR THIS WORK AND THE ENTIRE COST OF THIS WORK SHALL BE INCLUDED IN THE UNIT CONTRACT PRICE BID FOR THE SEVERAL PAY ITEMS.

TEMPORARY DRAINAGE AT END BENT

BAR TYPES

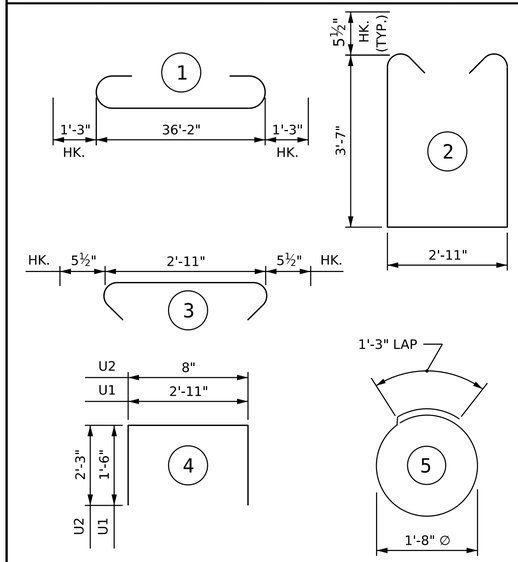

ALL BAR DIMENSIONS ARE OUT TO OUT

BILL OF MATERIAL

END BENT 2

BAR	NO.	SIZE	TYPE	LENGTH	WEIGHT
B1	4	#9	1	38'-8"	526
B2	4	#9	1	38'-8"	526
B3	6	#4	STR	36'-3"	145
B4	8	#4	STR	9'-9"	52
B5	4	#4	STR	5'-7"	15
B6	10	#4	STR	2'-11"	19
B7	4	#4	STR	36'-3"	97
K1	10	#4	STR	36'-3"	242
S1	44	#5	2	11'-0"	505
S2	44	#5	3	3'-10"	176
S3	24	#4	5	6'-6"	104
U1	18	#4	4	5'-11"	71
U2	37	#4	4	5'-2"	128
V1	74	#5	STR	8'-2"	630

REINFORCING STEEL = 3,236 LBS

CLASS A CONCRETE BREAKDOWN:
(FOR END BENT 2)

POUR #1 (CAP)	19.1 C.Y.
POUR #2 (BACKWALL)	6.3 C.Y.
TOTAL CLASS A CONCRETE	25.4 C.Y.

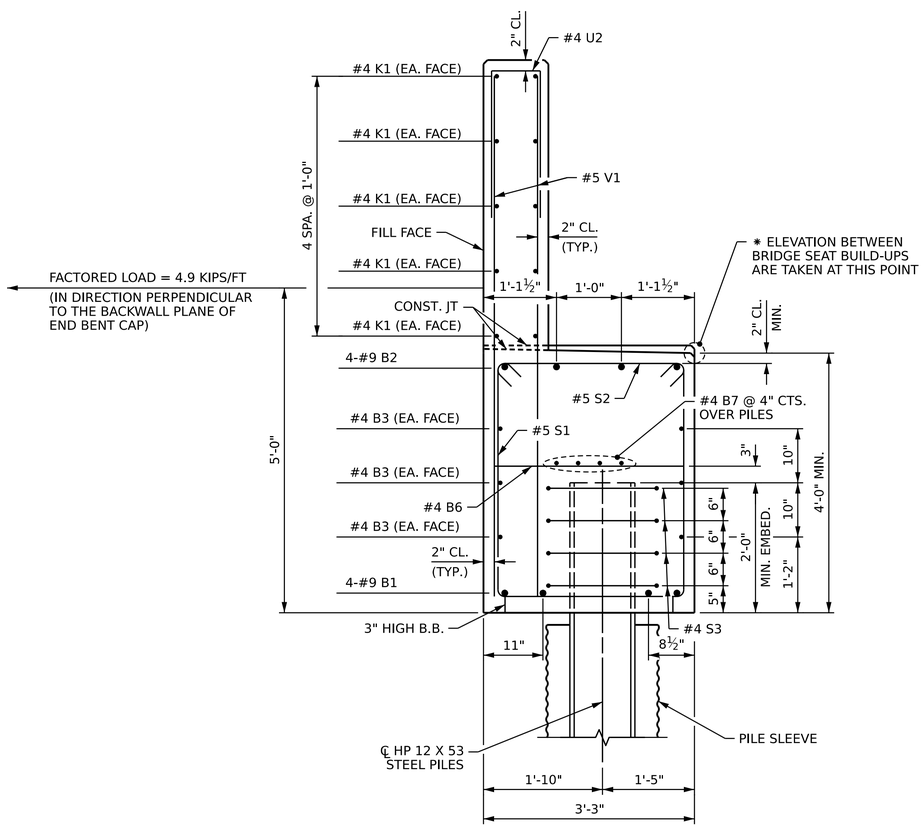

SECTION A-A

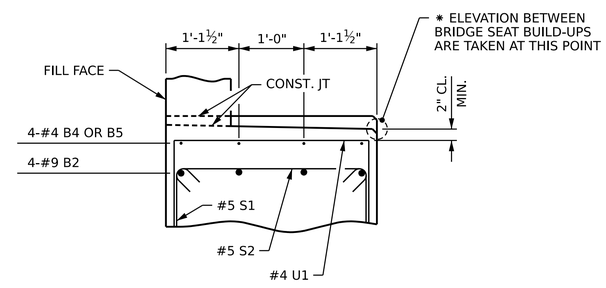

SECTION B-B

PROJECT NO. B-5716
ROCKINGHAM COUNTY
STATION: 18+80.50 -L-

SHEET 2 OF 2

PREPARED BY
MOTT MACDONALD
930 Main Campus Drive, Suite 200
Raleigh, NC 27606
(919) 552-2253
License No. F-0669
www.mottmac.com

NORTH CAROLINA PROFESSIONAL SEAL 043301 ENGINEER JOHNATHAN T. WILLIAMS
27-Jun-2025

STATE OF NORTH CAROLINA
DEPARTMENT OF TRANSPORTATION
RALEIGH

SUBSTRUCTURE

END BENT 2

REVISIONS						SHEET NO.
NO.	BY:	DATE:	NO.	BY:	DATE:	S01-44
1			3			TOTAL SHEETS
2			4			48

DOCUMENT NOT CONSIDERED FINAL UNLESS ALL SIGNATURES COMPLETED

DRAWN BY :	N. K. KAVANI	DATE :	8-2023
CHECKED BY :	J. T. WILLIAMS	DATE :	3-2024
DESIGN ENGINEER OF RECORD:	J. T. WILLIAMS	DATE :	3-2024

3/7/2025 5:40:16 PM
C:\Users\kaing\bimrc\dlt_transit\wi157077\d0171488\401_087_B5716_SMU_E2_S01-44_780140.dgn
WI157077

Docusign Envelope ID: 94478B89-8910-4784-B75E-FFD00CC24A0F

NOTES:

FOR BERM WIDTH DIMENSIONS, SEE GENERAL DRAWING.

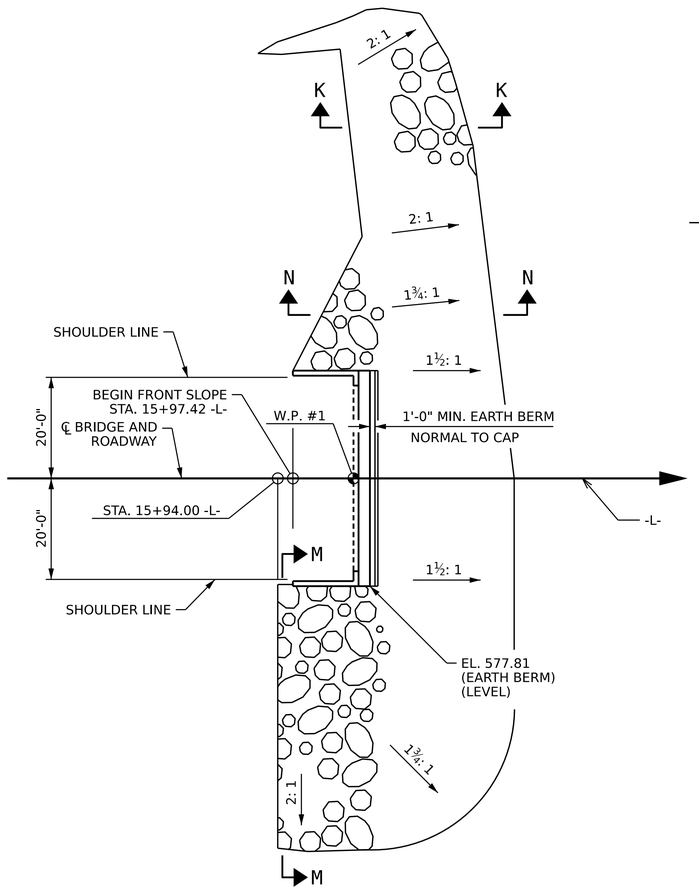

END BENT 1

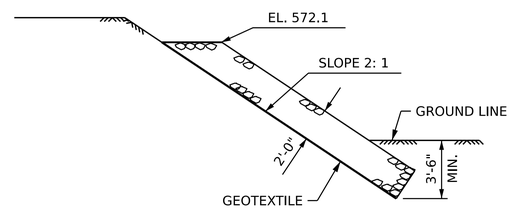

SECTION K-K

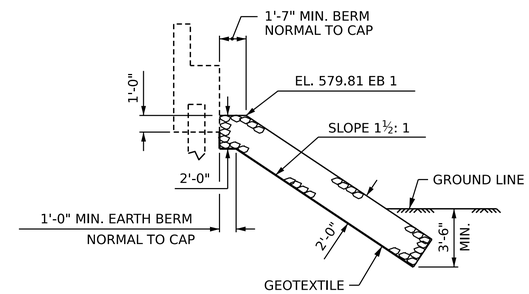

℄ SECTION
BERM RIP RAPPED

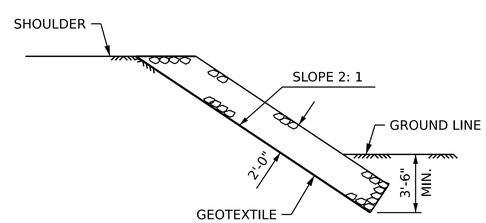

SECTION M-M

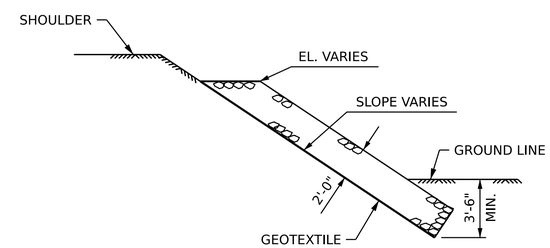

SECTION N-N

PROJECT NO. B-5716
ROCKINGHAM COUNTY
STATION: 18+80.50 -L-

ESTIMATED QUANTITIES

BRIDGE @ 18+80.50 -L-	RIP RAP CLASS II (2'-0" THICK)	GEOTEXTILE FOR DRAINAGE
	TONS	SQUARE YARDS
END BENT 1	708	787

PREPARED BY
MOTT MACDONALD
930 Main Campus Drive, Suite 200
Raleigh, NC 27606
(919) 552-2253
License No. F-0669
www.mottmac.com

NORTH CAROLINA PROFESSIONAL SEAL 043301 ENGINEER JONATHAN T. WILLIAMS
27-Jun-2024

STATE OF NORTH CAROLINA
DEPARTMENT OF TRANSPORTATION
RALEIGH

RIP RAP DETAILS

DOCUMENT NOT CONSIDERED FINAL UNLESS ALL SIGNATURES COMPLETED

REVISIONS								SHEET NO.
NO.	BY:	DATE:	NO.	BY:	DATE:			S01-45
1			3					TOTAL SHEETS
2			4					48

DRAWN BY :	N. K. KAVANI	DATE :	7-2023
CHECKED BY :	J. T. WILLIAMS	DATE :	3-2024
DESIGN ENGINEER OF RECORD:	J. T. WILLIAMS	DATE :	3-2024

12/16/2024 4:43:00 PM
R:\Structures\BRC_01_780140\Plans\401_089_B5716_SMU_RR_S01-45_780140.dgn
KAVI06794

Docusign Envelope ID: 94478B89-8910-4784-B75E-FFD00CC24A0F

NOTES:

SLOPE PROTECTION SHALL CONSIST OF 4" POURED-IN-PLACE CONCRETE PAVING AS SHOWN IN THE DETAILS ON THIS SHEET. CONCRETE SHALL BE CLASS "B". THE CONCRETE SURFACE SHALL BE FLOATED WITH A WOODEN FLOAT AND FINISHED. WELDED WIRE FABRIC REINFORCING SHALL BE 6 X 6 - W1.4 X 1.4. THE COST OF THE WELDED WIRE FABRIC SHALL BE INCLUDED IN THE CONTRACT UNIT PRICE BID PER SQUARE YARD FOR SLOPE PROTECTION.

THE SLOPE PROTECTION IS DETAILED TO FIT WITH THE RETAINING WALL COPING DETAIL A. IF RETAINING WALL COPING DETAIL B IS USED, SLOPE PROTECTION SHALL BE ADJUSTED TO FIT. COORDINATE WITH THE RETAINING WALL FABRICATOR FOR ACTUAL WALL THICNKNESS AND COPING TO BE USED. ADJUST SLOPE PROTECTION QUANTITIES AS NECESSARY TO FIT COPING USED.

BRIDGE @ 18+80.50 -L-	4 INCH SLOPE PROTECTION	WELDED WIRE FABRIC (36" WIDE)
	SQUARE YARDS	APPROX. L.F.
END BENT 2	10	37

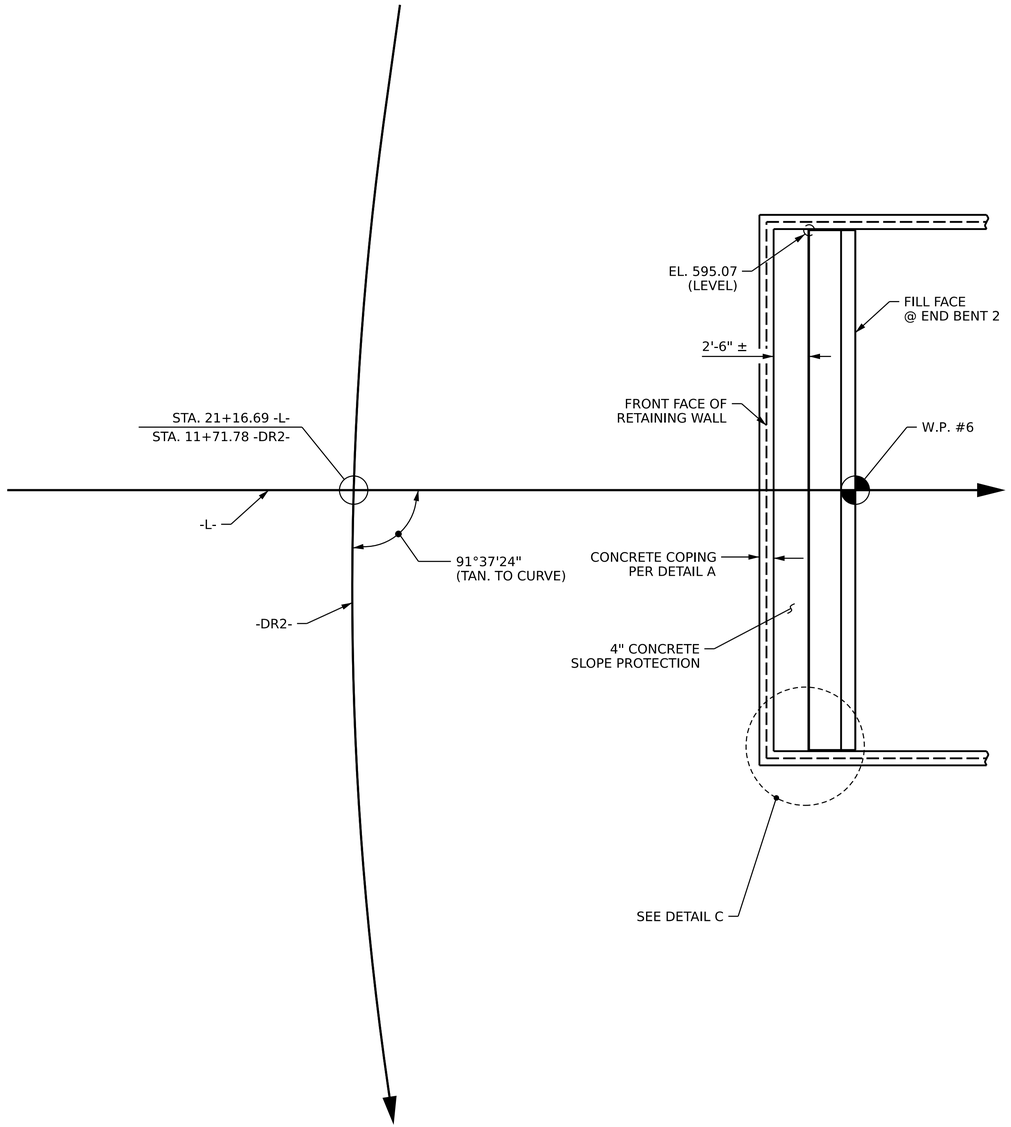

PLAN

ELEVATION SHOWN IS AT TOP OF
SLOPE PROTECTION AT FACE OF FOOTING

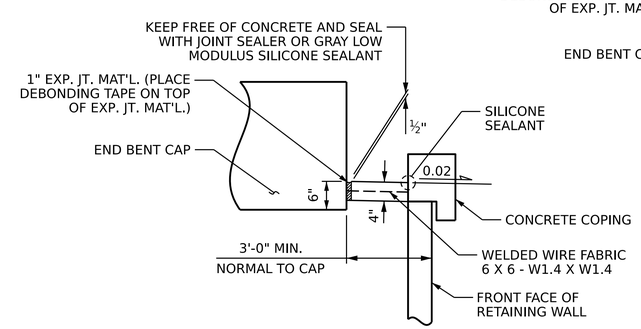

DETAIL A

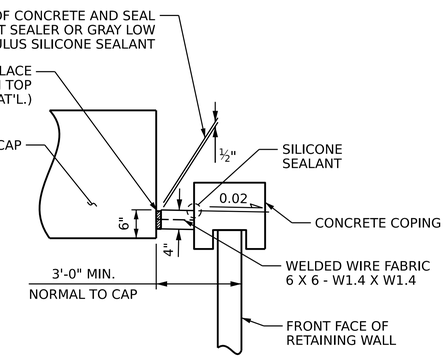

DETAIL B

COPING DETAILS

THE CONTRACTOR HAS THE OPTION OF USING COPING IN DETAILS A OR B,
SEE RETAINING ABUTMENT WALL WITH PANELS TYPICAL AND COPING
DETAILS FOR RETAINING WALL

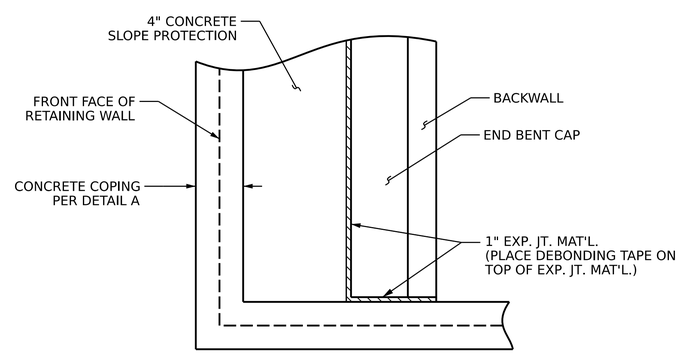

DETAIL C

PROJECT NO. B-5716
ROCKINGHAM COUNTY
STATION: 18+80.50 -L-

PREPARED BY
MOTT MACDONALD
930 Main Campus Drive, Suite 200
Raleigh, NC 27606
(919) 552-2253
License No. F-0669
www.mottmac.com

NORTH CAROLINA PROFESSIONAL SEAL 043301 ENGINEER JOHNATHAN T. WILLIAMS
CF88340
27-Jun-2025

STATE OF NORTH CAROLINA
DEPARTMENT OF TRANSPORTATION
RALEIGH

CONCRETE SLOPE PROTECTION

REVISIONS								SHEET NO.
NO.	BY:	DATE:	NO.	BY:	DATE:			S01-46
1			3					TOTAL SHEETS
2			4					48

DOCUMENT NOT CONSIDERED
FINAL UNLESS ALL
SIGNATURES COMPLETED

DRAWN BY :	N. K. KAVANI	DATE :	7-2023
CHECKED BY :	J. T. WILLIAMS	DATE :	3-2024
DESIGN ENGINEER OF RECORD:	J. T. WILLIAMS	DATE :	3-2024

12/15/2024 4:43:01 PM
REVISED: C:\Users\BRC.01.780140\Plans\401_091_B5716_SMU_SP_S01-46_780140.dgn
KAVI06794

Docusign Envelope ID: 94478B89-8910-4784-B75E-FFD00CC24A0F

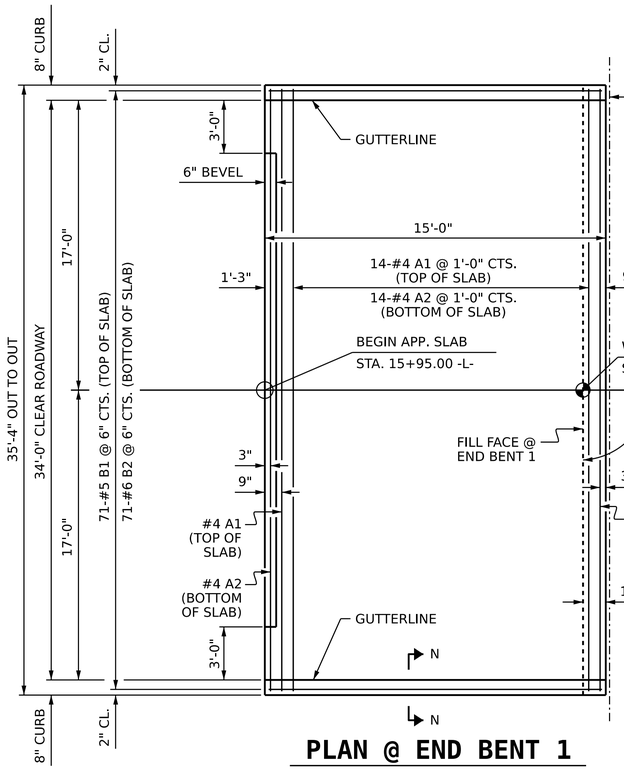

PLAN @ END BENT 1

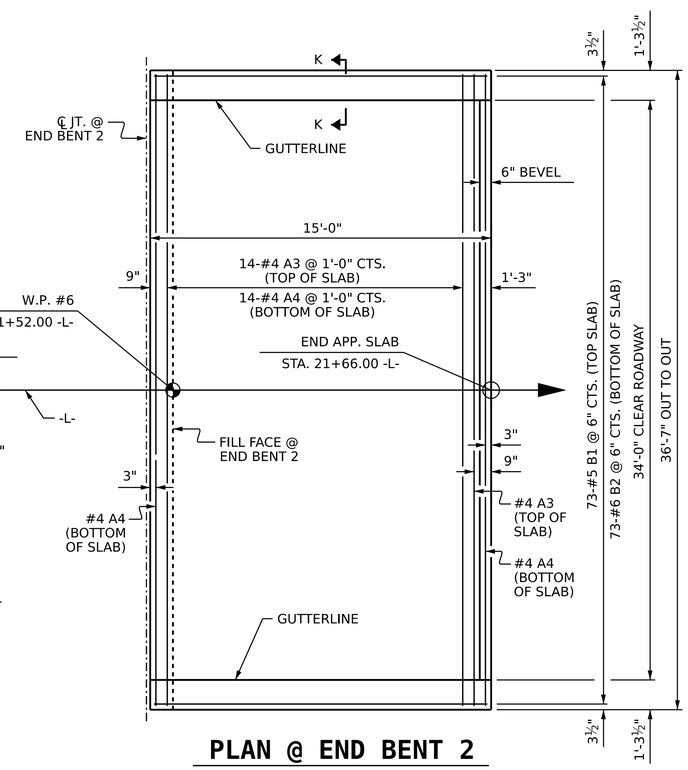

PLAN @ END BENT 2

NOTES:

FOR BRIDGE APPROACH FILL, SEE ROADWAY PLANS.

APPROACH SLAB SHALL NOT BE CONSTRUCTED PRIOR TO COMPLETION OF THE BRIDGE DECK.

THE JOINT SHALL BE SAWED PRIOR TO THE CASTING OF THE CONCRETE PARAPET.

AREA BETWEEN THE WINGWALL AND APPROACH SLAB SHALL BE GRADED TO DRAIN THE WATER AWAY FROM THE FILL FACE OF THE BRIDGE AND SHALL BE PAVED. SEE ROADWAY PLANS.

THE COST OF THE CONCRETE PARAPET AND TWO BAR METAL RAIL ON THE APPROACH SLAB AT END BENT 2 SHALL BE INCLUDED IN THE LINEAR FOOT CONTRACT PRICE BID FOR "1'-2" X 2'-6" CONCRETE PARAPET" AND "TWO BAR METAL RAIL", RESPECTIVELY.

FOR CONCRETE PARAPET, SEE "PLAN OF CONCRETE PARAPETS" AND "PARAPET DETAILS" SHEETS.

FOR TWO BAR METAL RAIL DETAILS, SEE "RAIL POST SPACINGS AND END OF RAIL DETAILS" AND "2 BAR METAL RAIL" SHEETS.

WITH FOAM JOINT SEAL

FOR FOAM JOINT SEALS, SEE SPECIAL PROVISIONS.

THE NOMINAL UNCOMPRESSED SEAL WIDTH OF THE FOAM JOINT SEAL SHALL BE 4¼" FOR END BENT 1 AND 2½" FOR END BENT 2.

FOR ELASTOMERIC CONCRETE, SEE SPECIAL PROVISIONS.

BILL OF MATERIAL

APPROACH SLAB AT END BENT 1

BAR	NO.	SIZE	TYPE	LENGTH	WEIGHT
* A1	15	#4	STR	35'-0"	351
A2	16	#4	STR	35'-0"	374
* B1	71	#5	STR	13'-10"	1024
B2	71	#6	STR	14'-8"	1564
REINFORCING STEEL = 1,938 LBS					
* EPOXY COATED REINFORCING STEEL = 1,375 LBS					
CLASS AA CONCRETE = 23.0 C.Y.					

APPROACH SLAB AT END BENT 2

BAR	NO.	SIZE	TYPE	LENGTH	WEIGHT
* A3	15	#4	STR	36'-3"	363
A4	16	#4	STR	36'-3"	387
* B1	73	#5	STR	13'-10"	1053
B2	73	#6	STR	14'-8"	1608
REINFORCING STEEL = 1,995 LBS					
* EPOXY COATED REINFORCING STEEL ** = 1,416 LBS					
CLASS AA CONCRETE = 23.8 C.Y.					

** QUANTITIES FOR BARRIER RAIL ARE NOT INCLUDED. SEE PARAPET DETAILS SHEET.

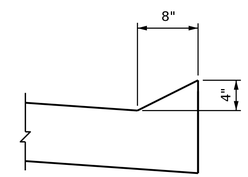

SECTION N-N

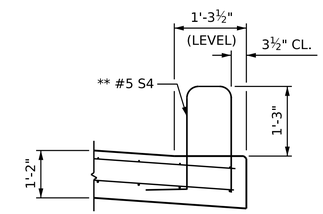

SECTION K-K

SPLICE LENGTHS

BAR SIZE	EPOXY COATED	UNCOATED
#4	1'-11"	1'-7"
#5	2'-5"	2'-0"
#6	3'-7"	2'-5"

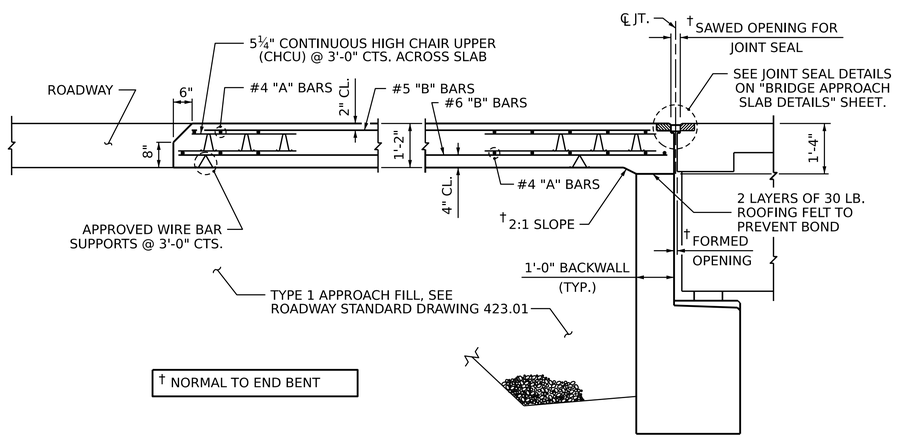

† NORMAL TO END BENT

SECTION THRU SLAB (END BENT 1)

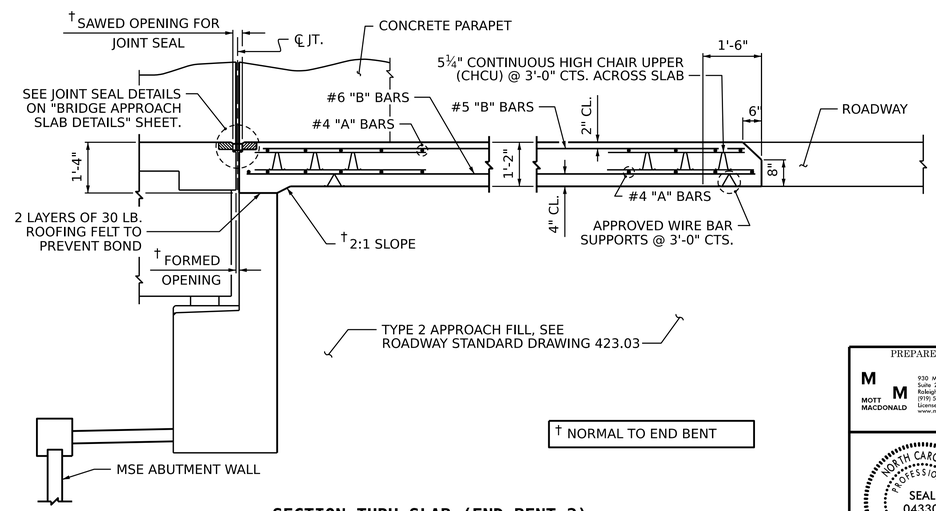

† NORMAL TO END BENT

SECTION THRU SLAB (END BENT 2)

PROJECT NO. B-5716

ROCKINGHAM COUNTY

STATION: 18+80.50 -L-

SHEET 1 OF 2

PREPARED BY

MOTT MACDONALD
930 Main Campus Drive, Suite 200
Raleigh, NC 27606
(919) 553-2253
License No. F-0669
www.mottmac.com

NORTH CAROLINA PROFESSIONAL SEAL 043301 ENGINEER JONATHAN T. WILLIAMS
27-Jun-2024

STATE OF NORTH CAROLINA
DEPARTMENT OF TRANSPORTATION
RALEIGH

BRIDGE APPROACH SLAB FOR FLEXIBLE PAVEMENT

DOCUMENT NOT CONSIDERED FINAL UNLESS ALL SIGNATURES COMPLETED

REVISIONS								SHEET NO.
NO.	BY:	DATE:	NO.	BY:	DATE:			S01-47
1			3					TOTAL SHEETS
2			4					48

DRAWN BY :	N. K. KAVANI	DATE :	8-2023
CHECKED BY :	J. T. WILLIAMS	DATE :	3-2024
DESIGN ENGINEER OF RECORD:	J. T. WILLIAMS	DATE :	3-2024

12/16/2024 4:43:02 PM
R:\Structures\Bridge_01_780140\Plans\401_093_B5716_SMU_AS_S01-47_780140.dgn
KAV106794

Docusign Envelope ID: 94478B89-8910-4784-B75E-FFD00CC24A0F

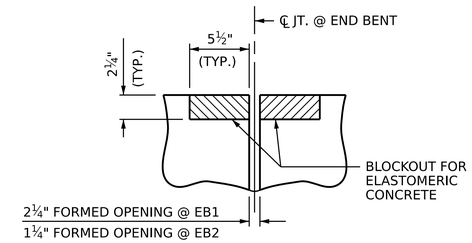

SECTION C-C

FOAM JOINT SEAL
(PRE-SAWED ELASTOMERIC
CONCRETE DIMENSIONS)

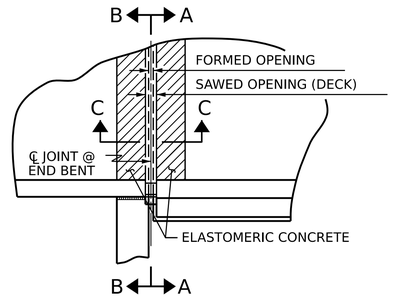

PLAN @ END BENT 1

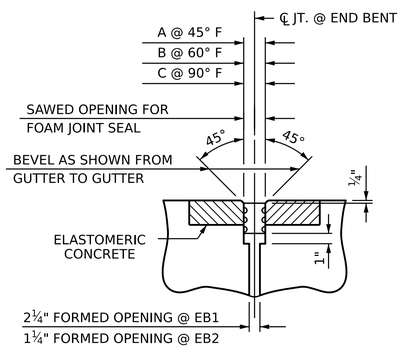

SECTION C-C

FOAM JOINT SEAL
(EXPANSION)

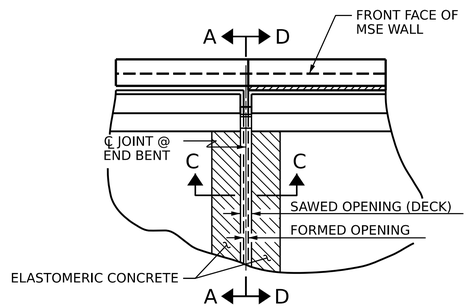

PLAN @ END BENT 2

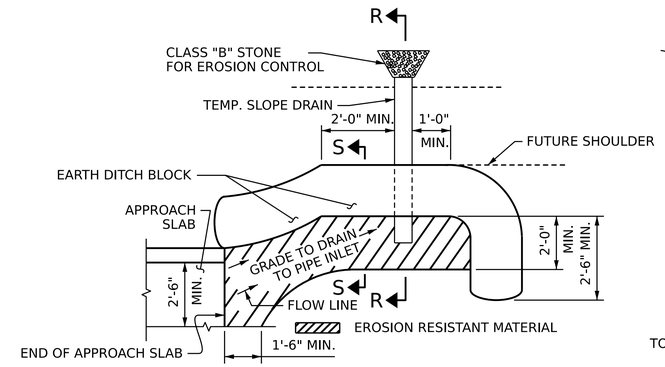

NOTE: IMMEDIATELY AFTER THE CONSTRUCTION OF THE APPROACH SLAB, THE CONTRACTOR SHALL PROVIDE TEMPORARY BERM AND SLOPE DRAIN. CONTRACTOR SHALL GRADE TO PIPE INLET AND PROVIDE EROSION RESISTANT MATERIAL AS SHOWN. THE EROSION RESISTANT MATERIAL SHALL BE EITHER 1) ASPHALT PLANT MIX, TYPE 1 OR TYPE 2, MIN. 2" DEPTH, 2) EROSION CONTROL MAT, OR 3) CONCRETE, AS DIRECTED BY THE ENGINEER. THE SLOPE DRAIN SHALL CONSIST OF A NON-PERFORATED TEMPORARY DRAINAGE PIPE, 12 INCHES IN DIAMETER.

PLAN VIEW

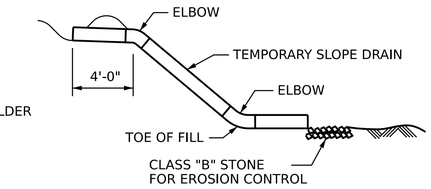

SECTION R-R

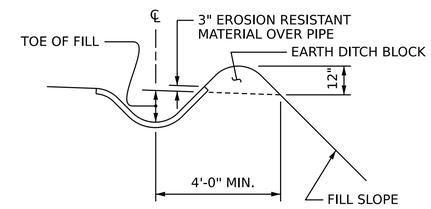

SECTION S-S

TEMPORARY BERM AND SLOPE DRAIN DETAILS

(TO BE USED WHEN SHOULDER BERM GUTTER IS REQUIRED)

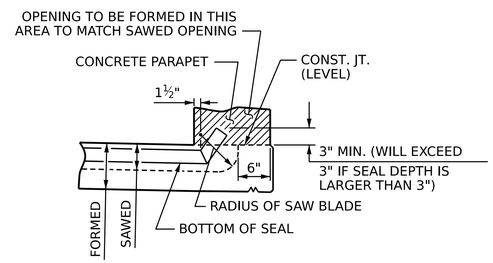

SECTION A-A

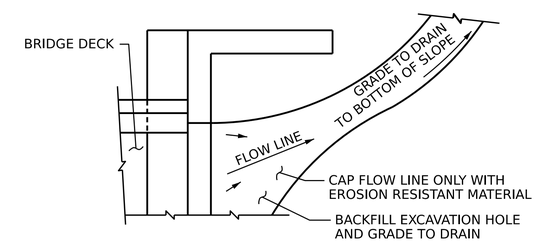

NOTE: IF THE APPROACH SLAB IS NOT CONSTRUCTED IMMEDIATELY AFTER THE BACKFILLING OF THE END BENT EXCAVATION, GRADE TO DRAIN TO THE BOTTOM OF THE SLOPE AND PROVIDE EROSION RESISTANT MATERIAL, SUCH AS FIBERGLASS ROVING OR AS DIRECTED BY THE ENGINEER TO PREVENT SOIL EROSION AND TO PROTECT THE AREA ADJACENT TO THE STRUCTURE. THE CONTRACTOR WILL BE REQUIRED TO REMOVE THESE MATERIALS PRIOR TO CONSTRUCTION OF THE APPROACH SLAB.

TEMPORARY DRAINAGE DETAIL

OPENING WIDTH		
	END BENT NO. 1	END BENT NO. 2
A	$3\frac{13}{16}$"	$2\frac{1}{8}$"
B	$3\frac{7}{16}$"	$1\frac{15}{16}$"
C	$2\frac{11}{16}$"	$1\frac{1}{2}$"

ELASTOMERIC CONCRETE	
END BENT NO.	ELASTOMERIC CONCRETE * (CU. FT.)
1	5.8
2	5.8
TOTAL	11.6

* BASED ON THE MINIMUM BLOCKOUT SHOWN.

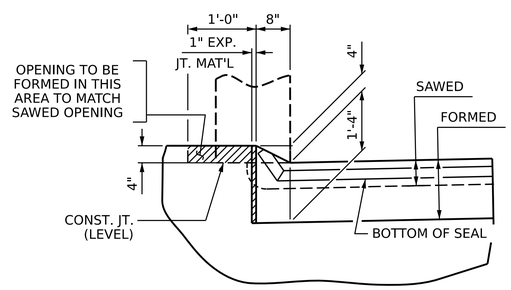

SECTION B-B

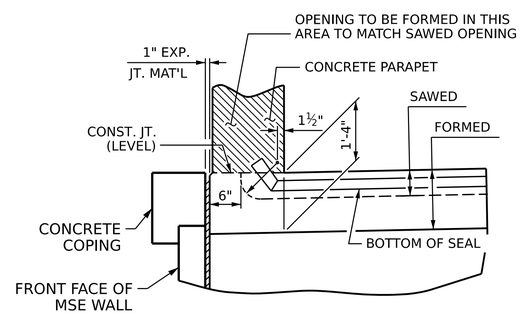

SECTION D-D

JOINT SEAL DETAILS @ END BENT

FOAM JOINT SEAL TO BE CUT, HEAT WELDED AND TURNED UP PARALLEL TO SLOPE FACE OF THE BARRIER RAIL.

THE JOINT SHALL BE SAWED PRIOR TO THE CASTING OF THE CONCRETE PARAPET.

PROJECT NO. B-5716

ROCKINGHAM COUNTY

STATION: 18+80.50 -L-

SHEET 2 OF 2

PREPARED BY

MOTT MACDONALD

930 Main Campus Drive, Suite 200
Raleigh, NC 27606
(919) 552-2253
License No. F-0669
www.mottmac.com

NORTH CAROLINA PROFESSIONAL SEAL 043301 ENGINEER JOHN T. WILLIAMS

DocuSigned by:
27-Jun-2025

STATE OF NORTH CAROLINA
DEPARTMENT OF TRANSPORTATION
RALEIGH

BRIDGE APPROACH SLAB DETAILS

REVISIONS						SHEET NO.
NO.	BY:	DATE:	NO.	BY:	DATE:	S01-48
1			3			TOTAL SHEETS
2			4			48

DOCUMENT NOT CONSIDERED FINAL UNLESS ALL SIGNATURES COMPLETED

DRAWN BY :	N. K. KAVANI	DATE :	8-2023
CHECKED BY :	J. T. WILLIAMS	DATE :	3-2024
DESIGN ENGINEER OF RECORD:	J. T. WILLIAMS	DATE :	3-2024

12/16/2024 4:43:04 PM
R:\Structures\B5716_SMU_A5_S01-48_780140.dgn
KAVI06734

STANDARD NOTES

DESIGN DATA:

SPECIFICATIONS	AASHTO (CURRENT)
LIVE LOAD	SEE PLANS
IMPACT ALLOWANCE	SEE AASHTO
STRESS IN EXTREME FIBER OF STRUCTURAL STEEL - AASHTO M270 GRADE 36	20,000 LBS. PER SQ. IN.
- AASHTO M270 GRADE 50W	27,000 LBS. PER SQ. IN.
- AASHTO M270 GRADE 50	27,000 LBS. PER SQ. IN.
REINFORCING STEEL IN TENSION - GRADE 60	24,000 LBS. PER SQ. IN.
CONCRETE IN COMPRESSION	1,200 LBS. PER SQ. IN.
CONCRETE IN SHEAR	SEE AASHTO
STRUCTURAL TIMBER - TREATED OR UNTREATED EXTREME FIBER STRESS	1,800 LBS. PER SQ. IN.
COMPRESSION PERPENDICULAR TO GRAIN OF TIMBER	375 LBS. PER SQ. IN.
EQUIVALENT FLUID PRESSURE OF EARTH	30 LBS. PER CU. FT. (MINIMUM)

MATERIAL AND WORKMANSHIP:

EXCEPT AS MAY OTHERWISE BE SPECIFIED ON PLANS OR IN THE SPECIAL PROVISIONS, ALL MATERIAL AND WORKMANSHIP SHALL BE IN ACCORDANCE WITH THE 2024 "STANDARD SPECIFICATIONS FOR ROADS AND STRUCTURES" OF THE N. C. DEPARTMENT OF TRANSPORTATION.

STEEL SHEET PILING FOR PERMANENT OR TEMPORARY APPLICATIONS SHALL BE HOT ROLLED.

CONCRETE:

UNLESS OTHERWISE REQUIRED ON PLANS, CLASS A CONCRETE SHALL BE USED FOR ALL PORTIONS OF ALL STRUCTURES WITH THE EXCEPTION THAT: CLASS AA CONCRETE SHALL BE USED IN BRIDGE SUPERSTRUCTURES, ABUTMENT BACKWALLS, AND APPROACH SLABS; AND CLASS B CONCRETE SHALL BE USED FOR SLOPE PROTECTION AND RIP RAP.

CONCRETE CHAMFERS:

UNLESS OTHERWISE NOTED ON THE PLANS, ALL EXPOSED CORNERS ON STRUCTURES SHALL BE CHAMFERED ¾" WITH THE FOLLOWING EXCEPTIONS: TOP CORNERS OF CURBS MAY BE ROUNDED TO 1½" RADIUS WHICH IS BUILT INTO CURB FORMS; CORNERS OF TRANSVERSE FLOOR EXPANSION JOINTS SHALL BE ROUNDED WITH A ¼" FINISHING TOOL UNLESS OTHERWISE REQUIRED ON PLANS; AND CORNERS OF EXPANSION JOINTS IN THE ROADWAY FACES AND TOPS OF CURBS AND SIDEWALKS SHALL BE ROUNDED TO A ¼" RADIUS WITH A FINISHING STONE OR TOOL UNLESS OTHERWISE REQUIRED ON PLANS.

DOWELS:

DOWELS WHEN INDICATED ON PLANS AS FOR CULVERT EXTENSIONS, SHALL BE EMBEDDED AT LEAST 12" INTO THE OLD CONCRETE AND GROUTED INTO PLACE WITH 1:2 CEMENT MORTAR.

ALLOWANCE FOR DEAD LOAD DEFLECTION, SETTLEMENT, ETC. IN CASTING SUPERSTRUCTURES:

BRIDGES SHALL BE BUILT ON THE GRADE OR VERTICAL CURVE SHOWN ON PLANS. SLABS, CURBS AND PARAPETS SHALL CONFORM TO THE GRADE OR CURVE.

ALL DIMENSIONS WHICH ARE GIVEN IN SECTION AND ARE AFFECTED BY DEAD LOAD DEFLECTIONS ARE DIMENSIONS AT CENTER LINE OF BEARING UNLESS OTHERWISE NOTED ON PLANS. IN SETTING FORMS FOR STEEL BEAM BRIDGES AND PRESTRESSED CONCRETE GIRDER BRIDGES, ADJUSTMENTS SHALL BE MADE DUE TO THE DEAD LOAD DEFLECTIONS FOR THE ELEVATIONS SHOWN. WHERE BLOCKS ARE SHOWN OVER BEAMS FOR BUILDING UP TO THE SLAB, THE VERTICAL DIMENSIONS OF THE BLOCKS SHALL BE ADJUSTED BETWEEN BEARINGS TO COMPENSATE FOR DEAD LOAD DEFLECTIONS, VERTICAL CURVE ORDINATE, AND ACTUAL BEAM CAMBER. WHERE BOTTOM OF SLAB IS IN LINE WITH BOTTOM OF TOP FLANGES, DEPTH OF SLAB BETWEEN BEARINGS SHALL BE ADJUSTED TO COMPENSATE FOR DEAD LOAD DEFLECTION, VERTICAL CURVE ORDINATE, AND ACTUAL BEAM CAMBER.

IN SETTING FALSEWORK AND FORMS FOR REINFORCED CONCRETE SPANS, AN ALLOWANCE SHALL BE MADE FOR DEAD LOAD DEFLECTIONS, SETTLEMENT OF FALSEWORK, AND PERMANENT CAMBER WHICH SHALL BE PROVIDED FOR IN ADDITION TO THE ELEVATIONS SHOWN. AFTER REMOVAL OF THE FALSEWORK, THE FINISHED STRUCTURES SHALL CONFORM TO THE PROFILE AND ELEVATIONS SHOWN ON THE PLANS AND CONSTRUCTION ELEVATIONS FURNISHED BY THE ENGINEER.

DETAILED DRAWINGS FOR FALSEWORK OR FORMS FOR BRIDGE SUPERSTRUCTURE AND ANY STRUCTURE OR PARTS OF A STRUCTURE AS NOTED ON THE PLANS SHALL BE SUBMITTED TO THE ENGINEER FOR APPROVAL BEFORE CONSTRUCTION OF THE FALSEWORK OR FORMS IS STARTED.

REINFORCING STEEL:

ALL REINFORCING STEEL SHALL BE DEFORMED. DIMENSIONS RELATIVE TO PLACEMENT OF REINFORCING ARE TO CENTERS OF BARS UNLESS OTHERWISE INDICATED IN THE PLANS. DIMENSIONS ON BAR DETAILS ARE TO CENTERS OF BARS OR ARE OUT TO OUT AS INDICATED ON PLANS.

WIRE BAR SUPPORTS SHALL BE PROVIDED FOR REINFORCING STEEL WHERE INDICATED ON THE PLANS. WHEN BAR SUPPORT PIECES ARE PLACED IN CONTINUOUS LINES, THEY SHALL BE SO PLACED THAT THE ENDS OF THE SUPPORTING WIRES SHALL BE LAPPED TO LOCK LEGS ON ADJOINING PIECES.

STRUCTURAL STEEL:

AT THE CONTRACTOR'S OPTION, HE MAY SUBSTITUTE ⅞" ∅ SHEAR STUDS FOR THE ¾" ∅ STUDS SPECIFIED ON THE PLANS. THIS SUBSTITUTION SHALL BE MADE AT THE RATE OF 3 - ⅞" ∅ STUDS FOR 4 - ¾" ∅ STUDS, AND STUD SPACING CHANGES SHALL BE MADE AS NECESSARY TO PROVIDE THE SAME EQUIVALENT NUMBER OF ⅞" ∅ STUDS ALONG THE BEAM AS SHOWN FOR ¾" ∅ STUDS BASED ON THE RATIO OF 3 - ⅞"∅ STUDS FOR 4 - ¾" ∅ STUDS. STUDS OF THE LENGTH SPECIFIED ON THE PLANS MUST BE PROVIDED. THE MAXIMUM SPACING SHALL BE 2'-0".

EXCEPT AT THE INTERIOR SUPPORTS OF CONTINUOUS BEAMS WHERE THE COVER PLATE IS IN CONTACT WITH BEARING PLATE, THE CONTRACTOR MAY, AT HIS OPTION, SUBSTITUTE FOR THE COVER PLATES DESIGNATED ON THE PLANS COVER PLATES OF THE EQUIVALENT AREA PROVIDED THESE PLATES ARE AT LEAST 5/16" IN THICKNESS AND DO NOT EXCEED A WIDTH EQUAL TO THE FLANGE WIDTH LESS 2" OR A THICKNESS EQUAL TO 2 TIMES THE FLANGE THICKNESS. THE SIZE OF FILLET WELDS SHALL CONFORM TO THE REQUIREMENTS OF THE CURRENT ANSI/AASHTO/AWS "BRIDGE WELDING CODE". ELECTROSLAG WELDING WILL NOT BE PERMITTED.

WITH THE SOLE EXCEPTION OF EDGES AT SURFACES WHICH BEAR ON OTHER SURFACES, ALL SHARP EDGES AND ENDS OF SHAPES AND PLATES SHALL BE SLIGHTLY ROUNDED BY SUITABLE MEANS TO A RADIUS OF APPROXIMATELY 1/16" OR EQUIVALENT FLAT SURFACE AT A SUITABLE ANGLE PRIOR TO PAINTING, GALVANIZING, OR METALLIZING.

HANDRAILS AND POSTS:

METAL STANDARDS AND FACES OF THE CONCRETE END POSTS FOR THE METAL RAIL SHALL BE SET NORMAL TO THE GRADE OF THE CURB, UNLESS OTHERWISE SHOWN ON PLANS. THE METAL RAIL AND TOPS OF CONCRETE POSTS USED WITH THE ALUMINUM RAIL SHALL BE BUILT PARALLEL TO THE GRADE OF THE CURB.

METAL HANDRAILS SHALL BE IN ACCORDANCE WITH THE PLANS. RAILS SHALL BE AS MANUFACTURED FOR BRIDGE RAILING. CASTINGS SHALL BE OF A UNIFORM APPEARANCE. FINS AND OTHER DEFORMATIONS RESULTING FROM CASTING OR OTHERWISE SHALL BE REMOVED IN A MANNER SO THAT A UNIFORM COLORING OF THE COMPLETED CASTING SHALL BE OBTAINED. CASTINGS WITH DISCOLORATIONS OR OF NON-UNIFORM COLORING WILL NOT BE ACCEPTED. CERTIFIED MILL REPORTS ARE REQUIRED FOR METAL RAILS AND POSTS.

SPECIAL NOTES:

GENERALLY, IN CASE OF DISCREPANCY, THIS STANDARD SHEET OF NOTES SHALL GOVERN OVER THE SPECIFICATIONS, BUT THE REMAINDER OF THE PLANS SHALL GOVERN OVER NOTES HEREON, AND SPECIAL PROVISIONS SHALL GOVERN OVER ALL. SEE SPECIFICATIONS ARTICLE 105-4.