TIP PROJECT: BR-0090

CONTRACT: C204832

STATE	STATE PROJECT REFERENCE NO.	SHEET NO.	TOTAL SHEETS
N.C.	BR-0090	1	

STATE PROJ. NO.	F.A. PROJ. NO.	DESCRIPTION
67090.1.1	NA	P.E.
67090.2.1	NA	R/W & UTIL
67090.3.1	NA	CONST.

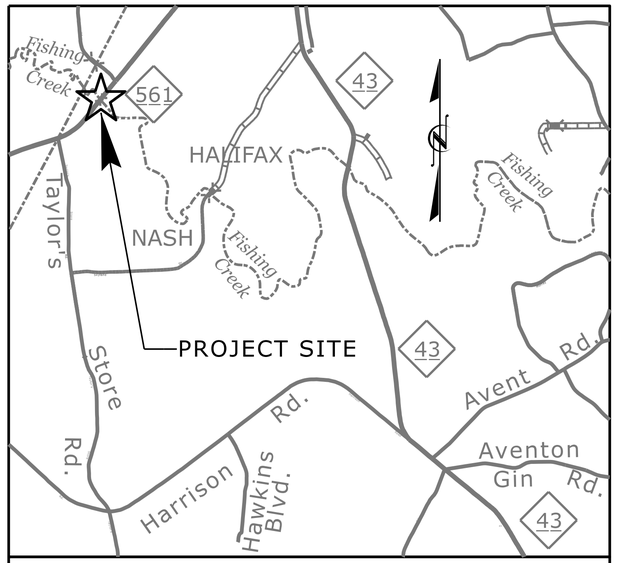

VICINITY MAP N.T.S.

STATE OF NORTH CAROLINA
DIVISION OF HIGHWAYS
NASH COUNTY

LOCATION: BRIDGE NO. 630036 OVER FISHING CREEK ON NC HWY 561 (CAPPS RD)

TYPE OF WORK: GRADING, DRAINAGE, PAVING, AND STRUCTURES

NAD 83/2011

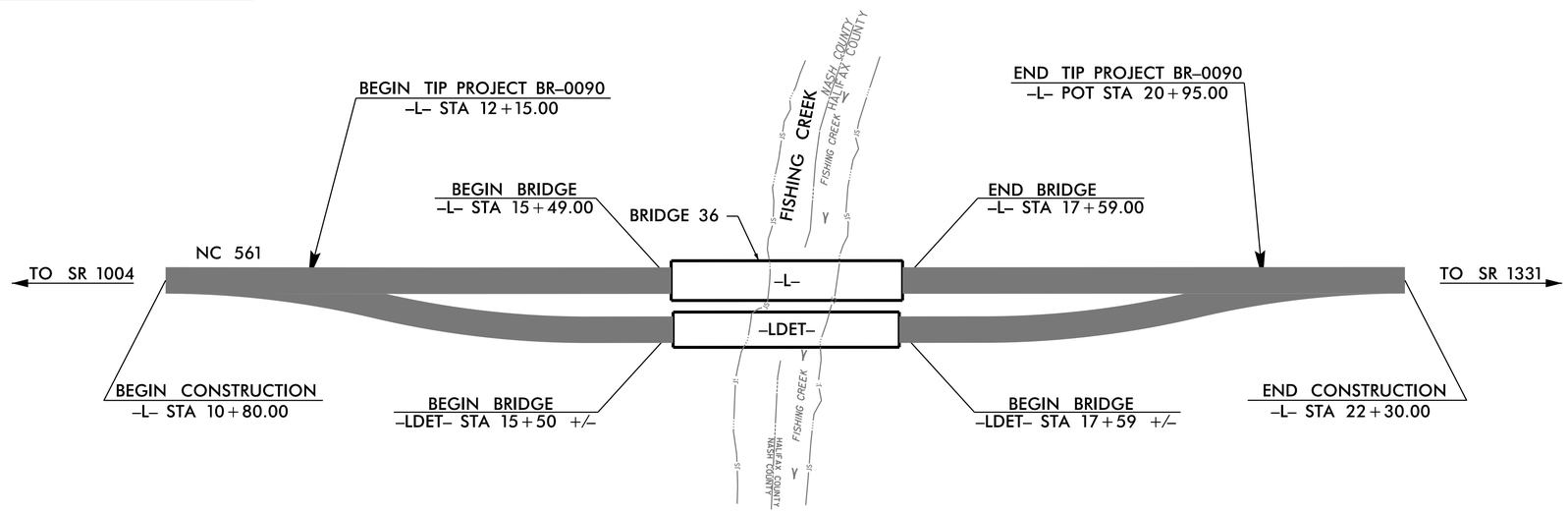

STRUCTURE

STATE OF NORTH CAROLINA DEPARTMENT OF TRANSPORTATION

DESIGN DATA

ADT (2025) = 1,580
ADT (2045) = 1,800

D = 5 %
T = 15 % *
V = 60 MPH
* (TTST 10%, DUAL 5%)

FUNC CLASS = MINOR ARTERIAL
REGIONAL TIER

PROJECT LENGTH

LENGTH ROADWAY TIP PROJECT BR-0090 = 0.127 MILES
LENGTH STRUCTURE TIP PROJECT BR-0090 = 0.040 MILES

TOTAL LENGTH TIP PROJECT BR-0090 = 0.167 MILES

Prepared In the Office of:
DIVISION OF HIGHWAYS
STRUCTURES MANAGEMENT UNIT
1000 BIRCH RIDGE DR.
RALEIGH, N.C. 27610

2024 STANDARD SPECIFICATIONS

LETTING DATE :

AUGUST 19, 2025

KRISTY W. ALFORD, P.E., CPM
PROJECT ENGINEER

ASTER G. ABRAHA, P.E.
PROJECT DESIGN ENGINEER

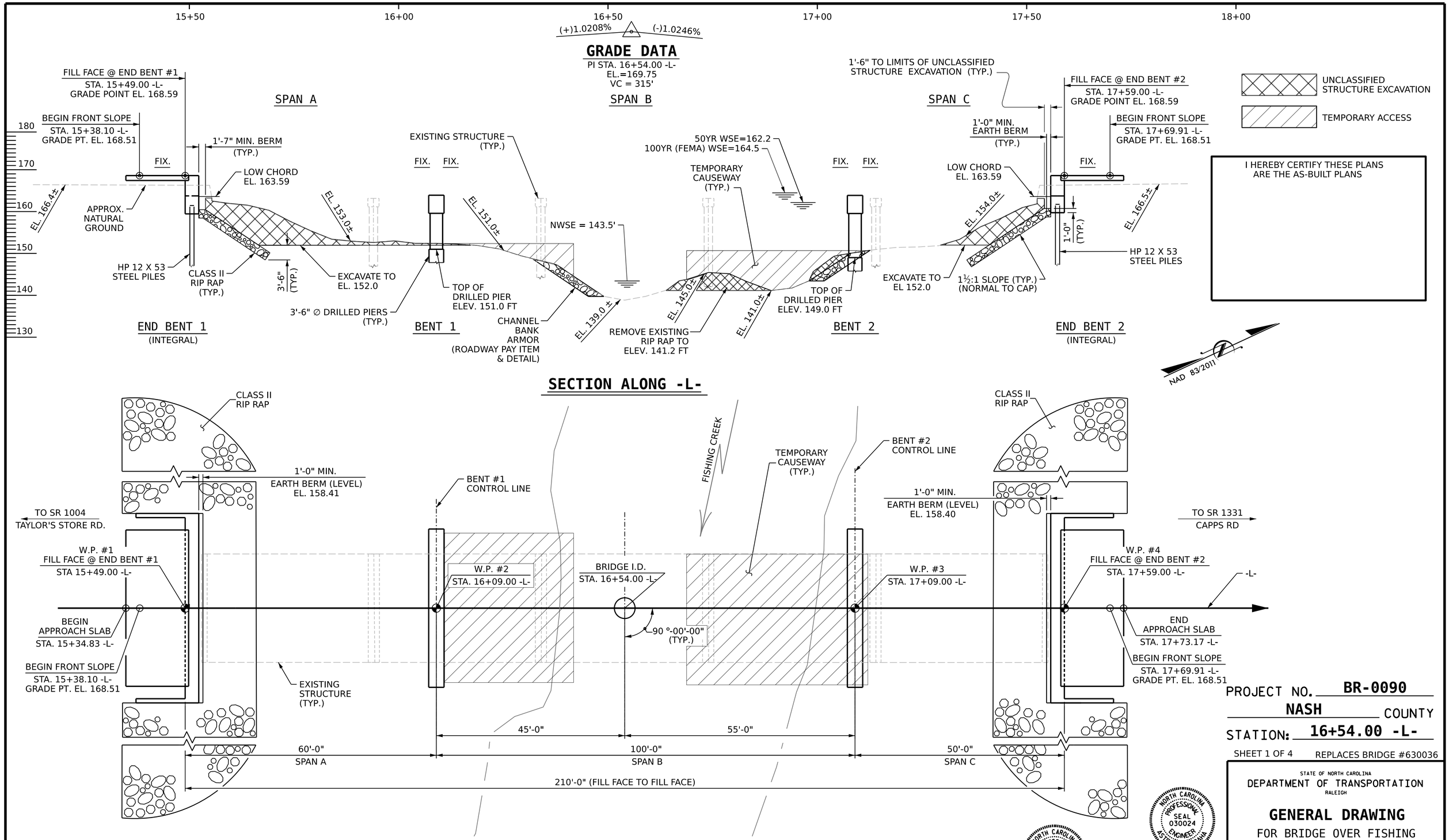

PROJECT NO. BR-0090

NASH COUNTY

STATION: 16+54.00 -L-

SHEET 1 OF 4 REPLACES BRIDGE #630036

STATE OF NORTH CAROLINA
DEPARTMENT OF TRANSPORTATION
RALEIGH

GENERAL DRAWING

FOR BRIDGE OVER FISHING CREEK ON NC HWY 561 BETWEEN SR 1004 & SR 1331

NORTH CAROLINA PROFESSIONAL SEAL 030024 ENGINEER ASTER G. ABRAHA
Aster Abraha
DDA094AED510AFD...
06/26/2025

NORTH CAROLINA PROFESSIONAL SEAL 29441 ENGINEER KRISTY W. ALFORD
F245838930BF40E...
06/27/2025

REVISIONS						SHEET NO.
NO.	BY:	DATE:	NO.	BY:	DATE:	S-01
1			3			TOTAL SHEETS
2			4			35

DOCUMENT NOT CONSIDERED FINAL UNLESS ALL SIGNATURES COMPLETED

DRAWN BY :	J. BALDWIN	DATE :	12/2022
CHECKED BY :	S. WANCE / M. M. AHMED	DATE :	05/2024
DESIGN ENGINEER OF RECORD:	M. M. AHMED	DATE :	05/2025

6/24/2025
R:\Structures\Plans\401_001_BR0090_SMU_GDI_S-01_630036.dgn
aabraha

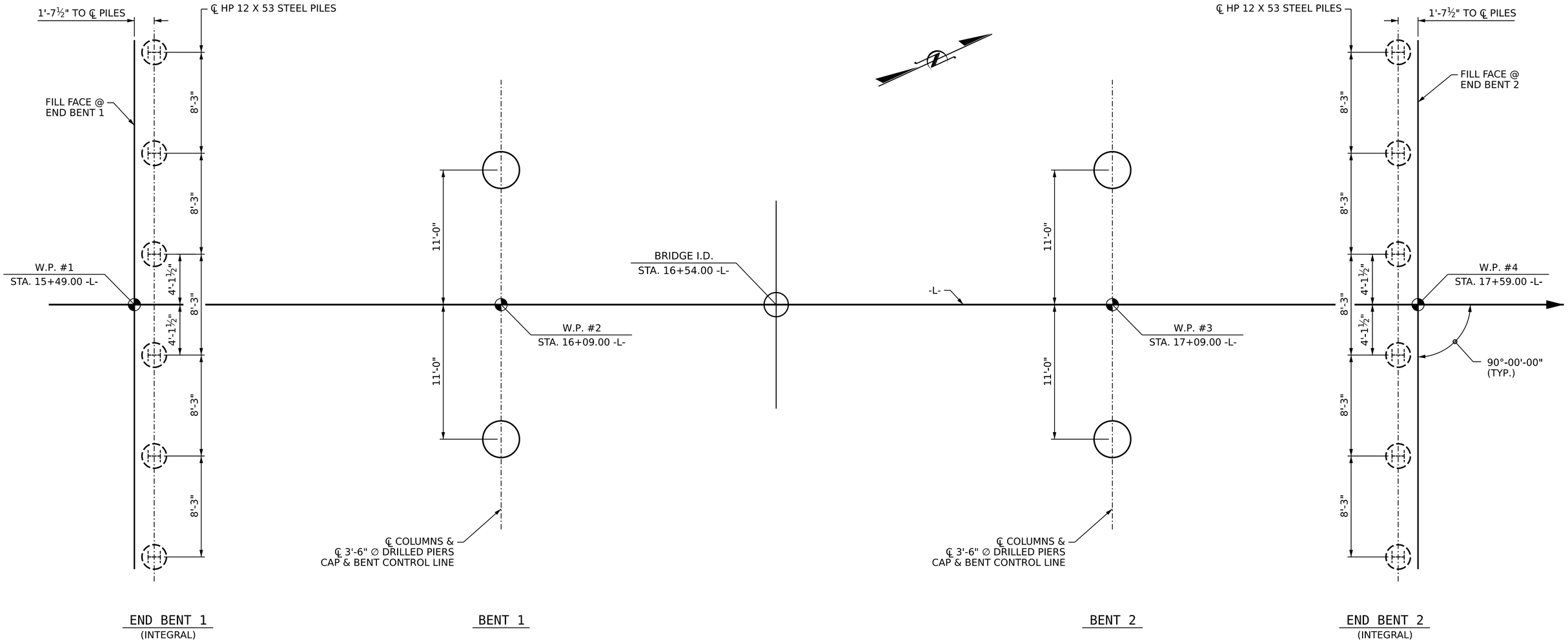

FOUNDATION LAYOUT

DIMENSIONS LOCATING PILES AND DRILLED PIERS ARE SHOWN TO THE CENTERLINE OF PILES AND DRILLED PIERS

NOTES

FOR PILES, SEE SECTION 450 OF THE STANDARD SPECIFICATIONS.

IT HAS BEEN ESTIMATED THAT A HAMMER WITH AN EQUIVALENT RATED ENERGY IN THE RANGE OF 40,000 TO 60,000 FT-LBS PER BLOW WILL BE REQUIRED TO DRIVE PILES AT END BENT NO. 1 AND END BENT NO. 2 THIS ESTIMATED ENERGY RANGE DOES NOT RELEASE THE CONTRACTOR FROM PROVIDING DRIVING EQUIPMENT IN ACCORDANCE WITH SUB-ARTICLE 450-3(D)(2) OF THE STANDARD SPECIFICATIONS.

FOR DRILLED PIERS, SEE SECTION 411 OF THE STANDARD SPECIFICATIONS.

DO NOT DEWATER DRILLED PIER EXCAVATIONS AT BENT NO. 1 AND BENT NO. 2. CLEAN THE BOTTOM OF EXCAVATIONS WITH A SUBMERSIBLE PUMP OR AN AIRLIFT. WET PLACEMENT OF CONCRETE IS REQUIRED.

INSTALL PERMANENT CASINGS AT BENT NO. 1 AND BENT NO. 2 BY VIBRATING, SCREWING OR DRIVING PERMANENT CASINGS BEFORE EXCAVATING OR DISTURBING ANY MATERIAL BELOW ELEVATION 144.8 FT AND 141.2 FT, RESPECTIVELY

PROJECT NO. BR-0090

NASH COUNTY

STATION: 16+54.00 -L-

SHEET 2 OF 4

NORTH CAROLINA PROFESSIONAL SEAL 030024 ENGINEER ASTER G. ABRAHA

Aster Abraha

DDA094AED510 4FD...

06/26/2023

STATE OF NORTH CAROLINA
DEPARTMENT OF TRANSPORTATION
RALEIGH

GENERAL DRAWING

FOR BRIDGE OVER FISHING CREEK ON HWY 561 BETWEEN SR 1004 & SR 1331

REVISIONS						SHEET NO.
NO.	BY:	DATE:	NO.	BY:	DATE:	S-02
1			3			TOTAL SHEETS
2			4			35

DOCUMENT NOT CONSIDERED FINAL UNLESS ALL SIGNATURES COMPLETED

DRAWN BY :	J. BALDWIN	DATE :	01/2023
CHECKED BY :	S. WANCE / S. LOTFI	DATE :	05/2024
DESIGN ENGINEER OF RECORD:	M. AHMED	DATE :	03/2025

6/24/2025
R:\Structures\Plans\401_003_BR0090_SMU_GD2_S-02_600036.dgn
aabraha

SUMMARY OF PILE INFORMATION/INSTALLATION

(Blank entries indicate item is not applicable to structure)

End Bent / Bent No, Pile(s) #(-#) (e.g., "Bent 1, Piles 1-5")	Number of Piles per Line	Factored Resistance per Pile KIPS	Pile Cut-Off (Top of Pile) Elevation FT	Estimated Pile Length per Pile FT	Scour Critical Elevation FT	Driven Piles			Predrilling for Piles **			Drilled-In Piles		
						Minimum Pile Tip (Tip No Higher Than) Elevation FT	Required Driving Resistance (RDR)* per pile KIPS	Pile Redrives Quantity EACH	Predrilling Length per Pile LIN FT	Predrilling Elevation (Elevation Not To Predrill Below) FT	Maximum Predrilling Diameter INCHES	Pile Excavation (Bottom of Hole) Elevation FT	Pile Excavation Not In Soil per Pile LIN FT	Pile Excavation In Soil per Pile LIN FT
End Bent 1, Piles 1 & 2	2	230	161.41	40			390							
End Bent 1, Piles 3 & 4	2	230	161.41	45			390							
End Bent 1, Piles 5 & 6	2	230	161.41	50			390							
End Bent 2, Piles 1-6	6	200	161.40	45			340							
TOTAL QUANTITY:														

$$^{*}RDR = \frac{Factored\ Resistance + Factored\ Drag\ Load + Factored\ Dead\ Load}{Dynamic\ Resistance\ Factor} + Nominal\ Drag\ Load\ Resistance + Nominal\ Resistance\ from\ Scourable\ Material$$

** Predrilling for Piles is required for end bents/bents with a predrilling length and at the Contractor's option for end bents/bents with predrilling information but no predrilling length.

PILE DESIGN INFORMATION

(Blank entries indicate item is not applicable to structure)

End Bent / Bent No, Pile(s) #(-#) (e.g., "Bent 1, Piles 1-5")	Factored Axial Load per Pile KIPS	Factored Drag Load per Pile KIPS	Factored Dead Load * per Pile KIPS	Dynamic Resistance Factor	Nominal Drag Resistance per Pile KIPS	Nominal Scour Resistance per Pile KIPS
End Bent 1, Piles 1-6	230			0.6		
End Bent 2, Piles 1-6	196			0.6		

* Factored Dead Load is factored weight of pile above the ground line.

SUMMARY OF DRILLED PIER INFORMATION/INSTALLATION

(Blank entries indicate item is not applicable to structure)

End Bent / Bent No, Pier(s) #(-#) (e.g., "Bent 1, Piers 1-3")	Number of Piers per Line	Factored Resistance per Pier KIPS	Required Drilled Pier Tip Elevation FT	Required Tip Resistance per Pier KSF	Scour Critical Elevation FT	Minimum Drilled Pier Penetration Into Rock per Pier LIN FT	Drilled Pier Length* per Pier LIN FT	Drilled Pier Length Not In Soil* per Pier LIN FT	Drilled Pier Length In Soil* per Pier LIN FT	Permanent Steel Casing Required? YES	Permanent Steel Casing Tip Elevation (Elevation Not To Extend Casing Below) FT	Permanent Steel Casing Length** per Pier LIN FT
Bent 1, Pier 1	1	1320	108.00	200	142.00			7	36	YES	136.00	15
Bent 1, Pier 2	1	1320	98.00	200	142.00			17	36	YES	136.00	15
Bent 2, Pier 1	1	1265	107.00	200	138.00			11	31	YES	124.00	25
Bent 2, Pier 2	1	1265	113.00	200	138.00			11	25	YES	129.00	20
TOTAL QUANTITY:								46	128			75

* Drilled Pier Length, Drilled Pier Length Not in Soil and Drilled Pier Length in Soil represent estimated drilled pier quantities and are measured and paid for as either "42" Dia. Drilled Piers" or "42" Dia. Drilled Piers Not in Soil" and "42" Dia. Drilled Piers in Soil" in accordance with Article 411-7 of the NCDOT Standard Specifications. For bents with a not in soil pay item, drilled piers through air or water will be paid at the contract unit price for "42" Dia. Drilled Piers in Soil."

** Permanent Steel Casing Length equals the difference between the ground line or top of drilled pier elevation, whichever is higher, and the permanent casing tip elevation and is measured and paid for as "Permanent Steel Casing for 42" Dia. Drilled Pier" in accordance with Article 411-7 of the NCDOT Standard Specifications.

SUMMARY OF DRILLED PIER TESTING

(Blank entries indicate item is not applicable to structure)

End Bent / Bent No, Pier(s) #(-#) (e.g., "Bent 1, Piers 1-3")	Standard Penetration Test (SPT) EACH	Crosshole Sonic Logging (CSL) EACH	Thermal Integrity Profiler (TIP) EACH	Shaft Inspection Device (SID) EACH	Pile Integrity Test (PIT) EACH
Bent 1, Pier 1 -2		1		1	
Bent 2, Pier 1-2		1		1	
TOTAL QUANTITY:		2		2	

PROJECT NO. **BR-0090**

NASH COUNTY

STATION: **16+54.00 -L-**

SHEET 3 OF 4

NOTES:

1. The Pile Foundation Tables are based on the bridge substructure design and foundation recommendations sealed by a North Carolina Professional Engineer (Thein Tun Zan, #030943) on 010-15-2024.
2. Total Pile Driving Equipment Setup quantity (not shown in Pile Foundation Tables) equals the number of driven piles, i.e., the number of piles with a Required Driving Resistance.
3. The Engineer may adjust the quantity for DPT Testing, Pipe Pile Plates, Permanent Steel Casing, SPTs, TIPs, CSL Testing, SID Inspections and PITs when necessary.

NORTH CAROLINA PROFESSIONAL SEAL 030024 ENGINEER ASTER G. ABRAHA

ASTER ABRAHA
7D2CD29A4D2E104FD...
07/02/2025

SIGNATURE DATE

DOCUMENT NOT CONSIDERED FINAL UNLESS ALL SIGNATURES COMPLETED

STATE OF NORTH CAROLINA
DEPARTMENT OF TRANSPORTATION
RALEIGH

PILE AND DRILLED PIER FOUNDATION TABLES

REVISIONS						
NO.	BY:	DATE:	NO.	BY:	DATE:	
1			3			
2			4			

SHEET NO. S-03

TOTAL SHEETS 35

TOTAL BILL OF MATERIAL

	CONSTRUCTION, MAINTENANCE AND REMOVAL OF TEMPORARY STRUCTURE @ STA. 16+53.50 -LDET-	CONSTRUCTION, MAINTENANCE AND REMOVAL OF TEMPORARY ACCESS @ STA. 16+54 -L-	REMOVAL OF EXISTING STRUCTURE @ STA. 16+54 -L-	ASBESTOS ASSESSMENT	3'-6" ∅ DRILLED PIERS IN SOIL	3'-6" ∅ DRILLED PIERS NOT IN SOIL	PERMANENT STEEL CASING 3'-6" ∅ DRILLED PIER	SID INSPECTIONS	CSL TESTING	UNCLASSIFIED STRUCTURE EXCAVATION @ STA. 16+54 -L-	REINFORCED CONCRETE DECK SLAB	GROOVING BRIDGE FLOORS	CLASS A CONCRETE	BRIDGE APPROACH SLABS @ STA. 16+54.00	REINFORCING STEEL	SPIRAL COLUMN REINFORCING STEEL
	LUMP SUM	LUMP SUM	LUMP SUM	LUMP SUM	LIN. FT.	LIN. FT.	LIN. FT.	EACH	EACH	LUMP SUM	SQ. FT.	SQ. FT.	CU. YDS.	LUMP SUM	LBS.	LBS.
SUPERSTRUCTURE											8,177	7,788		LUMP SUM		
END BENT 1													26.6		3,733	
BENT 1					72	24	30	1	1				25.6		14,201	2,413
BENT 2					56	22	45	1	1				26.6		13,234	2,142
END BENT 2													26.6		3,733	
TOTAL	LUMP SUM	LUMP SUM	LUMP SUM	LUMP SUM	128	46	75	2	2	LUMP SUM	8,177	7,788	105.4	LUMP SUM	34,901	4,555

TOTAL BILL OF MATERIAL CONT'D

	FIB 45" PRESTRESSED CONCRETE GIRDERS		PILE DRIVING EQUIPMENT SETUP FOR HP 12 x 53 STEEL PILES	HP 12 x 53 STEEL PILES		CONCRETE BARRIER RAIL	RIP RAP CLASS II (2'-0" THICK)	GEOTEXTILE FOR DRAINAGE	ELASTOMERIC BEARINGS
	NO.	LIN. FT.	EACH	NO.	LIN. FT.	LIN. FT.	TONS	SQ. YDS.	LUMP SUM
SUPERSTRUCTURE	15	1,037.5				416.67			LUMP SUM
END BENT 1			6	6	270		346	384	
BENT 1									
BENT 2									
END BENT 2			6	6	270		336	374	
TOTAL	15	1,037.5	12	12	540	416.67	682	758	LUMP SUM

BENCH MARK: B.M. #1 R/R SPIKE IN BASE OF 18" OAK. 15' RIGHT OF STA. 26+97.00 -L-, ELEV. 161.86'

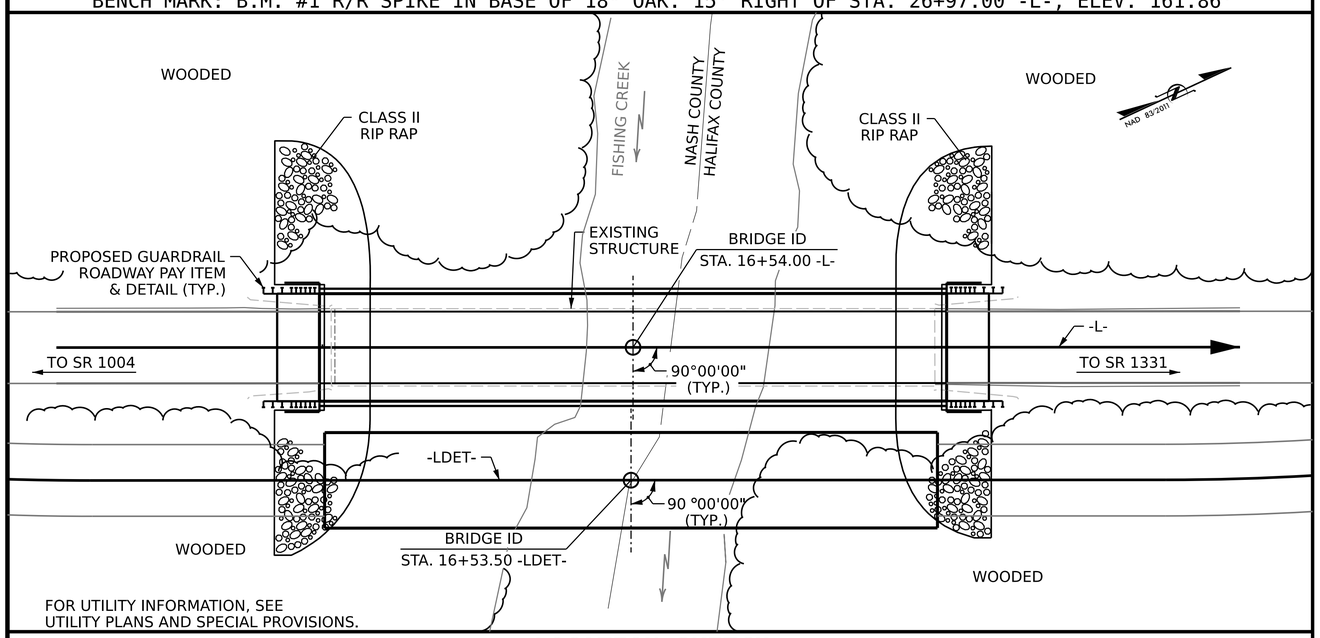

LOCATION SKETCH

HYDRAULIC DATA

DESIGN DISCHARGE	=16900 CFS
FREQUENCY OF DESIGN FLOOD	=50 YRS.
DESIGN HIGH WATER ELEVATION	=162.2 FT.
DRAINAGE AREA	=221 SQ. MI.
BASE DISCHARGE (Q100)	=21784 CFS
BASE HIGH WATER ELEVATION	=164.5 FT.

OVERTOPPING FLOOD DATA

OVERTOPPING DISCHARGE	=25600 CFS
FREQUENCY OF OVERTOPPING FLOOD	=500+ YR.
OVERTOPPING FLOOD ELEVATION	=166.3 FT.

NOTES:

ASSUMED LIVE LOAD = HL-93 OR ALTERNATE LOADING.

THIS BRIDGE HAS BEEN DESIGNED IN ACCORDANCE WITH THE AASHTO LRFD BRIDGE DESIGN SPECIFICATIONS.

THIS BRIDGE IS LOCATED IN SEISMIC ZONE 1.

FOR OTHER DESIGN DATA AND GENERAL NOTES, SEE SHEET SN.

FOR SUBMITTAL OF WORKING DRAWINGS, SEE SPECIAL PROVISIONS.

FOR FALSEWORK AND FORMWORK, SEE SPECIAL PROVISIONS.

FOR CRANE SAFETY, SEE SPECIAL PROVISIONS.

FOR GROUT FOR STRUCTURES, SEE SPECIAL PROVISIONS.

FOR ASBESTOS ASSESSMENT FOR BRIDGE DEMOLITION AND RENOVATION ACTIVITIES, SEE SPECIAL PROVISIONS.

PRESTRESSED CONCRETE DECK PANELS MAY BE USED IN LIEU OF METAL STAY-IN-PLACE FORMS IN ACCORDANCE WITH ARTICLE 420-3 OF THE STANDARD SPECIFICATIONS.

NEEDLE BEAMS WILL NOT BE ALLOWED UNLESS OTHERWISE CALLED FOR ON THE PLANS OR APPROVED BY THE ENGINEER.

FOR EROSION CONTROL MEASURES, SEE EROSION CONTROL PLANS.

THE EXISTING STRUCTURE CONSISTS OF 5 SPANS @ 40'-0"WITH A CLEAR ROADWAY WIDTH OF 26'-0" WITH RC FLOOR AND RC DECK GIRDERS ON RC END BENTS AND BENTS ON PRECAST REINFORCED CONCRETE PILES AND LOCATED AT THE PROPOSED STRUCTURE SHALL BE REMOVED. THE EXISTING BRIDGE IS PRESENTLY NOT POSTED FOR LOAD LIMIT. SHOULD THE STRUCTURAL INTEGRITY OF THE BRIDGE DETERIORATE DURING CONSTRUCTION OF THE PROPOSED BRIDGE, A LOAD LIMIT MAY BE POSTED AND MAY BE REDUCED AS FOUND NECESSARY DURING THE LIFE OF THE PROJECT.

THE CONTRACTOR WILL BE REQUIRED TO CONSTRUCT, MAINTAIN, AND AFTERWARDS REMOVE A TEMPORARY STRUCTURE AT STA. 16+53.50 -LDET- FOR USE DURING CONSTRUCTION OF THE PROPOSED STRUCTURE. FOR CONSTRUCTION, MAINTENANCE, AND REMOVAL OF THE TEMPORARY STRUCTURE, SEE SPECIAL PROVISIONS.

TEMPORARY FILL SHALL NOT BLOCK MORE THAN 50 PERCENT OF THE CHANNEL AT ANY TIME.

THE SUBSTRUCTURE OF THE EXISTING BRIDGE INDICATED ON THE PLANS IS FROM THE BEST INFORMATION AVAILABLE. SINCE THIS INFORMATION IS SHOWN FOR THE CONVENIENCE OF THE CONTRACTOR, THE CONTRACTOR SHALL HAVE NO CLAIM WHATSOEVER AGAINST THE DEPARTMENT OF TRANSPORTATION FOR ANY DELAYS OR ADDITIONAL COST INCURRED BASED ON DIFFERENCES BETWEEN THE EXISTING BRIDGE SUBSTRUCTURE SHOWN ON THE PLANS AND THE ACTUAL CONDITIONS AT THE PROJECT SITE.

REMOVAL OF THE EXISTING BRIDGE SHALL BE PERFORMED SO AS NOT TO ALLOW DEBRIS TO FALL INTO THE WATER. THE CONTRACTOR SHALL SUBMIT DEMOLITION PLANS FOR REVIEW AND REMOVE THE BRIDGE IN ACCORDANCE WITH ARTICLE 402-2 OF THE STANDARD SPECIFICATIONS.

THIS STRUCTURE HAD BEEN DESIGNED IN ACCORDANCE WITH "HEC 18-EVALUATING SCOUR AT BRIDGES."

THE MATERIAL SHOWN IN THE CROSS HATCHED AREA ON SHEET 1 OF 4 SHALL BE EXCAVATED FOR A DISTANCE OF 64' LEFT AND 68' RIGHT OF CENTERLINE ROADWAY AT END BENT 1, AND 43' LEFT AND 63' RIGHT OF CENTERLINE ROADWAY AT END BENT 2, OR AS DIRECTED BY THE ENGINEER. THIS WORK WILL BE PAID FOR AT THE CONTRACT LUMP SUM PRICE FOR UNCLASSIFIED STRUCTURE EXCAVATION.

AT THE CONTRACTOR'S OPTION, AND UPON REMOVAL OF THE CAUSEWAY, THE CLASS II RIP RAP USED IN THE CAUSEWAY MAY BE PLACED AS RIP RAP SLOPE PROTECTION. SEE SPECIAL PROVISIONS FOR CONSTRUCTION, MAINTENANCE AND REMOVAL OF TEMPORARY ACCESS AT STATION 16+54.00 -L-.

REMOVABLE FORMS MAY BE USED IN LIEU OF METAL STAY-IN-PLACE FORMS IN ACCORDANCE WITH THE ARTICLE 420-3 OF THE STANDARD SPECIFICATIONS.

PROJECT NO. BR-0090

NASH COUNTY

STATION: 16+54.00 -L-

SHEET 4 OF 4

NORTH CAROLINA PROFESSIONAL SEAL 030024 ENGINEER ASTER G. ABRAHA

Aster Abraha

DocuSigned by: 7D6A9BAEDB5D4F0...

06/26/2025

STATE OF NORTH CAROLINA
DEPARTMENT OF TRANSPORTATION
RALEIGH

GENERAL DRAWING

FOR BRIDGE OVER FISHING CREEK ON HWY 561 BETWEEN SR 1004 & SR 1331

DRAWN BY : J. BALDWIN / S. LOTFI DATE : 12/2022
CHECKED BY : S. WANCE / S. LOTFI DATE : 05/2024
DESIGN ENGINEER OF RECORD: M.M. AHMED DATE : 05/2025

6/24/2025
R:\Structures\Plans\401_007_BR0090_SMU_GD4_S-04_600036.dgn
aabraha

DOCUMENT NOT CONSIDERED FINAL UNLESS ALL SIGNATURES COMPLETED

REVISIONS						SHEET NO.
NO.	BY:	DATE:	NO.	BY:	DATE:	S-04
1			3			TOTAL SHEETS
2			4			35

LOAD AND RESISTANCE FACTOR RATING (LRFR) SUMMARY FOR PRESTRESSED CONCRETE GIRDERS

LOAD TYPE		VEHICLE	WEIGHT (W) (TONS)	CONTROLLING LOAD RATING (#)	MINIMUM RATING FACTORS (RF)	TONS = W X RF	STRENGTH I LIMIT STATE											SERVICE III LIMIT STATE						COMMENT NUMBER
								MOMENT					SHEAR						MOMENT					
							LIVELOAD FACTORS (γLL)	DISTRIBUTION FACTORS (DF)	RATING FACTOR	SPAN	GIRDER LOCATION	DISTANCE FROM LEFT END OF SPAN (ft)	DISTRIBUTION FACTORS (DF)	RATING FACTOR	SPAN	GIRDER LOCATION	DISTANCE FROM LEFT END OF SPAN (ft)	LIVELOAD FACTORS (γLL)	DISTRIBUTION FACTORS (DF)	RATING FACTOR	SPAN	GIRDER LOCATION	DISTANCE FROM LEFT END OF SPAN (ft)	
DESIGN LOAD		HL-93 (INVENTORY)	N/A	1	1.13	--	1.75	0.750	1.25	B	1	49.13	0.814	1.37	B	2	92.96	0.80	0.750	1.13	B	1	49.13	
		HL-93 (OPERATING)	N/A		1.62	--	1.35	0.750	1.62	B	1	49.13	0.814	1.78	B	2	92.96	N/A	--	--	--	--	--	
		HS-20 (INVENTORY)	36.000	2	1.57	56.43	1.75	0.750	1.74	B	1	49.13	0.814	1.84	B	2	92.96	0.80	0.750	1.57	B	1	49.13	
		HS-20 (OPERATING)	36.000		2.25	81.15	1.35	0.750	2.25	B	1	49.13	0.814	2.38	B	2	92.96	N/A	--	--	--	--	--	
LEGAL LOAD RATING	SINGLE VEHICLE (SV)	SNSH	13.500		3.71	50.14	1.40	0.796	4.79	C	2	23.75	0.814	5.40	A	2	34.50	0.80	0.750	3.71	B	1	49.13	
		SNGARBS2	20.000		2.69	53.82	1.40	0.750	3.73	B	1	49.13	0.814	3.97	B	2	92.96	0.80	0.750	2.69	B	1	49.13	
		SNAGRIS2	22.000		2.52	55.39	1.40	0.750	3.49	B	1	49.13	0.814	3.66	B	2	92.96	0.80	0.750	2.52	B	1	49.13	
		SNCOTTS3	27.250		1.85	50.30	1.40	0.796	2.39	C	2	23.75	0.814	2.72	A	2	34.50	0.80	0.750	1.85	B	1	49.13	
		SNAGGRS4	34.925		1.51	52.84	1.40	0.796	2.09	C	2	23.75	0.814	2.30	B	2	92.96	0.80	0.750	1.51	B	1	49.13	
		SNS5A	35.550		1.48	52.67	1.40	0.796	2.04	C	2	23.75	0.814	2.31	B	2	92.96	0.80	0.750	1.48	B	1	49.13	
		SNS6A	39.950		1.35	53.83	1.40	0.750	1.87	B	1	49.13	0.814	2.09	B	2	92.96	0.80	0.750	1.35	B	1	49.13	
		SNS7B	42.000		1.28	53.87	1.40	0.750	1.78	B	1	49.13	0.814	2.03	B	2	92.96	0.80	0.750	1.28	B	1	49.13	
	TRUCK TRACTOR SEMI-TRAILER (TTST)	TNAGRIT3	33.000		1.64	54.10	1.40	0.750	2.27	B	1	49.13	0.814	2.50	B	2	92.96	0.80	0.750	1.64	B	1	49.13	
		TNT4A	33.075		1.64	54.36	1.40	0.750	2.28	B	1	49.13	0.814	2.45	B	2	92.96	0.80	0.750	1.64	B	1	49.13	
		TNT6A	41.600		1.33	55.43	1.40	0.750	1.85	B	1	49.13	0.814	2.12	B	2	92.96	0.80	0.750	1.33	B	1	49.13	
		TNT7A	42.000		1.33	55.99	1.40	0.750	1.85	B	1	49.13	0.814	2.09	B	2	92.96	0.80	0.750	1.33	B	1	49.13	
		TNT7B	42.000		1.36	57.32	1.40	0.750	1.89	B	1	49.13	0.814	2.00	B	2	92.96	0.80	0.750	1.36	B	1	49.13	
		TNAGRIT4	43.000		1.31	56.29	1.40	0.750	1.82	B	1	49.13	0.814	1.94	B	2	92.96	0.80	0.750	1.31	B	1	49.13	
		TNAGT5A	45.000		1.24	55.77	1.40	0.750	1.72	B	1	49.13	0.814	1.90	B	2	92.96	0.80	0.750	1.24	B	1	49.13	
		TNAGT5B	45.000	3	1.23	55.30	1.40	0.750	1.70	B	1	49.13	0.814	1.85	B	2	92.96	0.80	0.750	1.23	B	1	49.13	
EMERGENCY VEHICLE (EV)		EV2	28.750		1.89	54.43	1.30	0.750	2.83	B	1	49.13	0.814	2.99	B	2	92.96	0.80	0.750	1.89	B	1	49.13	
		EV3	43.000	4	1.25	53.64	1.30	0.750	1.86	B	1	49.13	0.814	2.01	B	2	92.96	0.80	0.750	1.25	B	1	49.13	

LOAD FACTORS:

DESIGN LOAD RATING FACTORS	LIMIT STATE	γDC	γDW
	STRENGTH I	1.25	1.50
	SERVICE III	1.00	1.00

NOTES:

MINIMUM RATING FACTORS ARE BASED ON THE STRENGTH I AND SERVICE III LIMIT STATES.

ALLOWABLE STRESSES FOR SERVICE III LIMIT STATE ARE AS REQUIRED FOR DESIGN.

COMMENTS:

1.
2.
3.
4.

CONTROLLING LOAD RATING
1 DESIGN LOAD RATING (HL-93)
2 DESIGN LOAD RATING (HS-20)
3 LEGAL LOAD RATING **
4 EMERGENCY VEHICLE LOAD RATING **
** SEE CHART FOR VEHICLE TYPE
GIRDER LOCATION
I - INTERIOR GIRDER
EL - EXTERIOR LEFT GIRDER
ER - EXTERIOR RIGHT GIRDER

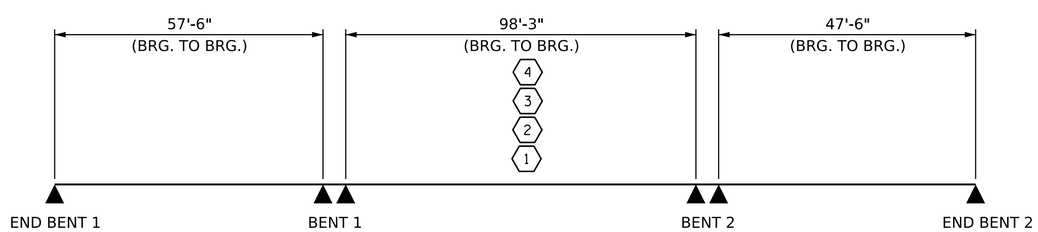

LRFR SUMMARY

PROJECT NO. BR-0090
NASH COUNTY
STATION: 16+54.00 -L-

NORTH CAROLINA PROFESSIONAL SEAL 030024 ENGINEER ASTER G. ABRAHA
Aster Abraha
DDA094AED5104FD...
07/02/2025

STATE OF NORTH CAROLINA
DEPARTMENT OF TRANSPORTATION
RALEIGH
STANDARD
LRFR SUMMARY FOR PRESTRESSED CONCRETE GIRDERS
(NON-INTERSTATE TRAFFIC)

REVISIONS						SHEET NO.
NO.	BY:	DATE:	NO.	BY:	DATE:	S-05
1			3			TOTAL SHEETS
2			4			35

DOCUMENT NOT CONSIDERED FINAL UNLESS ALL SIGNATURES COMPLETED

DRAWN BY : M.M. AHMED DATE : 01/2025
CHECKED BY : A. ABRAHA P.E. DATE : 06/2025
DESIGN ENGINEER OF RECORD: M.M. AHMED DATE : 01/2025

7/2/2025
R:\Structures\Plans\401_009_BR0090_SMU_LRFR_S-05_600036_Rev.dgn
agbraha

STD. NO. LRFR1

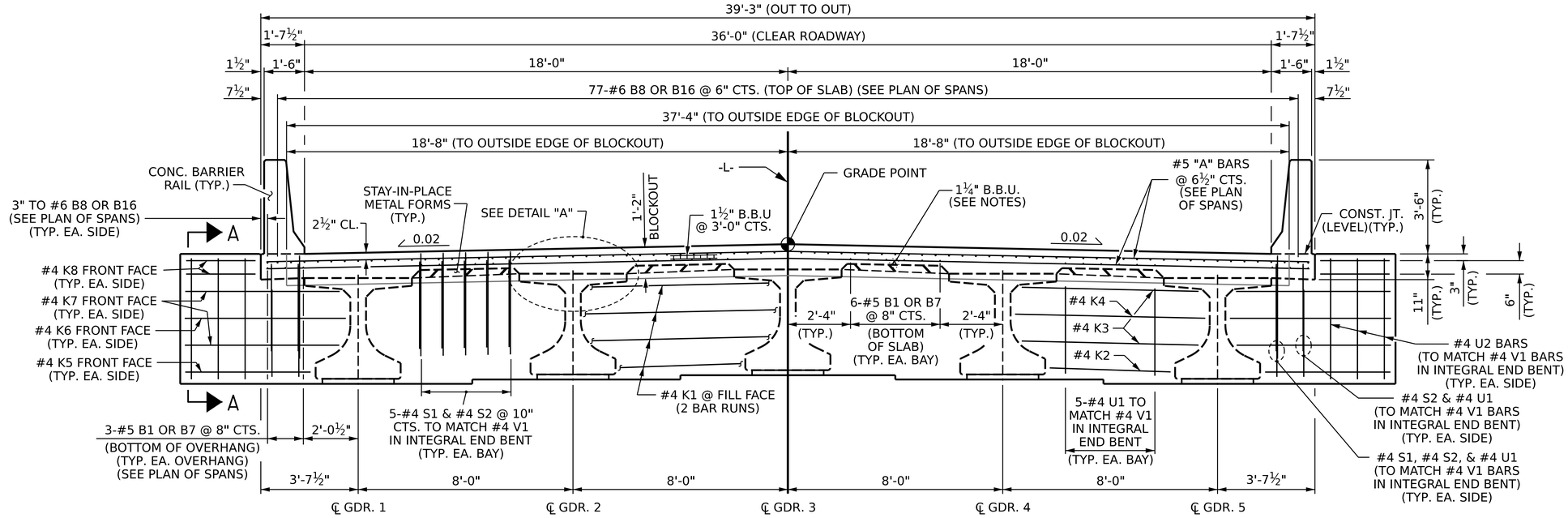

TYPICAL SECTION AT INTEGRAL END BENT

SHOWING ABUTMENT WALL @ FILL FACE OF END BENTS.
WINGS NOT SHOWN FOR CLARITY.

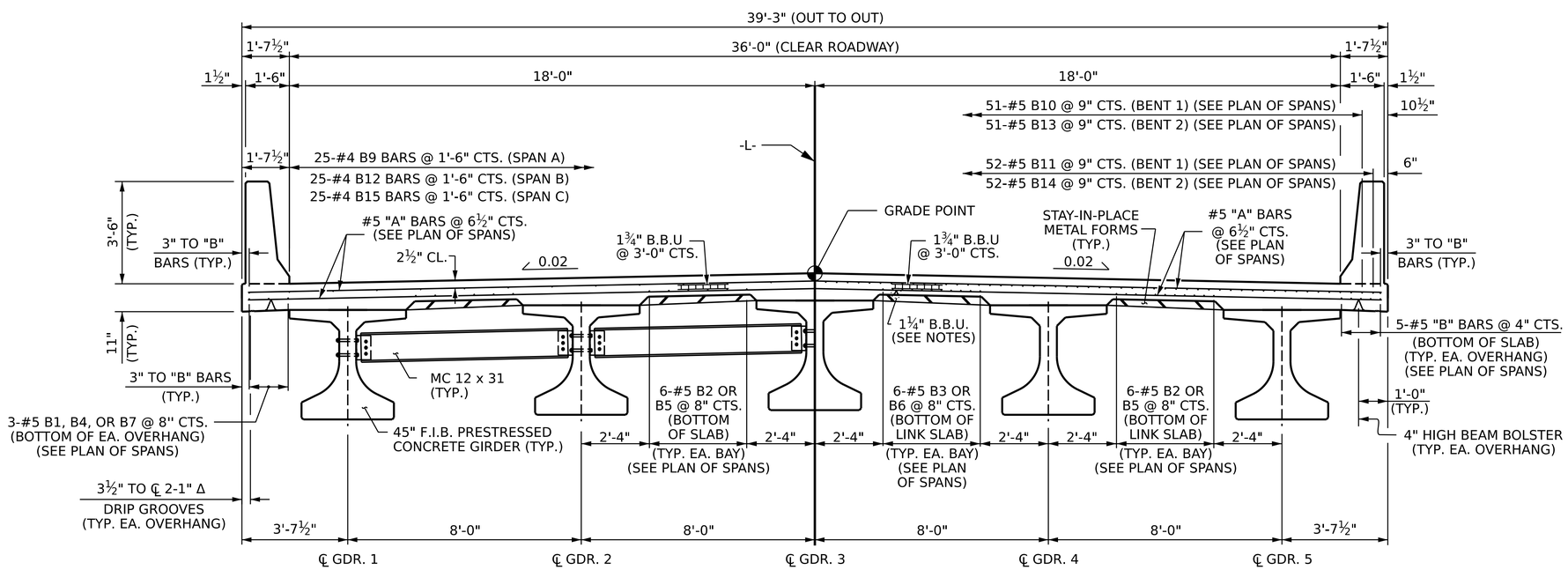

HALF SECTION @ INTERMEDIATE DIAPHRAGM

HALF SECTION @ LINK SLAB @ BENT

TYPICAL SECTION

NOTES

PROVIDE 1 1/4" HIGH BEAM BOLSTERS UPPER AT 4'-0" CTS. ATOP THE METAL STAY-IN-PLACE FORMS TO SUPPORT THE BOTTOM MAT OF 'A' BARS.

LONGITUDINAL STEEL MAY BE SHIFTED SLIGHTLY, AS NECESSARY, TO AVOID INTERFERENCE WITH STIRRUPS IN PRESTRESSED CONCRETE GIRDERS.

PREVIOUSLY CAST CONCRETE IN A CONTINUOUS UNIT SHALL HAVE ATTAINED A MINIMUM COMPRESSIVE STRENGTH OF 3,000 PSI BEFORE ADDITIONAL CONCRETE IS CAST IN THE UNIT.

FOR INTERMEDIATE STEEL DIAPHRAGMS DETAILS, SEE "INTERMEDIATE STEEL DIAPHRAGMS FOR 45" FLORIDA I-BEAMS" SHEET.

METAL STAY-IN-PLACE FORMS SHALL NOT BE WELDED TO THE SUPPORT ANGLES WITHIN THE LINK SLAB AREAS. SEE "PLAN OF SPANS'' SHEETS FOR LOCATION.

BARRIER RAILS IN A CONTINUOUS UNIT SHALL NOT BE CAST UNTIL ALL THE SLAB CONCRETE IN THE UNIT HAS REACHED A MINIMUM COMPRESSIVE STRENGTH OF 3,000 PSI.

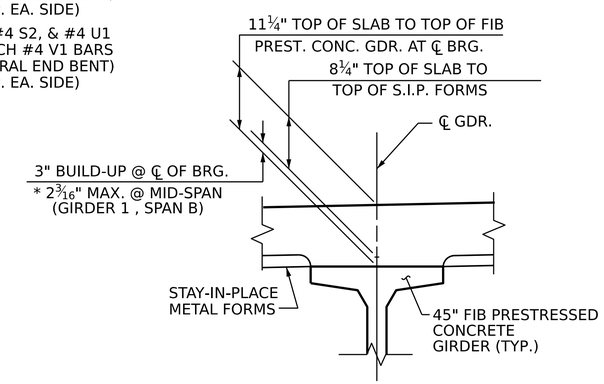

DETAIL "A"

*BASED ON PREDICTED FINAL CAMBER AND THEORETICAL GRADE LINE ELEVATIONS.

PROJECT NO. BR-0090

NASH COUNTY

STATION: 16+54.00 -L-

SHEET 1 OF 2

STATE OF NORTH CAROLINA
DEPARTMENT OF TRANSPORTATION
RALEIGH

SUPERSTRUCTURE

TYPICAL SECTION

NORTH CAROLINA PROFESSIONAL SEAL 030024 ENGINEER ASTER G. ABRAHA

Aster Abraha
7DA094AED5104FD...
06/26/2025

DOCUMENT NOT CONSIDERED FINAL UNLESS ALL SIGNATURES COMPLETED

REVISIONS								SHEET NO.
NO.	BY:	DATE:	NO.	BY:	DATE:			S-06
1			3					TOTAL SHEETS
2			4					35

DRAWN BY : G. AYES/M. M. AHMED DATE : 1/2023
CHECKED BY : S. WANCE/A. ABRAHA DATE : 2/2025
DESIGN ENGINEER OF RECORD: M. M. AHMED DATE : 3/2023

6/24/2025
R:\Structures\Plans\401_011_BR0090_SMU_TS_S-06_630036.dgn
aabraha

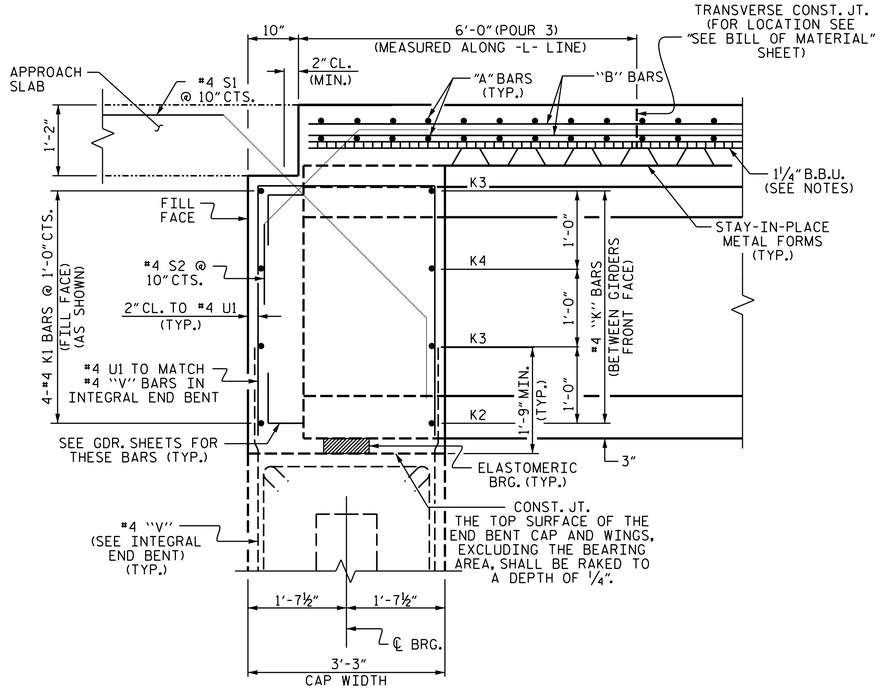

SECTION THRU INTEGRAL END BENT

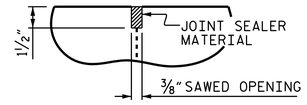

DETAIL "B"

A 1½" DEEP ⅜" WIDE CONTRACTION JOINT AT BENT CONTROL LINE SHALL BE SAWN WITHIN 24 HOURS OF POURING THE DECK. THE JOINT SHALL BE FILLED WITH JOINT SEALER MAT'L. THE JOINT SEALER MATERIAL SHALL CONFORM TO THE REQUIREMENTS OF SECTION 1028-3 OF THE STANDARD SPECIFICATIONS.

LINK SLAB TABLE		
BENT NO.	DIMENSION A	DIMENSION B
1	3'-6"	5'-3"
2	5'-3"	3'-6"

*MEASURED ALONG ℄ GIRDER

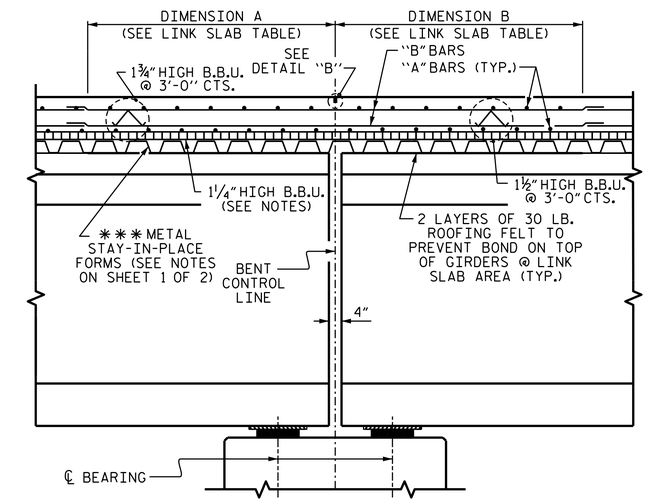

SECTION AT LINK SLAB

*** METAL STAY-IN-PLACE FORMS SHALL NOT BE WELDED TO THE GIRDER FLANGES IN THE REGION OF LINK SLAB

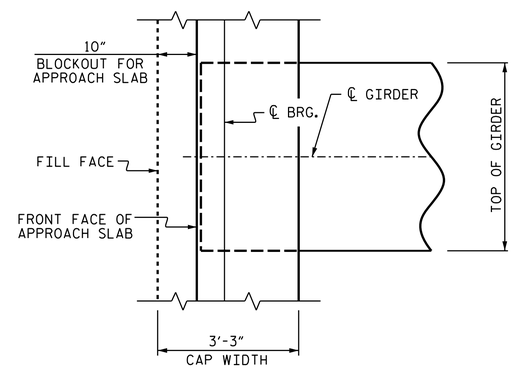

PLAN OF GIRDER AT INTEGRAL END BENT

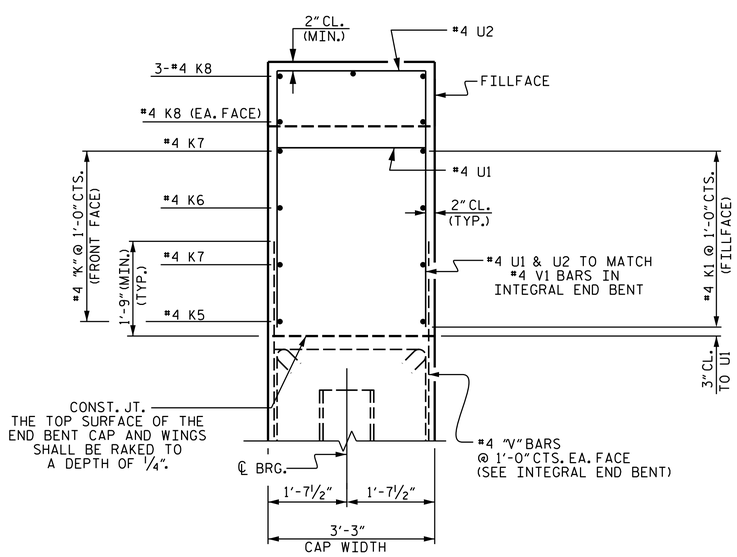

SECTION A-A

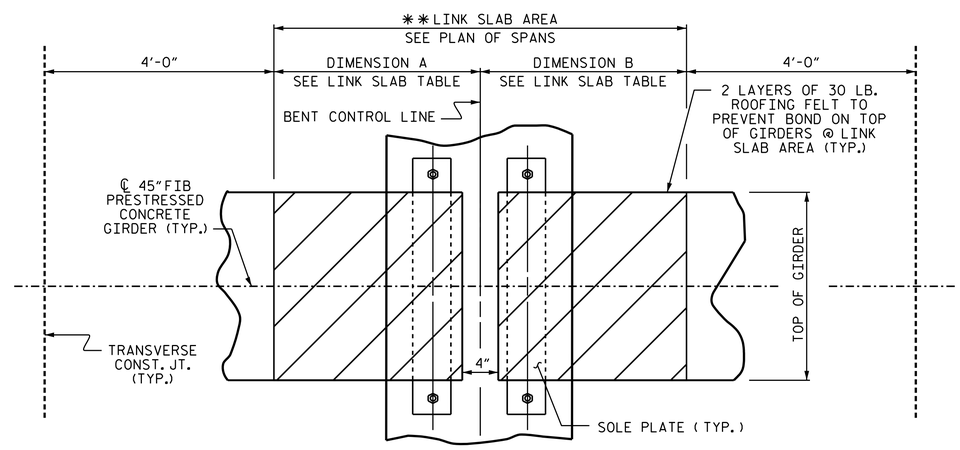

PLAN AT INTERIOR BENTS

** THE TOP OF THE GIRDER IN THE AREA OF THE LINK SLAB SHALL BE SMOOTH AND FREE OF STIRRUPS OR ANCHOR STUDS.

PROJECT NO. BR-0090

NASH COUNTY

STATION: 16+54.00 -L-

SHEET 2 OF 2

STATE OF NORTH CAROLINA
DEPARTMENT OF TRANSPORTATION
RALEIGH

SUPERSTRUCTURE

TYPICAL SECTION

NORTH CAROLINA PROFESSIONAL SEAL 030024 ENGINEER ASTER G. ABRAHA
Aster Abraha
DocuSigned by: 1D26D9AE0D104FD...
06/26/2025

DOCUMENT NOT CONSIDERED FINAL UNLESS ALL SIGNATURES COMPLETED

REVISIONS								SHEET NO.
NO.	BY:	DATE:	NO.	BY:	DATE:			S-07
1			3					TOTAL SHEETS
2			4					35

DRAWN BY : G. AYES/M. M. AHMED DATE : 02/2025
CHECKED BY : S. WANCE/A. ABRAHA P.E. DATE : 02/2025
DESIGN ENGINEER OF RECORD: M. M. AHMED DATE : 03/2025

6/24/2025
R:\Structures\Plans\401_013_BR0090_SMU_TS_S-07_630036.dgn
agbraha

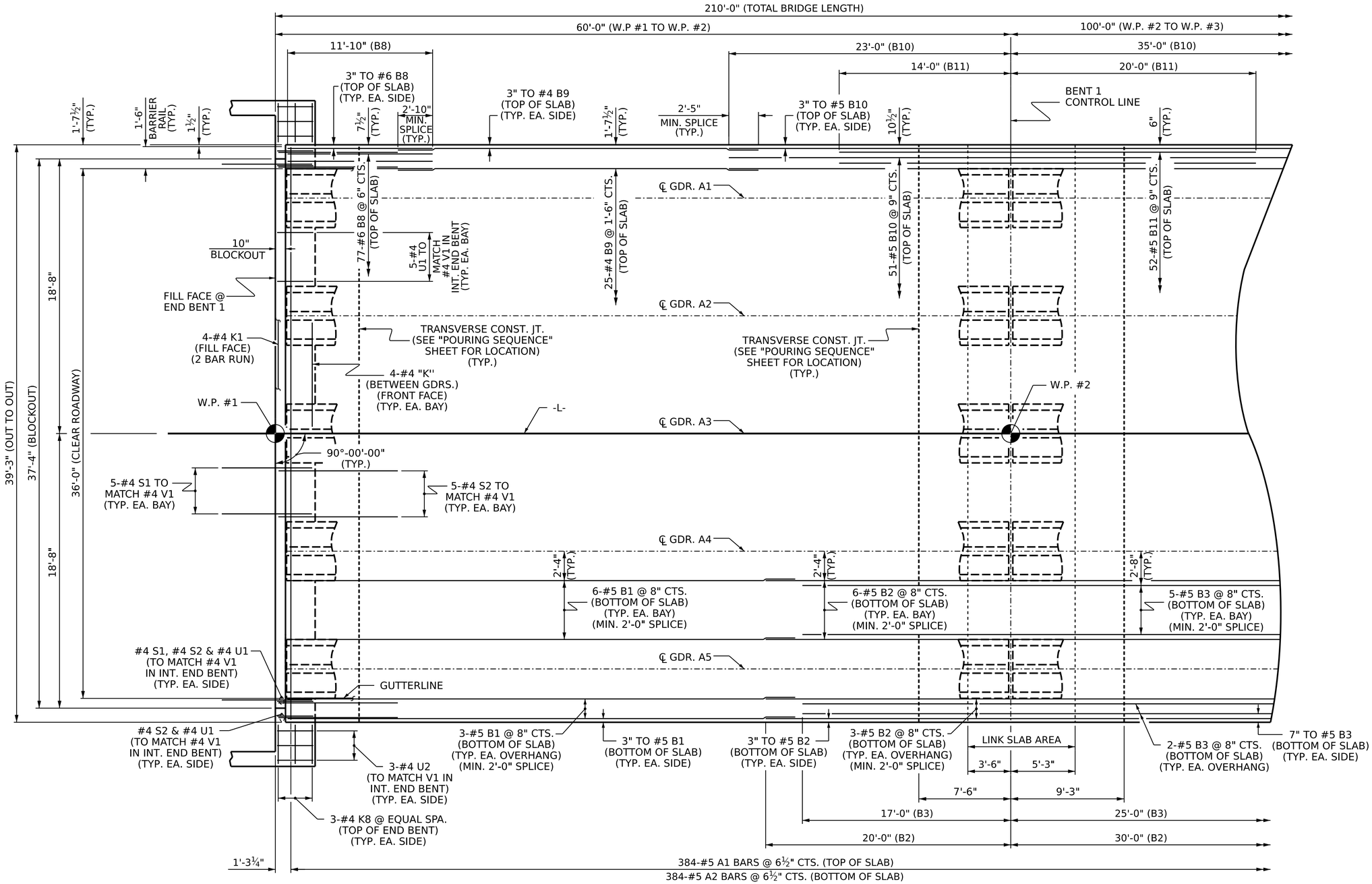

SPAN A

PROJECT NO. BR-0090

NASH COUNTY

STATION: 16+54.00 -L-

SHEET 1 OF 4

STATE OF NORTH CAROLINA
DEPARTMENT OF TRANSPORTATION
RALEIGH

SUPERSTRUCTURE

PLAN OF SPANS SPAN A

NORTH CAROLINA PROFESSIONAL SEAL 030024 ENGINEER ASTER G. ABRAHA

Aster Abraha
DDA094AED5104FD...
06/26/2025

DOCUMENT NOT CONSIDERED FINAL UNLESS ALL SIGNATURES COMPLETED

REVISIONS							
NO.	BY:	DATE:	NO.	BY:	DATE:	SHEET NO.	
1			3			S-08	
2			4			TOTAL SHEETS	
						35	

DRAWN BY : G. AYES DATE : 1/2023
CHECKED BY : S. WANCE/ A. ABRAHA P.E. DATE : 02/2025
DESIGN ENGINEER OF RECORD: M. M. AHMED DATE : 03/2025

6/24/2025
R:\Structures\Plans\401_015_BR0090_SMU_S*_S-08_630036.dgn
aabraha

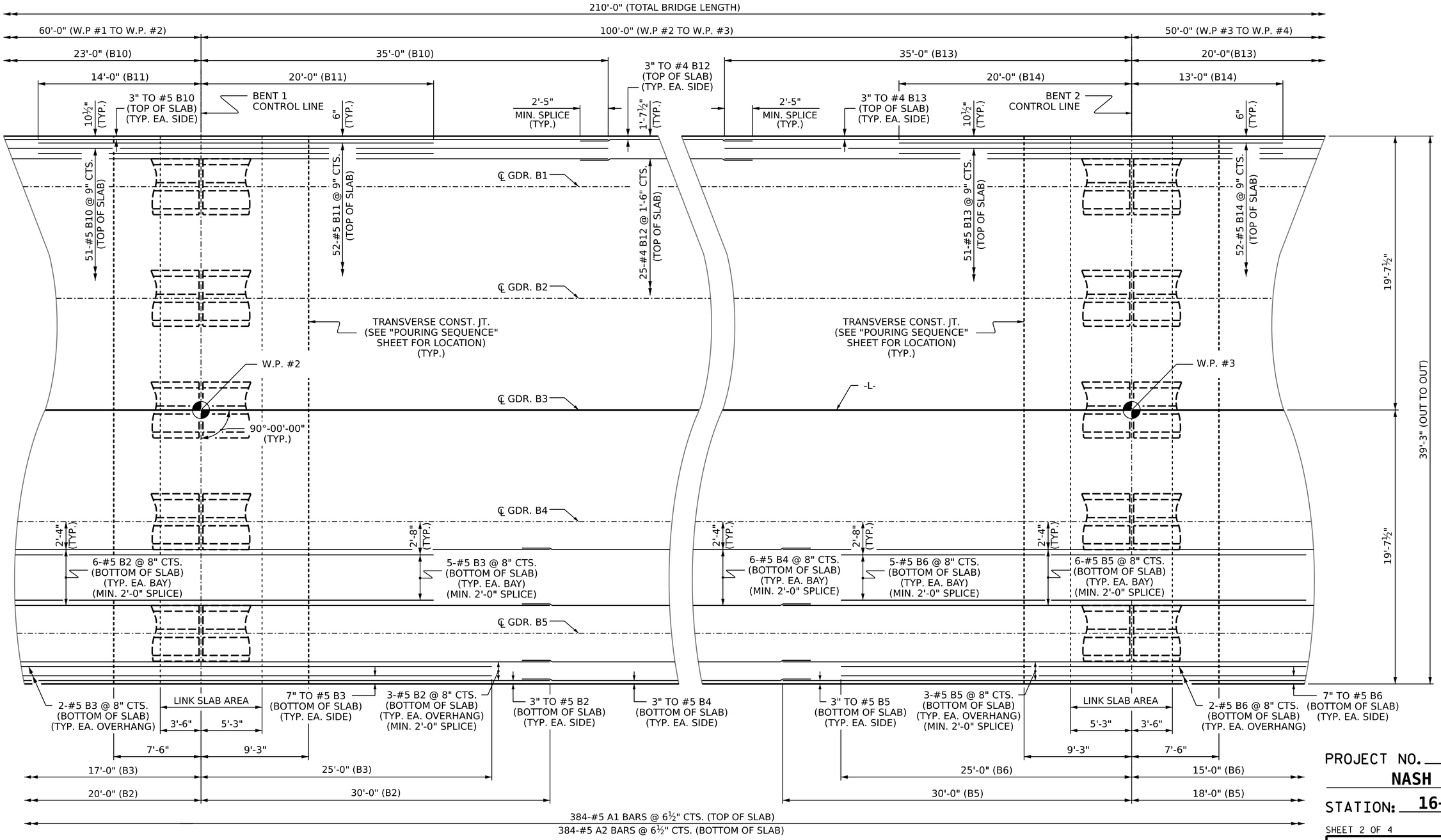

SPAN B

PROJECT NO. BR-0090

NASH COUNTY

STATION: 16+54.00 -L-

SHEET 2 OF 4

STATE OF NORTH CAROLINA
DEPARTMENT OF TRANSPORTATION
RALEIGH

SUPERSTRUCTURE

PLAN OF SPANS
SPAN B

NORTH CAROLINA PROFESSIONAL SEAL 030024 ENGINEER ASTER G. ABRAHA

Aster Abraha
DOCUSIGNED BY: DDA09A4ED510AFD...
06/26/2025

DOCUMENT NOT CONSIDERED FINAL UNLESS ALL SIGNATURES COMPLETED

REVISIONS							
NO.	BY:	DATE:	NO.	BY:	DATE:	SHEET NO.	S-09
1			3			TOTAL SHEETS	35
2			4				

DRAWN BY : G. AYES DATE : 1/2023
CHECKED BY : S. WANCE/ A. ABRAHA P.E. DATE : 2/2025
DESIGN ENGINEER OF RECORD: M. M. AHMED DATE : 2/2025

5/12/2025
R:\Structures\Plans\401_017_BR0090_SMU_S*_S-09_630036.dgn
aabraha

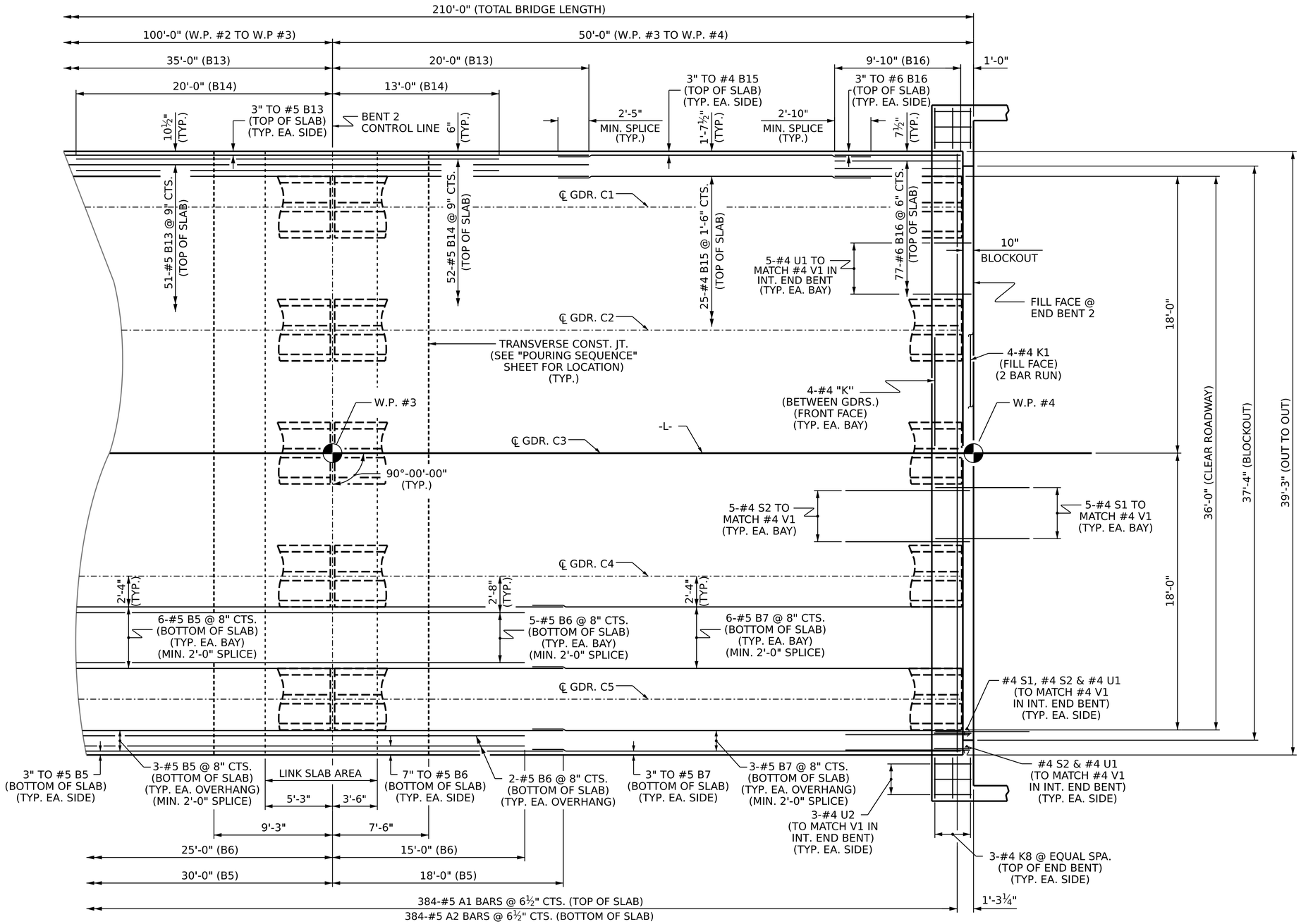

SPAN C

PROJECT NO. BR-0090

NASH COUNTY

STATION: 16+54.00 -L-

SHEET 3 OF 4

STATE OF NORTH CAROLINA
DEPARTMENT OF TRANSPORTATION
RALEIGH

SUPERSTRUCTURE

PLAN OF SPANS SPAN C

NORTH CAROLINA PROFESSIONAL SEAL 030024 ENGINEER ASTER G. ABRAHA

Aster Abraha
DDA094AED5104FD...
06/26/2025

DRAWN BY : G. AYES DATE : 1/2023
CHECKED BY : S. WANCE/ A. ABRAHA P.E. DATE : 2/2025
DESIGN ENGINEER OF RECORD: M. M. AHMED DATE : 3/2025

6/24/2025
R:\Structures\Plans\401_019_BR0090_SMU_S*_S-10_630036.dgn
aabraha

DOCUMENT NOT CONSIDERED FINAL UNLESS ALL SIGNATURES COMPLETED

REVISIONS						SHEET NO.
NO.	BY:	DATE:	NO.	BY:	DATE:	S-10
1			3			TOTAL SHEETS
2			4			35

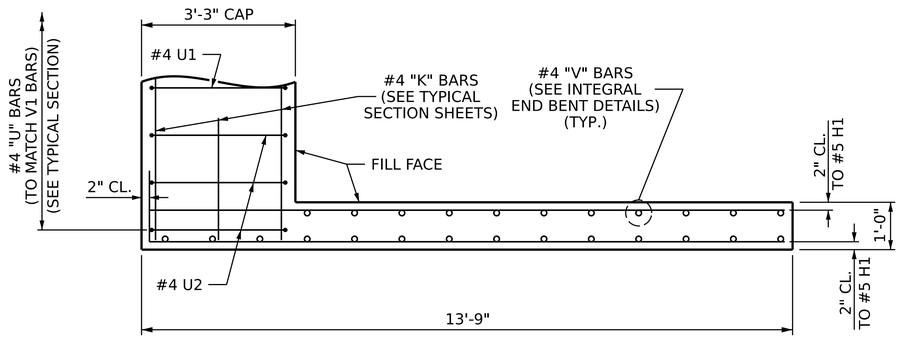

PLAN OF WING W1

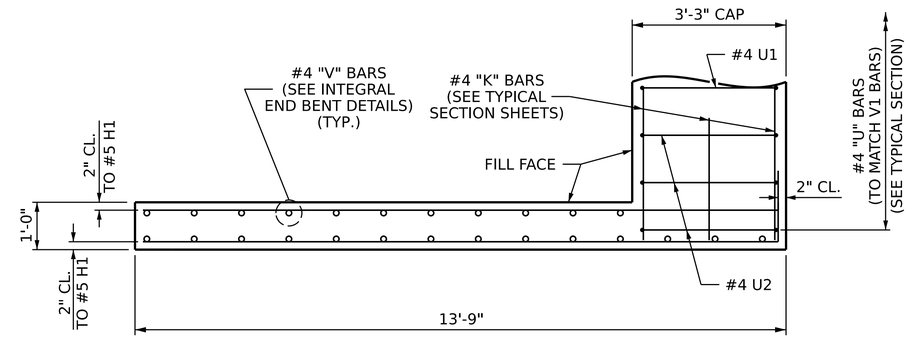

PLAN OF WING W2

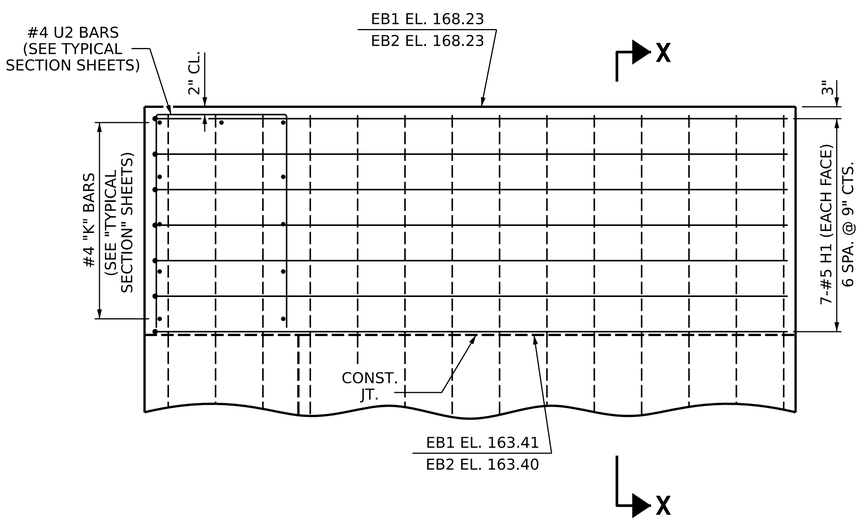

ELEVATION OF WING W1

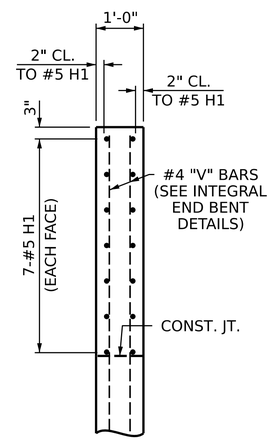

SECTION X-X

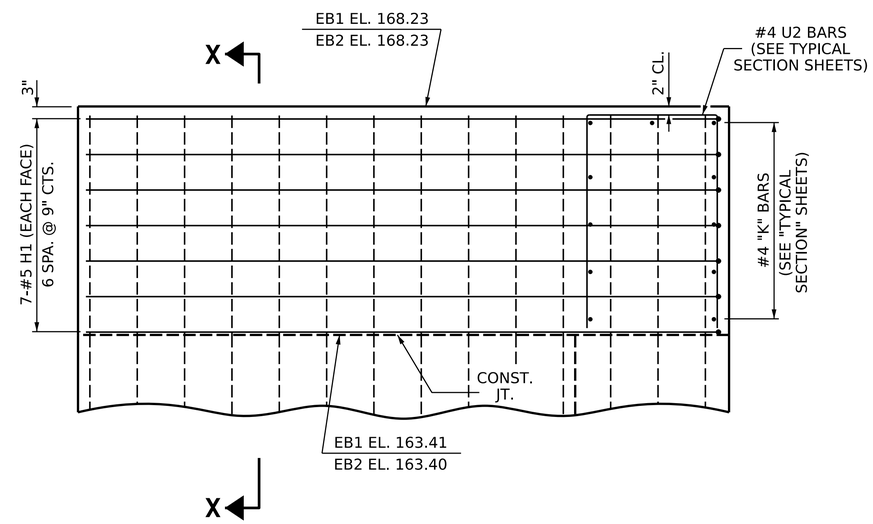

ELEVATION OF WING W2

PROJECT NO. BR-0090

NASH COUNTY

STATION: 16+54.00 -L-

SHEET 4 OF 4

UPPER WINGS AT INTEGRAL END BENT 1 & 2

FOR LOWER WING REINFORCING STEEL AND DETAILS, SEE "INTEGRAL END BENT" SHEETS

NORTH CAROLINA PROFESSIONAL SEAL 030024 ENGINEER ASTER G. ABRAHA

Aster Abraha

DocuSigned by: 7D9D9A9E2E934FD...

06/26/2025

STATE OF NORTH CAROLINA
DEPARTMENT OF TRANSPORTATION
RALEIGH

SUPERSTRUCTURE

PLAN OF SPANS DETAILS AT END BENTS

REVISIONS							SHEET NO.
NO.	BY:	DATE:	NO.	BY:	DATE:		S-11
1			3				TOTAL SHEETS
2			4				35

DOCUMENT NOT CONSIDERED FINAL UNLESS ALL SIGNATURES COMPLETED

DRAWN BY :	G. AYES	DATE :	2/2023
CHECKED BY :	S. WANCE	DATE :	2/2023
DESIGN ENGINEER OF RECORD:	M. M. AHMED	DATE :	3/2025

5/12/2025
R:\Structures\Plans\401_021_BR0090_SMU_S*_S-11_630036.dgn
aabraha

NOTE: FOR INTERMEDIATE STEEL DIAPHRAGMS SEE "INTERMEDIATE STEEL DIAPHRAGMS FOR 45"FIB PRESTRESSED CONCRETE GIRDERS" SHEET.

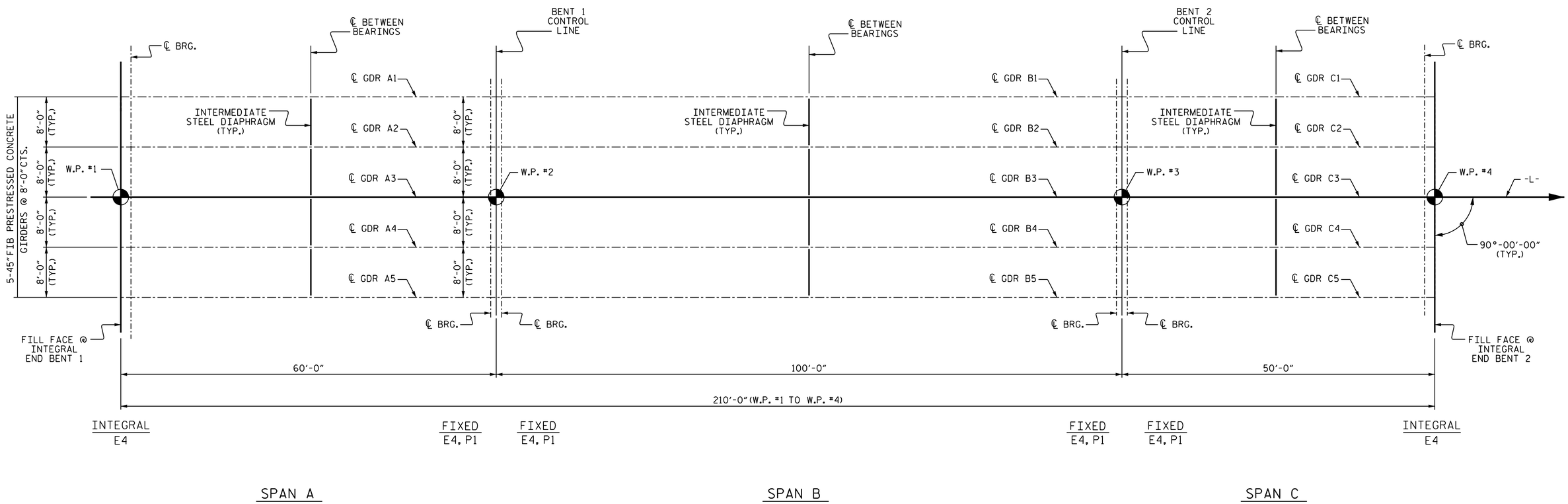

GIRDER LAYOUT

PROJECT NO. BR-0090

NASH COUNTY

STATION: 16+54.00 -L-

STATE OF NORTH CAROLINA
DEPARTMENT OF TRANSPORTATION
RALEIGH

SUPERSTRUCTURE

FRAMING PLAN

NORTH CAROLINA PROFESSIONAL SEAL 030024 ENGINEER ASTER G. ABRAHA

Aster Abraha
FDA094AED504FD...
06/26/2025

DOCUMENT NOT CONSIDERED FINAL UNLESS ALL SIGNATURES COMPLETED

REVISIONS								
NO.	BY:	DATE:	NO.	BY:	DATE:		SHEET NO.	
1			3				S-12	
2			4				TOTAL SHEETS	
							35	

DRAWN BY : M. AHMED DATE : 12/5/22
CHECKED BY : A. ABRAHA P.E. DATE : 04/15/25
DESIGN ENGINEER OF RECORD: M. AHMED DATE : 04/15/25

5/8/2025
R:\Structures\Plans\401_023_BR0090_SMU_FP_S-12_630036.dgn
aabraha

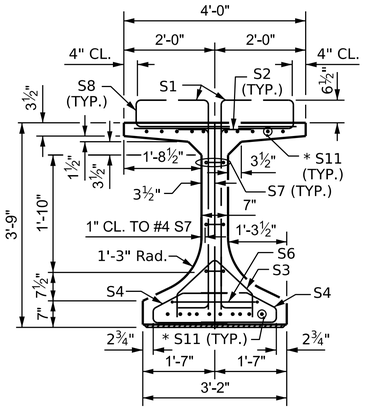

SECTION A-A

* FOR S11 BARS. SEE DETAIL "C" OF "45" FIB PRESTRESSED CONCRETE GIRDER DETAILS" SHEET

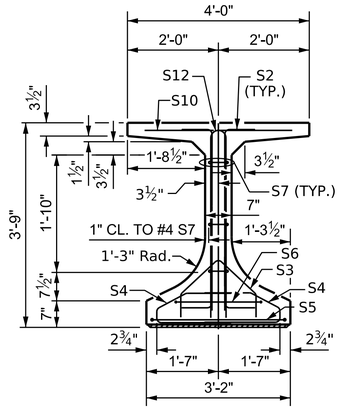

SECTION B-B

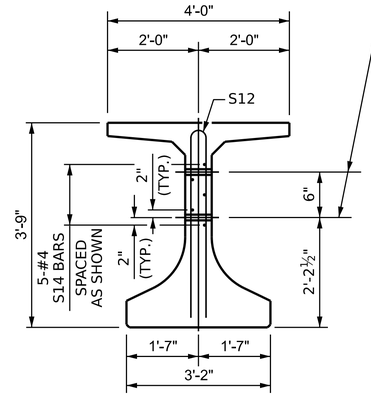

SECTION C-C

(S8, S9 AND S10 BARS NOT SHOWN)

DEBONDING LEGEND

- FULLY BONDED STRANDS

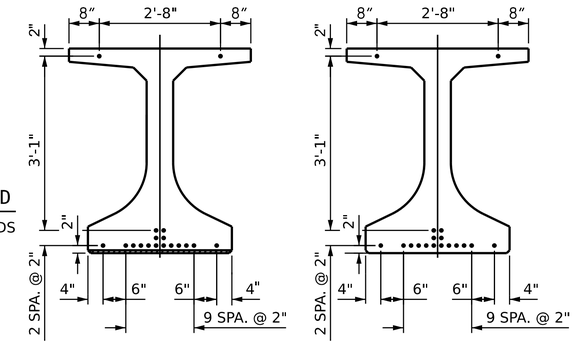

0.6" ∅ LOW RELAXATION STRAND LAYOUT

(18 STRANDS REQUIRED, ALL STRAIGHT, FULLY BONDED)

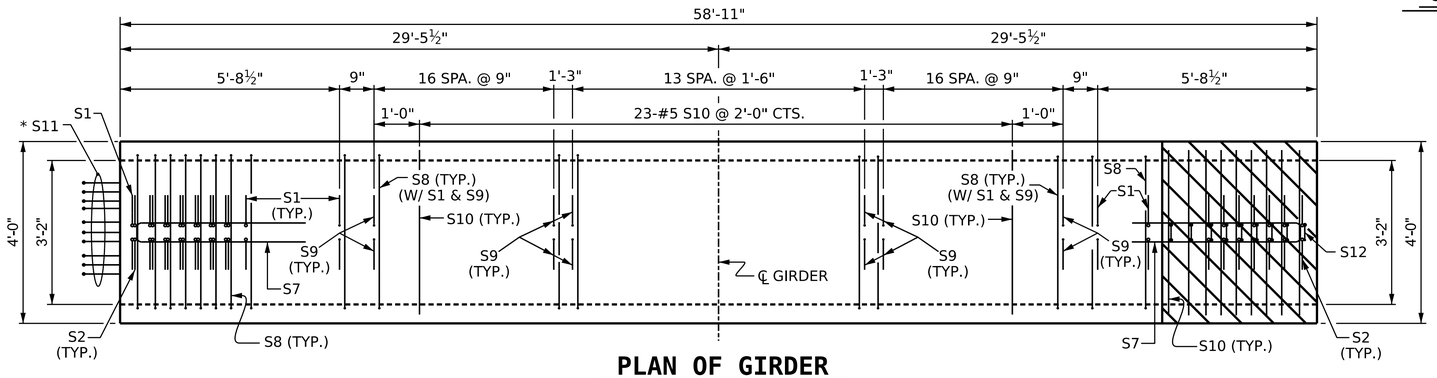

PLAN OF GIRDER

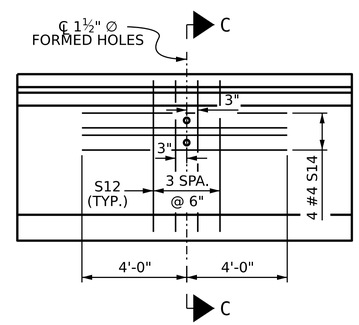

PARTIAL ELEVATION

SHOWING INTERMEDIATE STEEL DIAPHRAGM REINFORCING STEEL FOR ALL GIRDERS

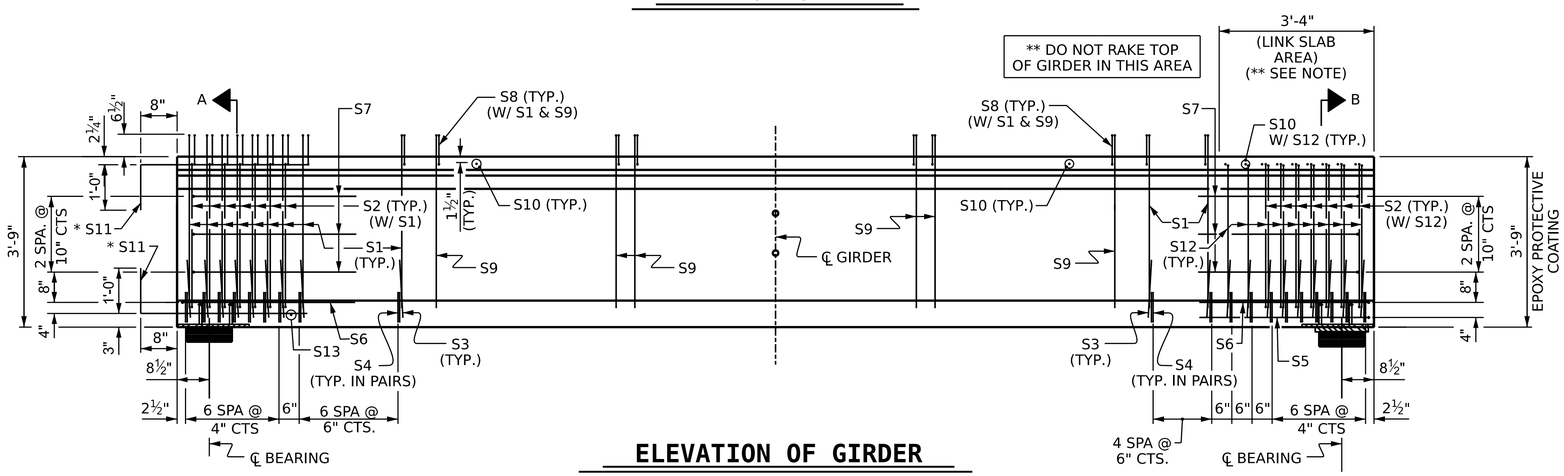

ELEVATION OF GIRDER

A

INTEGRAL END BENT

B

FIX. LINK SLAB

* NOTE:

S11 BARS SHALL BE BENT BEFORE SHIPMENT. HEAT BENDING SHALL NOT BE ALLOWED.

0.6"ø L.R. GRADE 270 STRANDS

AREA (SQUARE INCHES)	ULTIMATE STRENGTH (LBS. PER STRAND)	APPLIED PRESTRESS (LBS. PER STRAND)
0.217	58,600	43,950

REINFORCING STEEL FOR ONE GDR

BAR	NUMBER	SIZE	TYPE	LENGTH	WEIGHT
S1	38	#5	5	4'-7"	182
S2	28	#5	4	4'-7"	134
S3	28	#3	2	3'-4"	35
S4	56	#3	1	4'-3"	89
S5	1	#5	3	10'-9"	11
S6	2	#5	3	9'-9"	20
S7	6	#4	3	8'-5"	34
S8	134	#5	7	4'-8"	652
S9	96	#4	5	4'-7"	294
S10	32	#5	STR	3'-8"	122
* S11	20	#5	STR	4'-8"	97
S12	13	#5	6	7'-0"	95
S13	1	#3	STR	2'-10"	1
S14	5	#4	STR	8'-0"	27

BAR TYPES

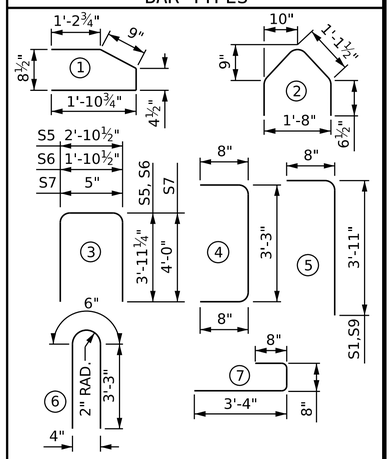

ALL BAR DIMENSIONS ARE OUT-TO-OUT

QUANTITIES FOR ONE GIRDER

REINFORCING STEEL	5000 PSI CONCRETE	0.6" ∅ L.R. STRANDS
1,793 LB.	13.2 C.Y.	18

GIRDERS REQUIRED

NUMBER	LENGTH	TOTAL LENGTH
5	58'-11"	294'-7"

PROJECT NO. BR-0090

NASH COUNTY

STATION: 16+54.00 -L-

SHEET 1 OF 5

STATE OF NORTH CAROLINA
DEPARTMENT OF TRANSPORTATION
RALEIGH

45" FIB PRESTRESSED CONCRETE GIRDER w/ INTEGRAL END BENT & LINK SLAB SPAN A

NORTH CAROLINA PROFESSIONAL SEAL 030024 ENGINEER ASTER G. ABRAHA

Aster Abraha
DD4094AED5104FD...
07/02/2025

DOCUMENT NOT CONSIDERED FINAL UNLESS ALL SIGNATURES COMPLETED

REVISIONS								SHEET NO.
NO.	BY:	DATE:	NO.	BY:	DATE:			S-13
1			3					TOTAL SHEETS
2			4					35

ASSEMBLED BY :	JGB / SWANcePE	DATE :	05/2023
CHECKED BY :	M. AHMED	DATE :	08/2023
DRAWN BY :	BNB		01/21
CHECKED BY :	AAI		09/22

7/2/2025
R:\Structures\Plans\401_025_BR0090_SMU_G1_S-13_600036.dgn
agbraha

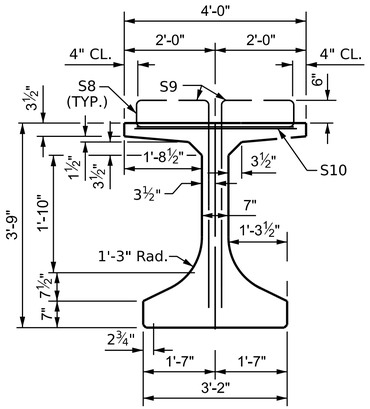

SECTION A-A

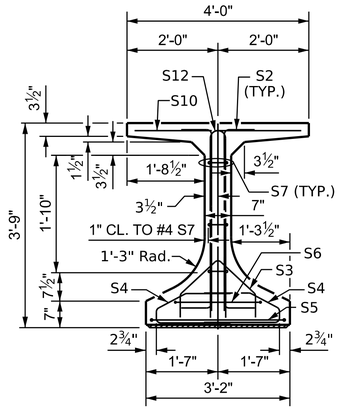

SECTION B-B

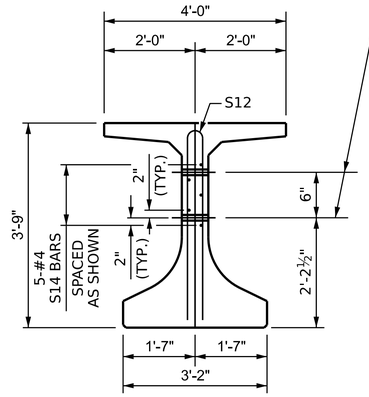

SECTION C-C

(S8, S9 AND S10 BARS NOT SHOWN)

℄ 1½" ∅ FORMED HOLE. (SEE FRAMING PLAN FOR LOCATION). FOR DIAPHRAGM DETAILS SEE "INTERMEDIATE STEEL DIAPHRAGMS FOR 45" FIB " DETAILS SHEET.

DEBONDING LEGEND

- • FULLY BONDED STRANDS
- ⊙ STRANDS DEBONDED FOR 8'-0" FROM END OF GIRDER
- ◈ STRANDS DEBONDED FOR 10'-0" FROM END OF GIRDER

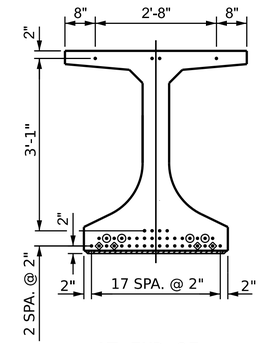

AT END OF GIRDER

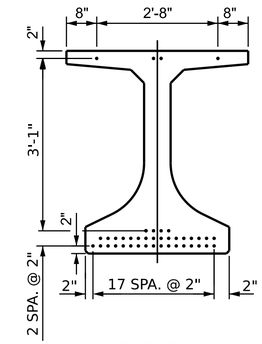

AT ℄ OF GIRDER

0.6" ∅ LOW RELAXATION STRAND LAYOUT

(42 STRANDS REQUIRED)

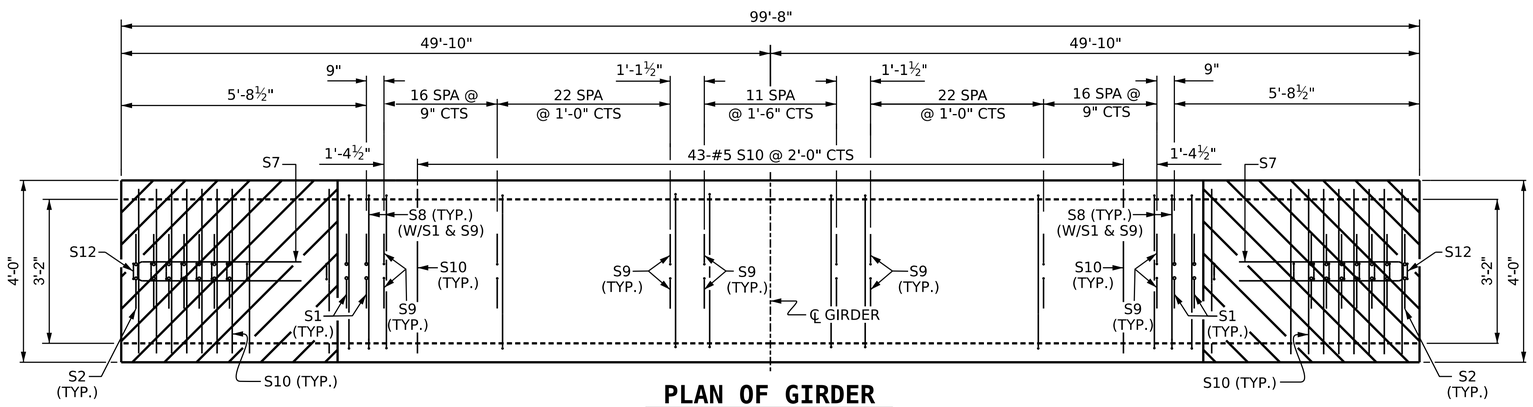

PLAN OF GIRDER

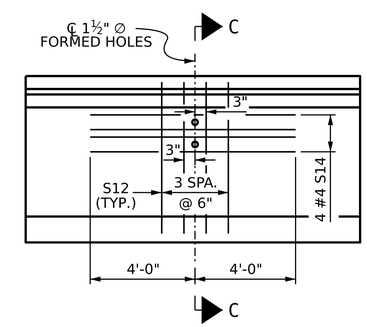

PARTIAL ELEVATION

SHOWING INTERMEDIATE STEEL DIAPHRAGM REINFORCING STEEL FOR ALL GIRDERS.

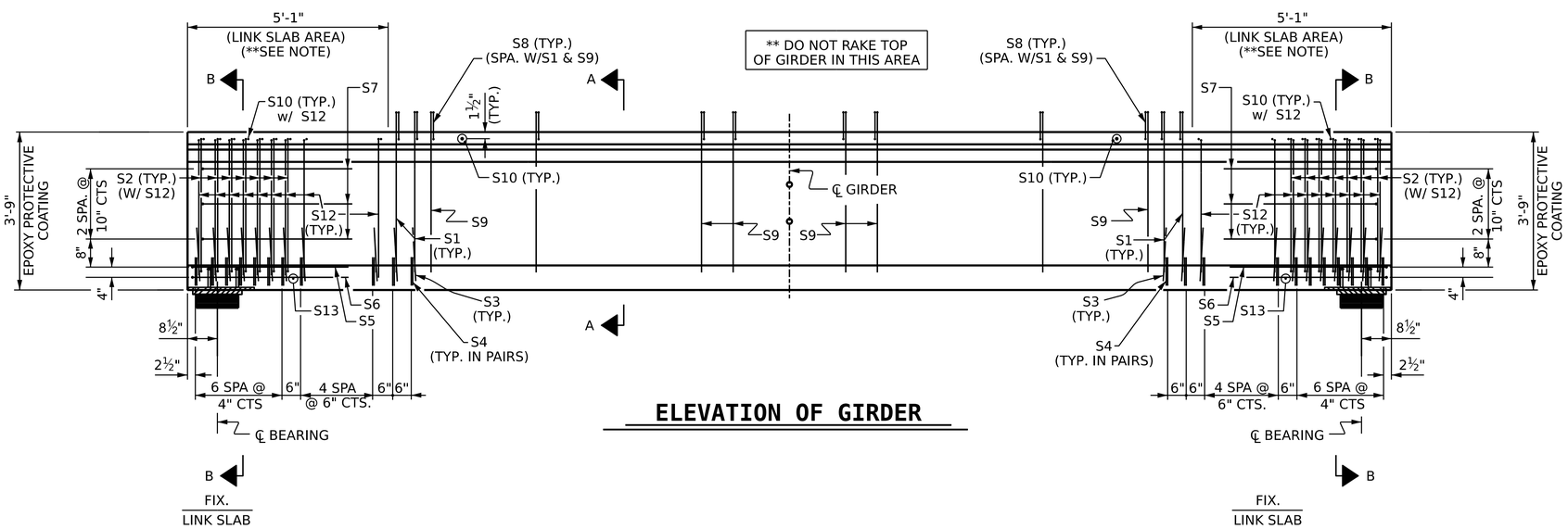

ELEVATION OF GIRDER

0.6"ø L.R. GRADE 270 STRANDS		
AREA (SQUARE INCHES)	ULTIMATE STRENGTH (LBS. PER STRAND)	APPLIED PRESTRESS (LBS. PER STRAND)
0.217	58,600	43,950

REINFORCING STEEL FOR ONE GDR

BAR	NUMBER	SIZE	TYPE	LENGTH	WEIGHT
S1	8	#5	5	4'-7"	38
S2	28	#5	4	4'-7"	134
S3	28	#3	2	3'-4"	35
S4	56	#3	1	4'-3"	89
S5	2	#5	3	10'-9"	22
S6	2	#5	3	9'-9"	20
S7	6	#4	3	8'-5"	34
S8	188	#5	7	4'-8"	915
S9	180	#4	5	4'-7"	551
S10	73	#5	STR	3'-8"	279
S12	28	#5	6	7'-0"	204
S13	2	#3	STR	2'-10"	2
S14	5	#4	STR	8'-0"	27

BAR TYPES

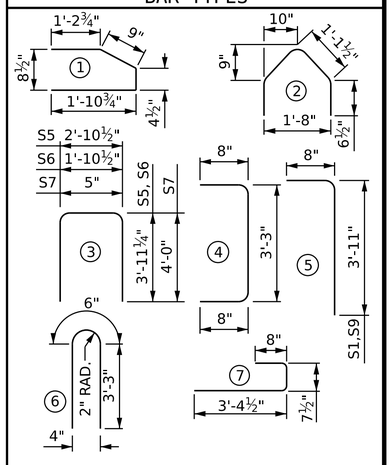

ALL BAR DIMENSIONS ARE OUT-TO-OUT

QUANTITIES FOR ONE GIRDER

REINFORCING STEEL	9,000 PSI CONCRETE	0.6" ∅ L.R. STRANDS
2,350 LB.	22.3 C.Y.	42

GIRDERS REQUIRED

NUMBER	LENGTH	TOTAL LENGTH
5	99'-8"	498'-4"

PROJECT NO. BR-0090

NASH COUNTY

STATION: 16+54.00 -L-

SHEET 2 OF 5

STATE OF NORTH CAROLINA
DEPARTMENT OF TRANSPORTATION
RALEIGH

45" FIB PRESTRESSED CONCRETE GIRDER w/ LINK SLABS SPAN B

NORTH CAROLINA PROFESSIONAL SEAL 030024 ENGINEER ASTER G. ABRAHA

Aster Abraha
06/26/2025

ASSEMBLED BY : JGB/SW/M.M.A	DATE : 02/25
CHECKED BY : M. AHMED/AGA	DATE : 02/25
DRAWN BY : BNB	01/21
CHECKED BY : AAI	09/22

DOCUMENT NOT CONSIDERED FINAL UNLESS ALL SIGNATURES COMPLETED

REVISIONS						
NO.	BY:	DATE:	NO.	BY:	DATE:	
1			3			
2			4			

SHEET NO. S-14

TOTAL SHEETS 35

6/24/2025
R:\Structures\Plans\401_027_BR0090_SMU_G2_S-14_600036.dgn
aabraha

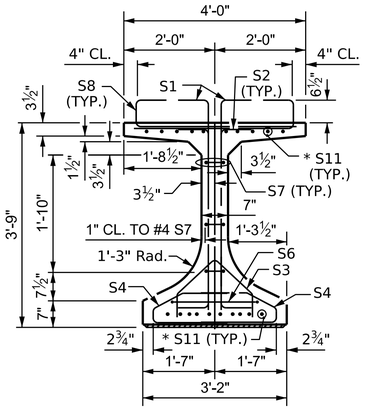

SECTION A-A

* FOR S11 BARS. SEE DETAIL "C" OF " 45" FIB PRESTRESSED CONCRETE GIRDER DETAILS" SHEET

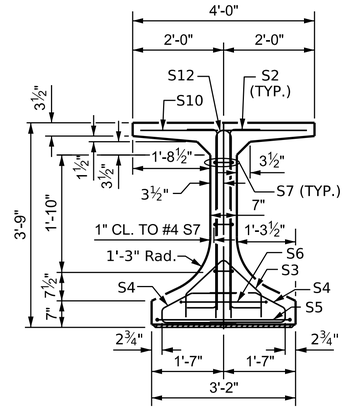

SECTION B-B

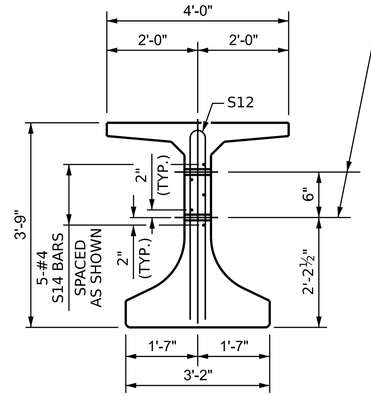

SECTION C-C

(S8, S9 AND S10 BARS NOT SHOWN)

DEBONDING LEGEND

- FULLY BONDED STRANDS

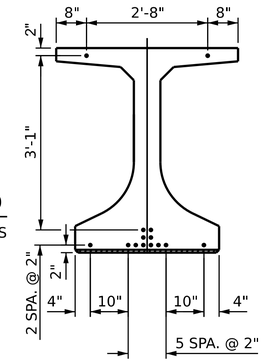

AT END OF GIRDER

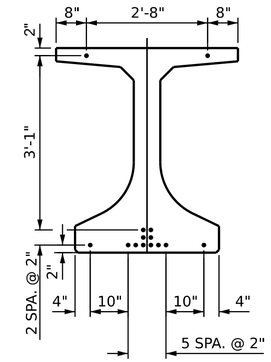

AT ℄ OF GIRDER

0.6" ∅ LOW RELAXATION STRAND LAYOUT

(14 STRANDS REQUIRED, ALL STRAIGHT, FULLY BONDED)

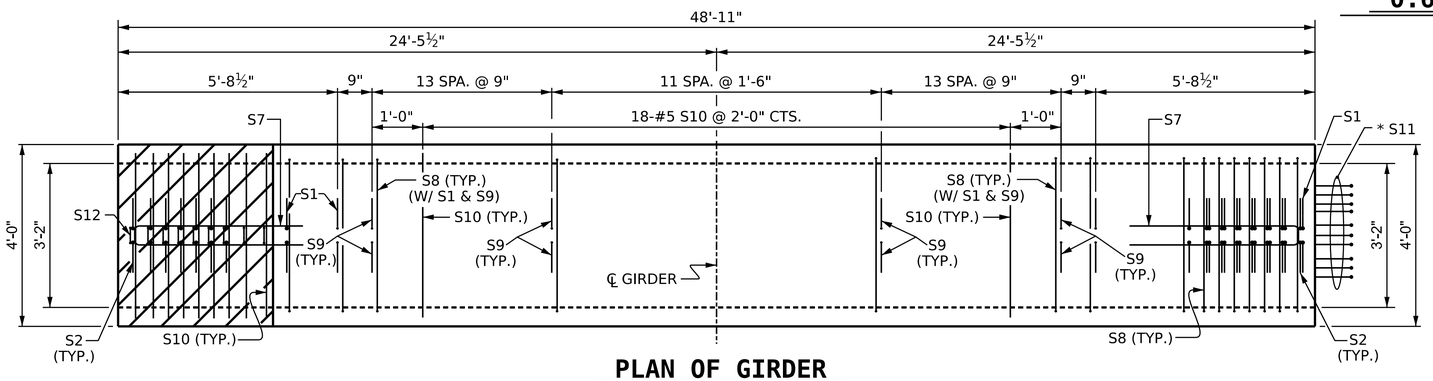

PLAN OF GIRDER

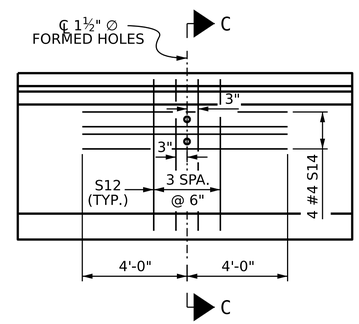

PARTIAL ELEVATION

SHOWING INTERMEDIATE STEEL DIAPHRAGM REINFORCING STEEL FOR ALL GIRDERS.

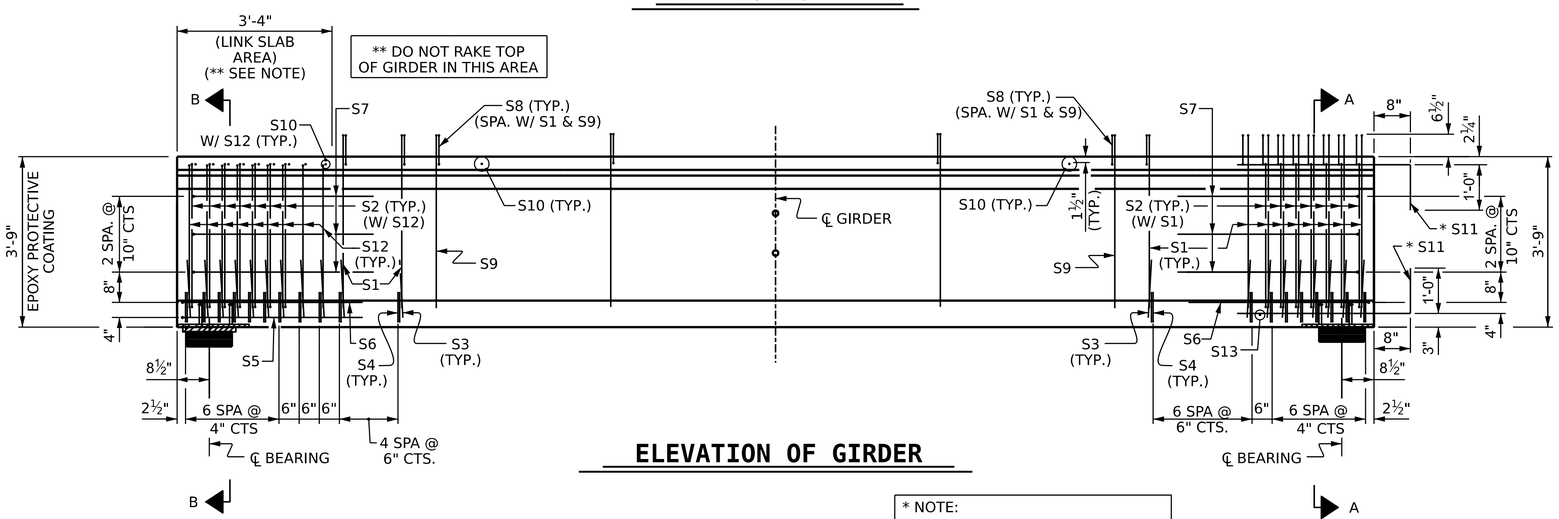

ELEVATION OF GIRDER

B

FIX. LINK SLAB

A

INTEGRAL END BENT

* NOTE:

S11 BARS SHALL BE BENT BEFORE SHIPMENT. HEAT BENDING SHALL NOT BE ALLOWED.

0.6"ø L.R. GRADE 270 STRANDS		
AREA (SQUARE INCHES)	ULTIMATE STRENGTH (LBS. PER STRAND)	APPLIED PRESTRESS (LBS. PER STRAND)
0.217	58,600	43,950

REINFORCING STEEL FOR ONE GDR

BAR	NUMBER	SIZE	TYPE	LENGTH	WEIGHT
S1	38	#5	5	4'-7"	182
S2	28	#5	4	4'-7"	134
S3	28	#3	2	3'-4"	35
S4	56	#3	1	4'-3"	89
S5	1	#5	3	10'-9"	11
S6	2	#5	3	9'-9"	20
S7	6	#4	3	8'-5"	34
S8	114	#5	7	4'-8"	555
S9	76	#4	5	4'-7"	233
S10	27	#5	STR	3'-8"	103
* S11	20	#5	STR	4'-8"	97
S12	13	#5	6	7'-0"	95
S13	1	#3	STR	2'-10"	1
S14	5	#4	STR	8'-0"	27

BAR TYPES

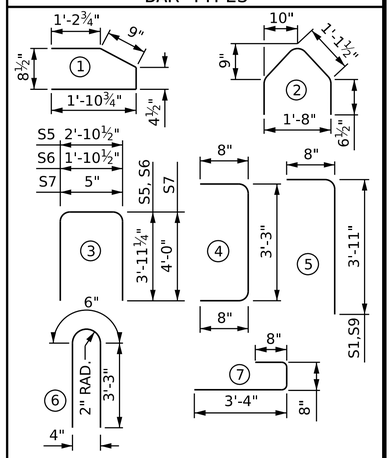

ALL BAR DIMENSIONS ARE OUT-TO-OUT

QUANTITIES FOR ONE GIRDER

REINFORCING STEEL	5000 PSI CONCRETE	0.6" ∅ L.R. STRANDS
1,616 LB.	11.0 C.Y.	14

GIRDERS REQUIRED

NUMBER	LENGTH	TOTAL LENGTH
5	48'-11"	244'-7"

PROJECT NO. BR-0090

NASH COUNTY

STATION: 16+54.00 -L-

SHEET 3 OF 5

STATE OF NORTH CAROLINA
DEPARTMENT OF TRANSPORTATION
RALEIGH

45" FIB PRESTRESSED CONCRETE GIRDER w/ LINK SLAB & INTEGRAL END BENT SPAN C

NORTH CAROLINA PROFESSIONAL SEAL 030024 ENGINEER ASTER G. ABRAHA

Aster Abraha
DDA094AED5104FD...
07/02/2025

DOCUMENT NOT CONSIDERED FINAL UNLESS ALL SIGNATURES COMPLETED

REVISIONS							SHEET NO.
NO.	BY:	DATE:	NO.	BY:	DATE:		S-15
1			3				TOTAL SHEETS
2			4				35

ASSEMBLED BY:	JGB / SWANcePE	DATE :	05/2023
CHECKED BY :	M. AHMED	DATE :	08/2023
DRAWN BY :	BNB		01/21
CHECKED BY :	AAI		09/22

7/2/2025
R:\Structures\Plans\401_029_BR0090_SMU_G3_S-15_600036.dgn
agbraha

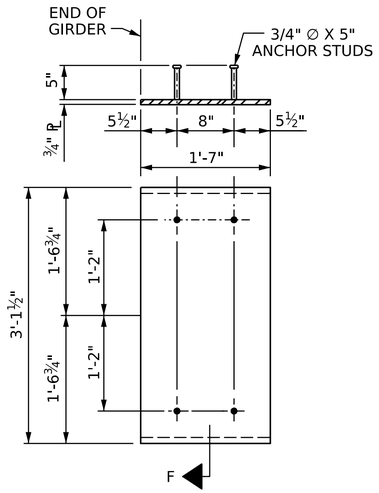

EMBEDDED PLATE "B-1" DETAILS FOR FLORIDA I BEAM

(2 REQ'D PER GIRDER)

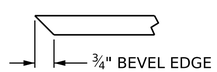

SECTION "F"

(SEE NOTES)

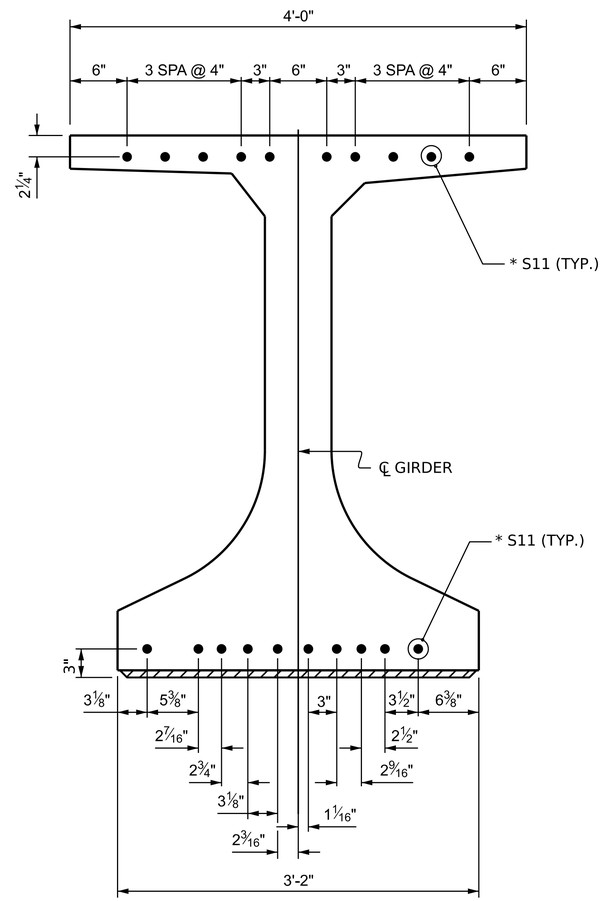

DETAIL "C"

(45" FLORIDA I BEAM)

NOTES

ALL PRESTRESSING STRANDS SHALL BE 7-WIRE LOW-RELAXATION GRADE 270 STRANDS AND SHALL CONFORM TO AASHTO M203 EXCEPT FOR SAMPLING REQUIREMENTS WHICH SHALL BE IN ACCORDANCE WITH THE STANDARD SPECIFICATIONS.

ALL REINFORCING STEEL SHALL BE GRADE 60.

APPLY EPOXY PROTECTIVE COATING TO END OF GIRDER SURFACES AS INDICATED IN ELEVATION VIEWS.

EMBEDDED PLATE "B-1" SHALL BE GALVANIZED IN ACCORDANCE WITH THE STANDARD SPECIFICATIONS.

ANCHOR STUDS SHALL CONFORM TO AASHTO M169 GRADES 1010 THROUGH 1020 OR APPROVED EQUAL, AND SHALL MEET THE TYPE "B" REQUIREMENTS OF SUB SECTION 7.3 OF THE ANSI/AASHTO/AWS D1.5 BRIDGE WELDING CODE.

AT ENDS OF GIRDERS TO BE EMBEDDED IN CONCRETE DIAPHRAGMS OR END WALLS, PRESTRESSING STRANDS MAY EXTEND A MAXIMUM OF 2" BEYOND THE GIRDER ENDS. OTHERWISE, PRESTRESSING STRANDS SHALL BE CUT FLUSH WITH THE GIRDER ENDS.

THE TRANSFER OF LOAD FROM THE ANCHORAGES TO THE GIRDER SHALL BE DONE WHEN CONCRETE HAS REACHED A COMPRESSIVE STRENGTH OF NOT LESS THAN 4000 PSI FOR SPANS A AND C, AND NOT LESS THAN 7000 PSI FOR SPAN B.

DEPENDING ON THE TYPE OF SYSTEM USED TO SUPPORT THE DECK SLAB FORMS, PRESET ANCHORS MAY BE NECESSARY IN THE PRESTRESSED CONCRETE GIRDER.

THE TOP SURFACE OF THE GIRDER, EXCLUDING THE OUTSIDE 4" AND LINK SLAB AREAS, SHALL BE RAKED TO A DEPTH OF ¼".

WHEN DRAPED STRANDS ARE DETAILED, THE LONGITUDINAL LOCATION OF THE HOLD DOWN DEVICES SHALL BE WITHIN 6" OF THE LOCATION SHOWN AND THE CENTER OF GRAVITY OF THE GROUP OF DRAPED STRANDS SHALL BE LOCATED WITHIN ½" OF THE THEORETICAL LOCATION SHOWN.

THE CONTRACTOR HAS THE OPTION TO PROVIDE, AT NO ADDITIONAL COST TO THE DEPARTMENT, 2 ADDITIONAL STRANDS AT THE TOP OF THE GIRDER TO FACILITATE TYING OF THE REINFORCING STEEL. THESE STRANDS SHALL BE PULLED TO A LOAD OF 4500 lbs.

PROJECT NO. BR-0090

NASH COUNTY

STATION: 16+54.00 -L-

SHEET 4 OF 5

STATE OF NORTH CAROLINA
DEPARTMENT OF TRANSPORTATION
RALEIGH

NORTH CAROLINA PROFESSIONAL SEAL 030024 ENGINEER ASTER G. ABRAHA

Aster Abraha
DDA094AED5104FD...
06/26/2025

45" FIB PRESTRESSED CONCRETE GIRDER DETAILS

ASSEMBLED BY : SWANcePE	DATE : 08/2023
CHECKED BY : A. ABRAHA	DATE : 02/2025
DRAWN BY : BNB 05/21	
CHECKED BY : AAI 10/21	

DOCUMENT NOT CONSIDERED FINAL UNLESS ALL SIGNATURES COMPLETED

REVISIONS								SHEET NO.
NO.	BY:	DATE:	NO.	BY:	DATE:			S-16
1			3					TOTAL SHEETS
2			4					35

6/25/2025
R:\Structures\Plans\401_031_BR0090_SMU_G4_S-16_600036.dgn
aabraha

STD. NO. FIB SHT. 1

DEAD LOAD DEFLECTION TABLE FOR GIRDERS

SPAN A

0.6″ Ø LOW RELAXATION	ALL GIRDERS																				
TWENTIETH POINTS	0	.05	.1	.15	.2	.25	.3	.35	.4	.45	.5	.55	.6	.65	.7	.75	.8	.85	.9	.95	0
CAMBER (GIRDER ALONE IN PLACE) ↑	0	0.009	0.019	0.026	0.032	0.037	0.041	0.044	0.047	0.047	0.048	0.047	0.047	0.044	0.041	0.037	0.032	0.026	0.019	0.009	0
✳ DEFLECTION DUE TO SUPERIMPOSED D.L. ↓	0	0.004	0.007	0.010	0.013	0.016	0.018	0.020	0.021	0.022	0.022	0.022	0.021	0.020	0.018	0.016	0.013	0.010	0.007	0.004	0
FINAL CAMBER ↑	0	1/16″	1/8″	3/16″	1/4″	1/4″	1/4″	5/16″	5/16″	5/16″	5/16″	5/16″	5/16″	5/16″	1/4″	1/4″	1/4″	3/16″	1/8″	1/16″	0

SPAN B

0.6″ Ø LOW RELAXATION	ALL GIRDERS																				
TWENTIETH POINTS	0	.05	.1	.15	.2	.25	.3	.35	.4	.45	.5	.55	.6	.65	.7	.75	.8	.85	.9	.95	0
CAMBER (GIRDER ALONE IN PLACE) ↑	0	.035	.070	0.101	0.132	0.156	0.180	0.196	0.211	0.216	0.222	0.216	0.211	0.196	0.180	0.156	0.132	0.101	.070	.035	0
✳ DEFLECTION DUE TO SUPERIMPOSED D.L. ↓	0	0.025	0.051	0.073	0.096	0.114	0.131	0.143	0.154	0.158	0.162	0.158	0.154	0.143	0.131	0.114	0.096	0.073	0.051	0.025	0
FINAL CAMBER ↑	0	1/8″	1/4″	5/16″	7/16″	1/2″	9/16″	5/8″	11/16″	11/16″	3/4″	11/16″	11/16″	5/8″	9/16″	1/2″	7/16″	5/16″	1/4″	1/8″	0

SPAN C

0.6″ Ø LOW RELAXATION	ALL GIRDERS																				
TWENTIETH POINTS	0	.05	.1	.15	.2	.25	.3	.35	.4	.45	.5	.55	.6	.65	.7	.75	.8	.85	.9	.95	0
CAMBER (GIRDER ALONE IN PLACE) ↑	0	0.005	0.009	0.012	0.016	0.018	0.020	0.021	0.022	0.023	0.023	0.023	0.022	0.021	0.020	0.018	0.016	0.012	0.009	0.005	0
✳ DEFLECTION DUE TO SUPERIMPOSED D.L. ↓	0	0.002	0.003	0.005	0.006	0.007	0.009	0.009	0.010	0.010	0.011	0.010	0.010	0.009	0.009	0.007	0.006	0.005	0.003	0.002	0
FINAL CAMBER ↑	0	1/16″	1/16″	1/16″	1/8″	1/8″	1/8″	1/8″	1/8″	1/8″	1/8″	1/8″	1/8″	1/8″	1/8″	1/8″	1/8″	1/16″	1/16″	1/16″	0

• INCLUDES FUTURE WEARING SURFACE
ALL VALUES ARE SHOWN IN FEET (DECIMAL FORM), EXCEPT "FINAL CAMBER", WHICH IS GIVEN IN INCHES (FRACTION FORM).

PROJECT NO. BR-0090
NASH COUNTY
STATION: 16+54.00 -L-

SHEET 5 OF 5

STATE OF NORTH CAROLINA
DEPARTMENT OF TRANSPORTATION
RALEIGH

SUPERSTRUCTURE

DEFLECTION TABLE

NORTH CAROLINA PROFESSIONAL SEAL 030024 ENGINEER ASTER G. ABRAHA
DocuSigned by: Aster Abraha
DD4009A4ED0104FD...
06/26/2025

DOCUMENT NOT CONSIDERED FINAL UNLESS ALL SIGNATURES COMPLETED

REVISIONS						SHEET NO.
NO.	BY:	DATE:	NO.	BY:	DATE:	S-17
1			3			TOTAL SHEETS
2			4			35

ASSEMBLED BY : SWANcePE DATE : 08/2023
CHECKED BY : M. M. AHMED DATE : 01/2025
DESIGN ENGINEER OF RECORD : M. M. AHMED DATE : 01/2025

DRAWN BY : ELR 8/91
CHECKED BY : GRP 8/91

REV. 10/1/11 MAA/GM
REV. 1/15 MAA/TMG
REV. 12/17 MAA/THC

STD. NO. PCG9

6/26/2025
R:\Structures\Plans\401_033_BR0090_SMU_G5_S-17_600036.dgn
aabraha

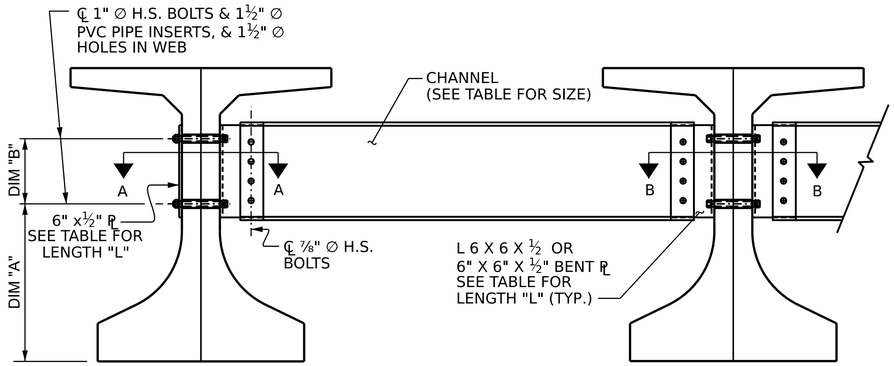

PART SECTION AT INTERMEDIATE DIAPHRAGM

(45" FIB)

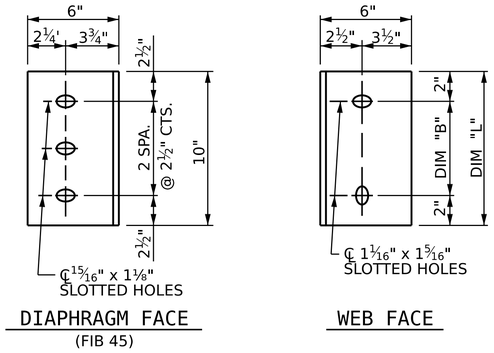

CONNECTOR PLATE DETAILS

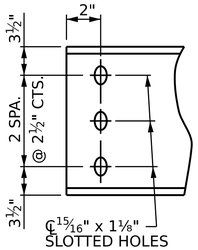

CHANNEL END

(FIB 45")

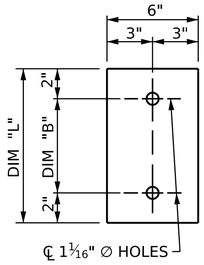

PLATE DETAILS

STRUCTURAL STEEL NOTES

ALL INTERMEDIATE DIAPHRAGM STEEL AND CONNECTOR PLATES SHALL BE AASHTO M270 GRADE 50 OR APPROVED EQUAL.

TENSION ON THE ASTM A325 BOLTS THROUGH THE ANGLE MEMBER SHALL BE CALIBRATED USING DIRECT TENSION INDICATOR WASHERS IN ACCORDANCE WITH THE STANDARD SPECIFICATIONS.

TENSION ON THE ASTM A449 BOLTS THROUGH THE GIRDER WEB SHALL BE SNUG TIGHTENED FOLLOWED BY AN ADDITIONAL ¼ TURN.

THE PLATES, BENT PLATES, AND ANGLES SHALL BE GALVANIZED OR METALLIZED IN ACCORDANCE WITH THE STANDARD SPECIFICATIONS. FOR THERMAL SPRAYED COATINGS (METALLIZATION), SEE SPECIAL PROVISIONS.

FOR METALLIZATION, APPLY A THERMAL SPRAYED COATING WITH A SEAL COAT TO ALL STEEL DIAPHRAGM SURFACES IN ACCORDANCE WITH THE DEPARTMENTS THERMAL SPRAYED COATINGS (METALLIZATION) PROGRAM, THERMAL SPRAYED COATINGS SPECIAL PROVISION AND SECTION 442 OF THE STANDARD SPECIFICATIONS.

GALVANIZE THE HIGH STRENGTH BOLTS, NUTS, WASHERS AND DIRECT TENSION INDICATORS IN ACCORDANCE WITH THE STANDARD SPECIFICATIONS.

USE AN ASTM F436 HARDENED WASHER WITH STANDARD AND SLOTTED HOLES UNDER EACH BOLT HEAD AND NUT.

FOR BOLTS THROUGH THE GIRDER WEB, PROVIDE SUFFICIENT LENGTH OF THREADS ON ALL BOLTS TO ACCOMMODATE WASHERS AND THE THICKNESS OF CONNECTING MEMBER PLUS AT LEAST ¼" PROJECTION BEYOND THE NUT.

INTERMEDIATE DIAPHRAGM ASSEMBLY SHALL COMPLY WITH SECTION 1072 OF THE STANDARD SPECIFICATIONS.

SUBMIT TWO SETS OF WORKING DRAWINGS FOR THE INTERMEDIATE DIAPHRAGM ASSEMBLY FOR REVIEW, COMMENTS AND ACCEPTANCE. AFTER REVIEW, COMMENTS, AND ACCEPTANCE, SUBMIT SEVEN SETS FOR DISTRIBUTION.

IN THE EXTERIOR BAYS, PLACE TEMPORARY STRUTS BETWEEN PRESTRESSED GIRDERS ADJACENT TO THE STEEL DIAPHRAGMS. STRUTS SHALL REMAIN IN PLACE 3 DAYS AFTER CONCRETE IS PLACED.

THE COST OF THE STEEL DIAPHRAGMS AND ASSEMBLIES SHALL BE INCLUDED IN THE UNIT PRICE BID FOR PRESTRESSED CONCRETE GIRDERS.

TABLE

GIRDER TYPE	CHANNEL SIZE	DIM "A"	DIM "B"	DIM "L"
45" FIB	MC 12 x 31	2'-2½"	6"	10"

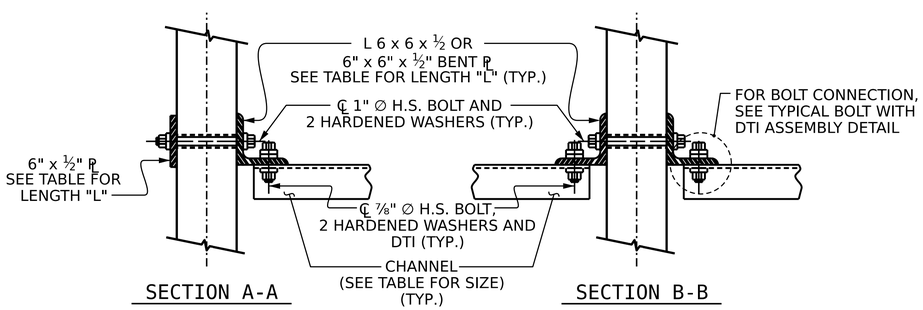

CONNECTION DETAILS

(FOR SKEW = 90°)

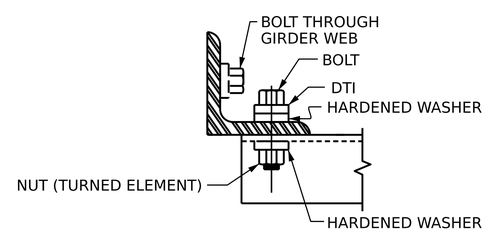

BOLT WITH DTI ASSEMBLY DETAIL

PROJECT NO. BR-0090

NASH COUNTY

STATION: 16+54.00 -L-

NORTH CAROLINA PROFESSIONAL SEAL 030024 ENGINEER ASTER G. ABRAHA

DDA094AED5104FD...
06/26/2025

STATE OF NORTH CAROLINA
DEPARTMENT OF TRANSPORTATION
RALEIGH

STANDARD

INTERMEDIATE STEEL DIAPHRAGMS FOR 45" FIB

ASSEMBLED BY : SWANcePE	DATE : 08/2023
CHECKED BY : M. M. AHMED	DATE : 02/2025
DRAWN BY : BNB 01/21	REV. --/--
CHECKED BY : AAI 01/21	REV. --/--

DOCUMENT NOT CONSIDERED FINAL UNLESS ALL SIGNATURES COMPLETED

REVISIONS						
NO.	BY:	DATE:	NO.	BY:	DATE:	
1			3			
2			4			

SHEET NO. S-18

TOTAL SHEETS 35

STD. NO. FIB45/54

4/14/2025
R:\Structures\Plans\401_035_BR0090_SMU_G6_S-18_600036.dgn
aabraha

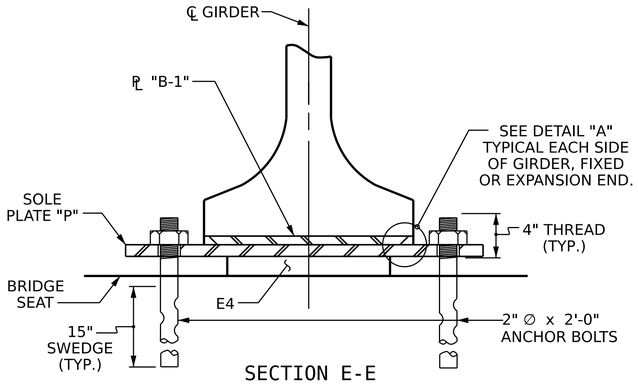

SECTION E-E

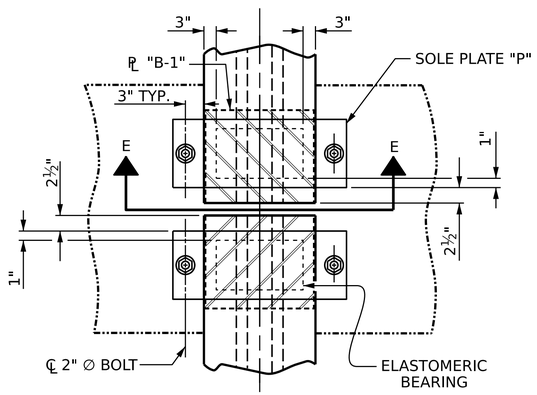

TYPICAL PLAN
(SHOWING CONTINUOUS BENT)

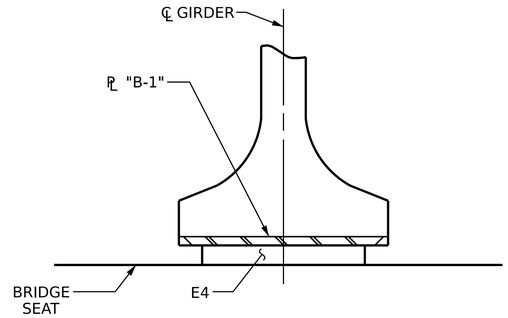

SECTION E-E

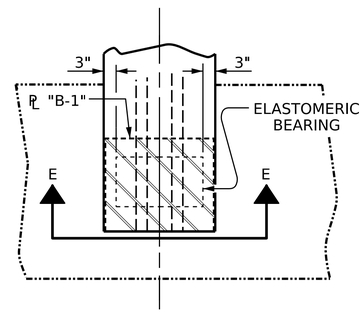

TYPICAL PLAN OF INTEGRAL END BENT

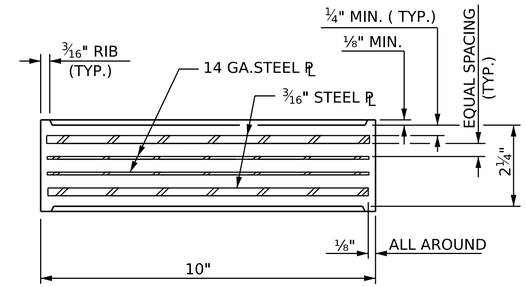

TYPICAL SECTION OF ELASTOMERIC BEARINGS

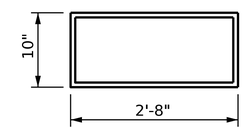

PLAN VIEW OF ELASTOMERIC BEARING
E4 (30 REQ'D)

NOTES

AT ALL FIXED POINTS OF SUPPORT, NUTS FOR ANCHOR BOLTS ARE TO BE TIGHTENED FINGER TIGHT AND THEN BACKED OFF ½ TURN. THE THREAD OF THE NUT AND BOLT SHALL THEN BE BURRED WITH A SHARP POINTED TOOL.

STEEL SOLE PLATES, ANCHOR BOLTS, NUTS, AND WASHERS SHALL BE GALVANIZED IN ACCORDANCE WITH THE STANDARD SPECIFICATIONS.

PRIOR TO WELDING, GRIND THE GALVANIZED SURFACE OF THE PORTION OF THE EMBEDDED PLATE AND SOLE PLATE THAT ARE TO BE WELDED. AFTER WELDING, DAMAGED GALVANIZED SURFACES SHALL BE REPAIRED IN ACCORDANCE WITH THE STANDARD SPECIFICATIONS.

WHEN WELDING THE SOLE PLATE TO THE EMBEDDED PLATE IN THE GIRDER, USE TEMPERATURE INDICATING WAX PENS, OR OTHER SUITABLE MEANS, TO ENSURE THAT THE TEMPERATURE OF THE SOLE PLATE DOES NOT EXCEED 300°F. TEMPERATURES ABOVE THIS MAY DAMAGE THE ELASTOMER.

SOLE PLATE "P", BOLTS, NUTS, WASHERS, AND PIPE SLEEVE SHALL BE INCLUDED IN THE PAY ITEM FOR PRESTRESSED CONCRETE GIRDERS.

ANCHOR BOLTS SHALL MEET THE REQUIREMENTS OF ASTM A449. NUTS SHALL MEET THE REQUIREMENTS OF AASHTO M291-DH OR AASHTO M292-2H. WASHERS SHALL MEET THE REQUIREMENTS OF AASHTO M293. SHOP DRAWINGS ARE NOT REQUIRED FOR ANCHOR BOLT, NUTS AND WASHERS. SHOP INSPECTION IS REQUIRED.

ALL SURFACES OF BEARING PLATES SHALL BE SMOOTH AND STRAIGHT.

THE ELASTOMER IN THE STEEL REINFORCED BEARINGS SHALL HAVE A SHEAR MODULUS OF 0.160 KSI, IN ACCORDANCE WITH AASHTO M251.

FOR STEEL REINFORCED ELASTOMERIC BEARINGS, SEE STANDARD SPECIFICATIONS.

ALL SOLE PLATES SHALL BE AASHTO M270 GRADE 36.

MAXIMUM ALLOWABLE SERVICE LOADS	
D.L.+L.L. (NO IMPACT)	
E4 PAD	365 k

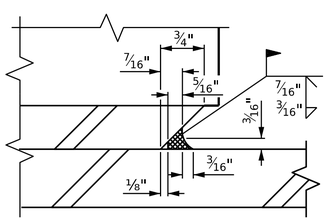

DETAIL "A"

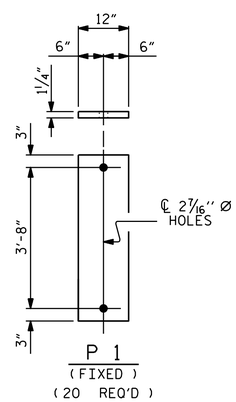

SOLE PLATE DETAILS

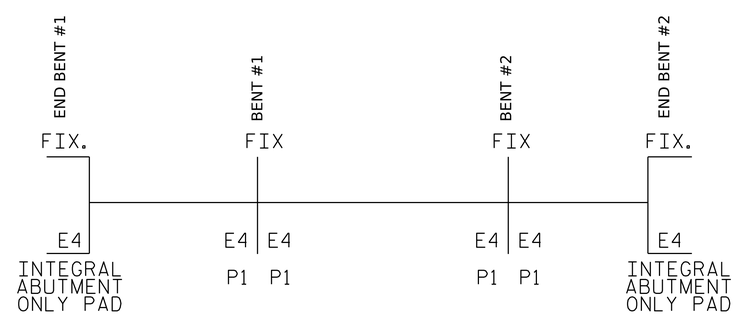

SOLE PLATE LOCATION SKETCH

PROJECT NO. BR-0090
NASH COUNTY
STATION: 16+54.00 -L-

STATE OF NORTH CAROLINA
DEPARTMENT OF TRANSPORTATION
RALEIGH

ELASTOMERIC BEARING DETAILS

FIB PRESTRESSED CONCRETE GIRDER SUPERSTRUCTURE

NORTH CAROLINA PROFESSIONAL SEAL 030024 ENGINEER ASTER G. ABRAHA
Aster Abraha
DDA094AED5104FD...
06/26/2023

DOCUMENT NOT CONSIDERED FINAL UNLESS ALL SIGNATURES COMPLETED

REVISIONS								SHEET NO.
NO.	BY:	DATE:	NO.	BY:	DATE:			S-19
1			3					TOTAL SHEETS
2			4					35

ASSEMBLED BY : SWANcePE DATE : 08/2023
CHECKED BY : A. ABRAHA P.E. DATE : 04/2025

6/24/2025
R:\Structures\Plans\401_037_BR0090_SMU_BG_S-19_600036.dgn
aabraha

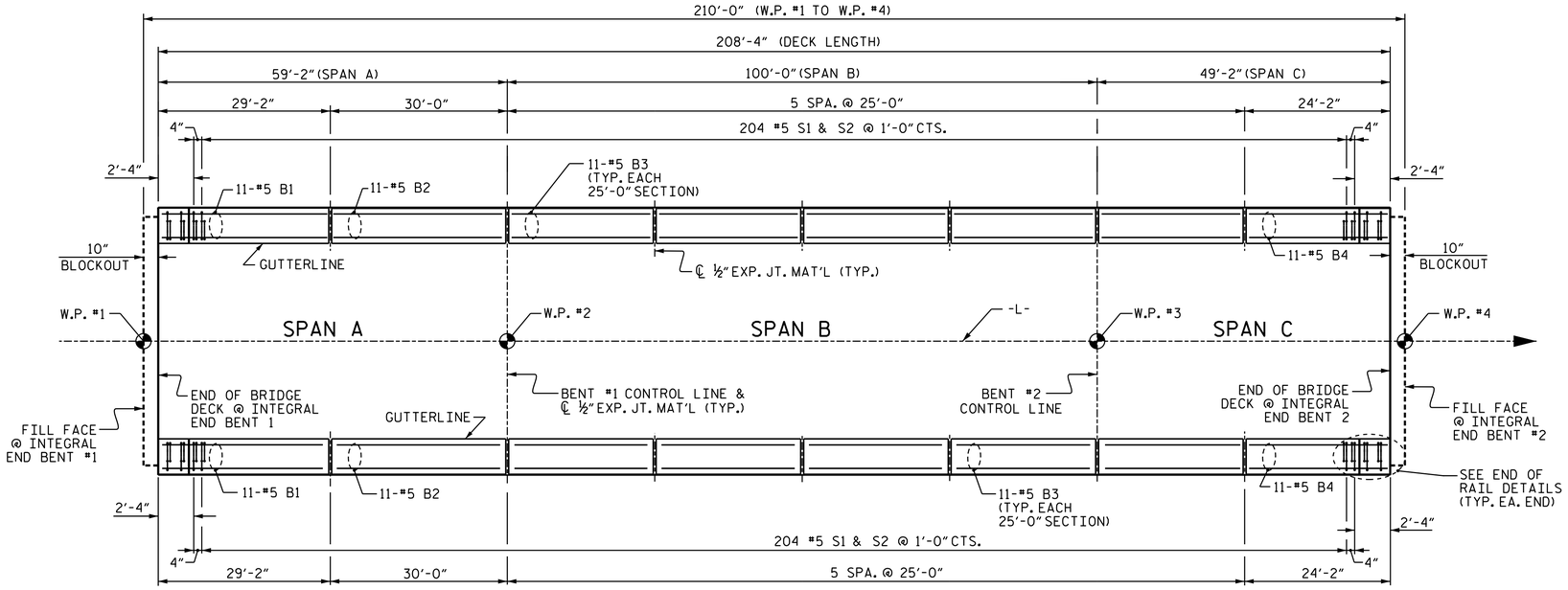

PLAN OF CONCRETE BARRIER RAIL

BAR TYPES

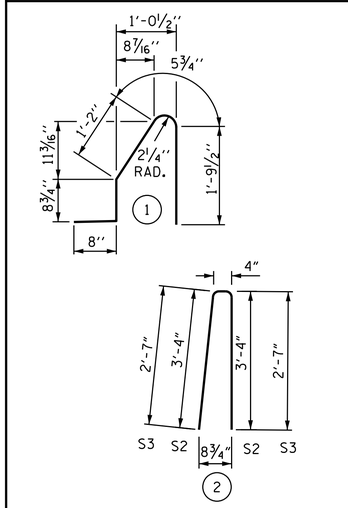

ALL BAR DIMENSIONS ARE OUT TO OUT

BILL OF MATERIAL

FOR CONCRETE BARRIER RAIL ONLY

BAR	NO.	SIZE	TYPE	LENGTH	WEIGHT
* B1	22	#5	STR	28'-9"	660
* B2	22	#5	STR	29'-7"	679
* B3	110	#5	STR	24'-7"	2,820
* B4	22	#5	STR	23'-9"	545
* S1	420	#5	1	4'-10"	2,117
* S2	412	#5	2	7'-0"	3,008
* S3	8	#5	2	5'-6"	46

* EPOXY COATED

REINFORCING STEEL	9,875 LBS.
CLASS AA CONCRETE	56.7 CU. YDS.
CONCRETE BARRIER RAIL	416.67 LIN. FT.

NOTES

THE BARRIER RAIL IN A CONTINUOUS UNIT SHALL NOT BE CAST UNTIL ALL SLAB CONCRETE IN THAT UNIT HAS BEEN CAST AND HAS REACHED A MINIMUM COMPRESSIVE STRENGTH OF 3,000 PSI.

ALL REINFORCING STEEL IN BARRIER RAILS SHALL BE EPOXY COATED.

GROOVED CONTRACTION JOINTS, ½" IN DEPTH, SHALL BE TOOLED IN ALL EXPOSED FACES OF THE BARRIER RAIL AND IN ACCORDANCE WITH ARTICLE 825-10(B) OF THE STANDARD SPECIFICATIONS. THE CONTRACTION JOINT SHALL BE LOCATED AT EACH THIRD POINT BETWEEN BARRIER RAIL EXPANSION JOINTS. ONLY ONE CONTRACTION JOINT IS REQUIRED AT MIDPOINT OF BARRIER RAIL SEGMENTS LESS THAN 20 FEET IN LENGTH AND NO CONTRACTION JOINTS ARE REQUIRED FOR THOSE SEGMENTS LESS THAN 10 FEET IN LENGTH.

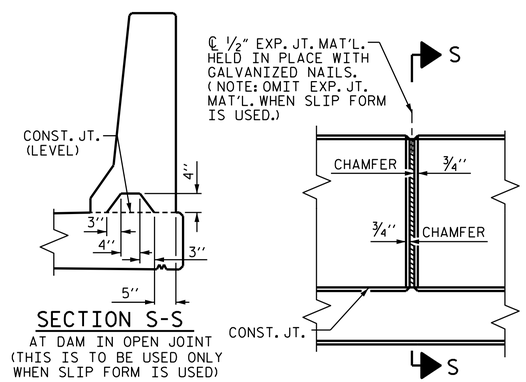

SECTION S-S
AT DAM IN OPEN JOINT
(THIS IS TO BE USED ONLY WHEN SLIP FORM IS USED)

ELEVATION AT EXPANSION JOINTS

BARRIER RAIL DETAILS

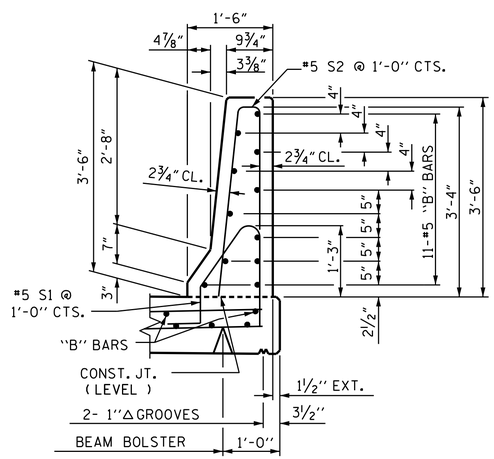

SECTION THRU RAIL

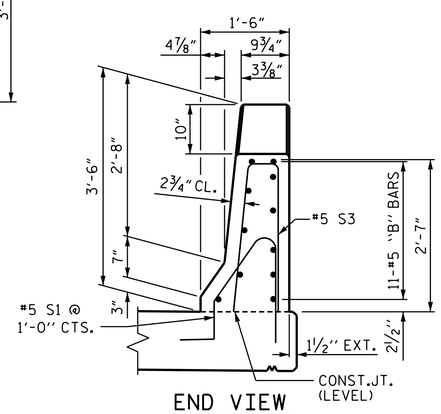

END VIEW

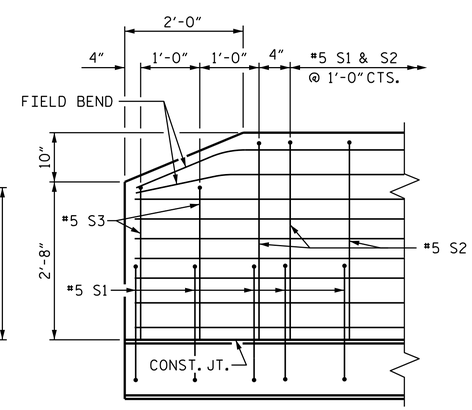

SIDE VIEW

END OF RAIL DETAILS

PROJECT NO. BR-0090

NASH COUNTY

STATION: 16+54.00 -L-

SHEET 1 OF 2

STATE OF NORTH CAROLINA
DEPARTMENT OF TRANSPORTATION
RALEIGH

CONCRETE BARRIER RAIL

NORTH CAROLINA PROFESSIONAL SEAL 030024 ENGINEER ASTER G. ABRAHA

Aster Abraha
DocuSigned by: 7D6D9A6D2E104FD...
06/26/2025

DOCUMENT NOT CONSIDERED FINAL UNLESS ALL SIGNATURES COMPLETED

REVISIONS						
NO.	BY:	DATE:	NO.	BY:	DATE:	
1			3			
2			4			

SHEET NO. S-20

TOTAL SHEETS 35

ASSEMBLED BY :	S. WANCE	DATE :	01/2023
CHECKED BY :	M. AHMED	DATE :	02/2025
DRAWN BY : ARB 5/87	REV. 7/12		MAA/GM
CHECKED BY : SJD 9/87	REV. 6/13		MAA/GM
	REV. 12/17		MAA/THC

5/8/2025
R:\Structures\Plans\401_039_BR0090_SMU_BR_S-20_630036.dgn
aabraha

STD. NO. CBR1 (SHT 1)

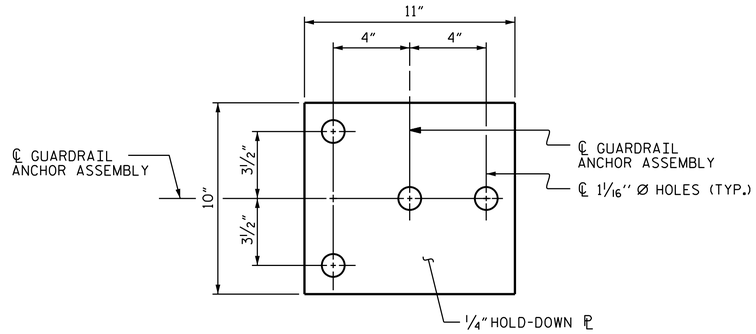

PLAN

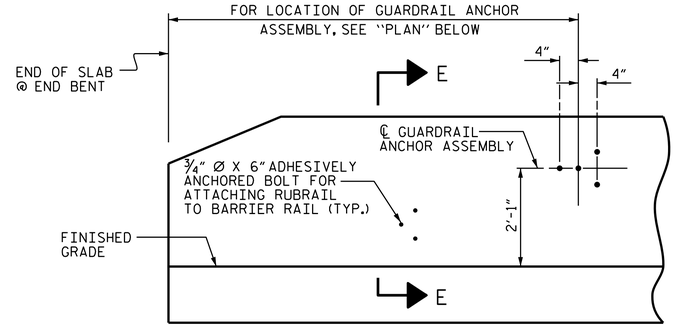

ELEVATION

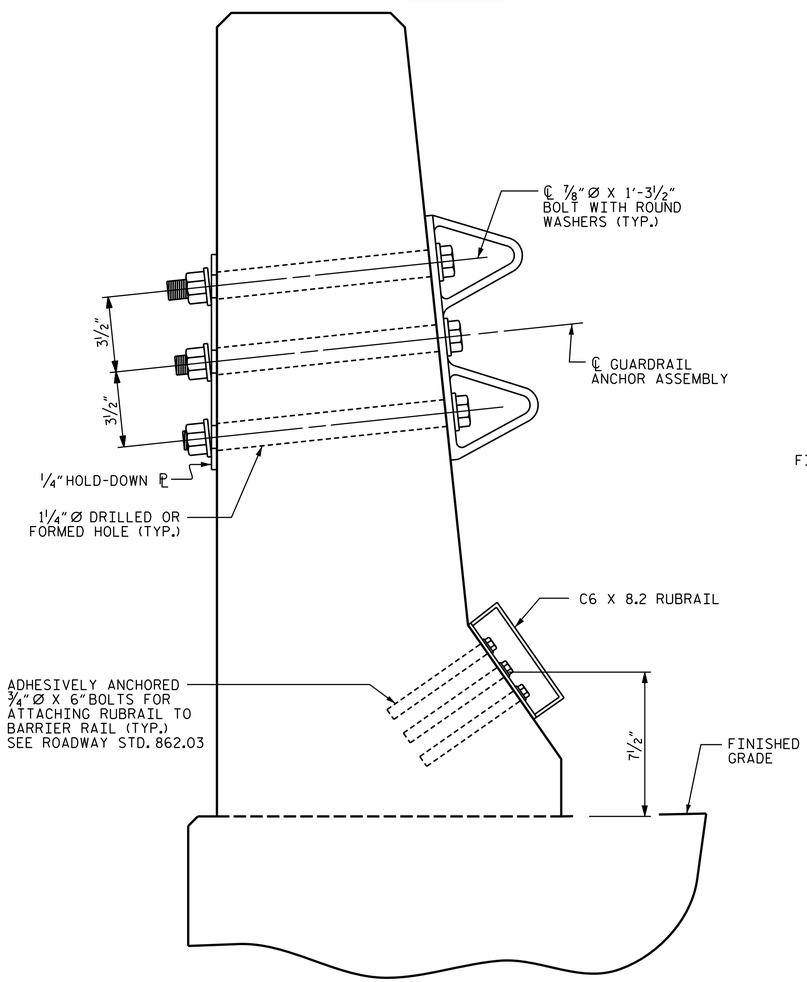

SECTION E-E

GUARDRAIL ANCHOR ASSEMBLY DETAILS

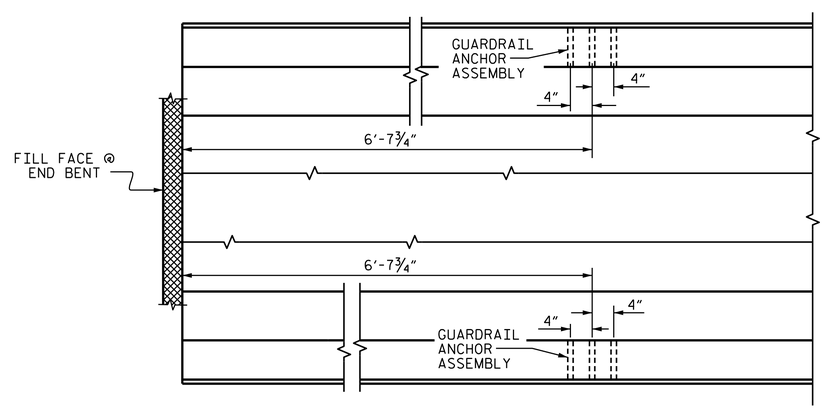

PLAN

LOCATION OF ANCHORS FOR GUARDRAIL

END BENT #1 SHOWN, END BENT #2 SIMILAR.

NOTES

THE GUARDRAIL ANCHOR ASSEMBLY SHALL CONSIST OF A 1/4" HOLD-DOWN PLATE AND 4 - 7/8" Ø BOLTS WITH NUTS AND WASHERS, RUBRAIL, AND ADHESIVELY ANCHORED BOLTS.

THE HOLD-DOWN PLATE SHALL CONFORM TO AASHTO M270 GRADE 36. AFTER FABRICATION, THE HOLD-DOWN PLATE SHALL BE HOT-DIP GALVANIZED IN ACCORDANCE WITH AASHTO M111.

BOLTS SHALL CONFORM TO THE REQUIREMENTS OF ASTM A307 AND NUTS SHALL CONFORM TO THE REQUIREMENTS OF AASHTO M291. BOLTS, NUTS AND WASHERS SHALL BE GALVANIZED. (AT THE CONTRACTOR'S OPTION, STAINLESS STEEL BOLTS, NUTS AND WASHERS MAY BE USED AS AN ALTERNATE FOR THE 7/8" Ø GALVANIZED BOLTS, NUTS AND WASHERS. THEY SHALL CONFORM TO OR EXCEED THE MECHANICAL REQUIREMENTS OF ASTM A307. THE USE OF THIS ALTERNATE SHALL BE APPROVED BY THE ENGINEER.)

THE GUARDRAIL ANCHOR ASSEMBLY IS REQUIRED AT ALL POINTS WHERE APPROACH GUARDRAIL IS TO BE ATTACHED TO THE END OF BARRIER RAIL. FOR POINTS OF ATTACHMENT, SEE SKETCH.

AFTER INSTALLATION, THE EXPOSED THREAD OF THE BOLT SHALL BE BURRED WITH A SHARP POINTED TOOL.

THE COST OF THE GUARDRAIL ANCHOR ASSEMBLY SHALL BE INCLUDED IN THE UNIT CONTRACT PRICE BID FOR CONCRETE BARRIER RAIL.

THE 1 1/4" Ø HOLES SHALL BE FORMED OR DRILLED WITH A CORE BIT. IMPACT TOOLS WILL NOT BE PERMITTED. ANY CONCRETE DAMAGED BY THIS WORK SHALL BE REPAIRED TO THE SATISFACTION OF THE ENGINEER.

THE C6 X 8.2 RUBRAIL IS TO BE ADHESIVELY ANCHORED TO THE RAIL USING THREE 3/4" Ø X 6" BOLTS WITH WASHERS. LEVEL ONE FIELD TESTING IS REQUIRED, AND THE YIELD LOAD OF THE 3/4" Ø BOLT IS 12 KIPS. FOR ADHESIVELY ANCHORED ANCHOR BOLTS OR DOWELS, SEE STANDARD SPECIFICATIONS. SEE ROADWAY STANDARD 862.03 FOR DETAILS AND LOCATION OF THE RUBRAIL.

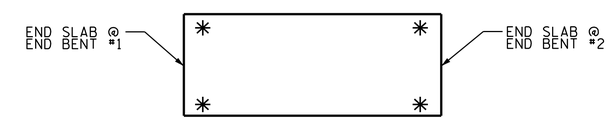

SKETCH SHOWING POINTS OF ATTACHMENTS

✳ DENOTES GUARDRAIL ANCHOR ASSEMBLY

PROJECT NO. BR-0090

NASH COUNTY

STATION: 16+54.00 -L-

SHEET 2 OF 2

STATE OF NORTH CAROLINA
DEPARTMENT OF TRANSPORTATION
RALEIGH

STANDARD

GUARDRAIL ANCHORAGE FOR BARRIER RAIL

NORTH CAROLINA PROFESSIONAL SEAL 030024 ENGINEER ALTER G. ABRAHA

Alter Abraha
DDA094AED5104FD...
06/26/2025

ASSEMBLED BY : S. WANCE	DATE : 01/2023
CHECKED BY : M. M. AHMED	DATE : 02/2025
DRAWN BY : TLA 5/06	REV. 7/12 MAA/GM
CHECKED BY : GM 5/06	REV. 6/13 MAA/GM
	REV. 12/17 MAA/THC

DOCUMENT NOT CONSIDERED FINAL UNLESS ALL SIGNATURES COMPLETED

REVISIONS								SHEET NO.
NO.	BY:	DATE:	NO.	BY:	DATE:			S-21
1			3					TOTAL SHEETS
2			4					35

5/12/2025
R:\Structures\Plans\401_041_BR0090_SMU_BR_S-21_660036.dgn
aabraha

(SHT 1) STD. NO. GRA2

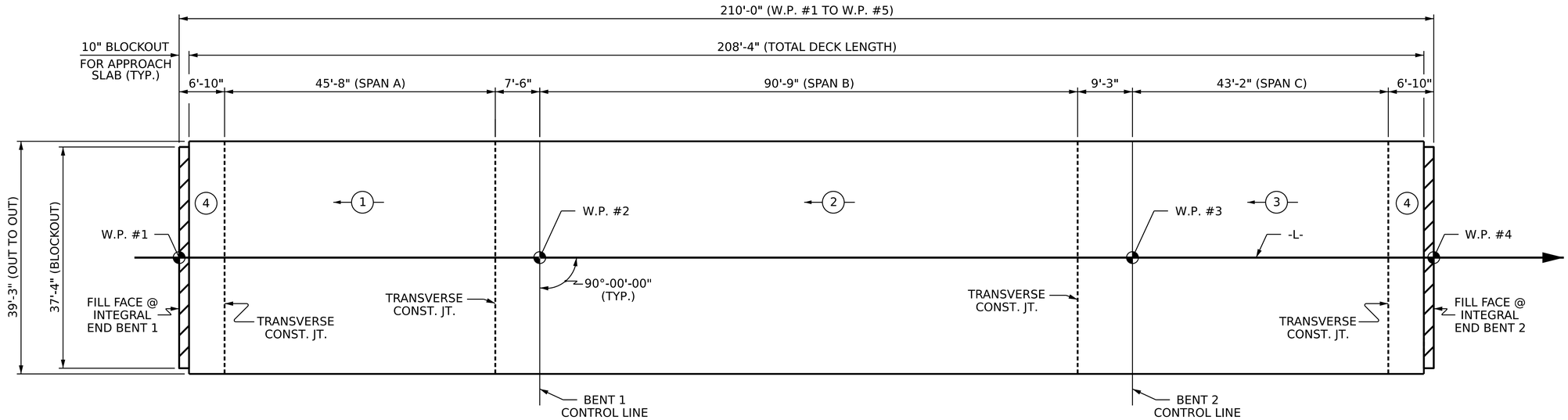

POURING SEQUENCE

INDICATES DIRECTION OF POUR

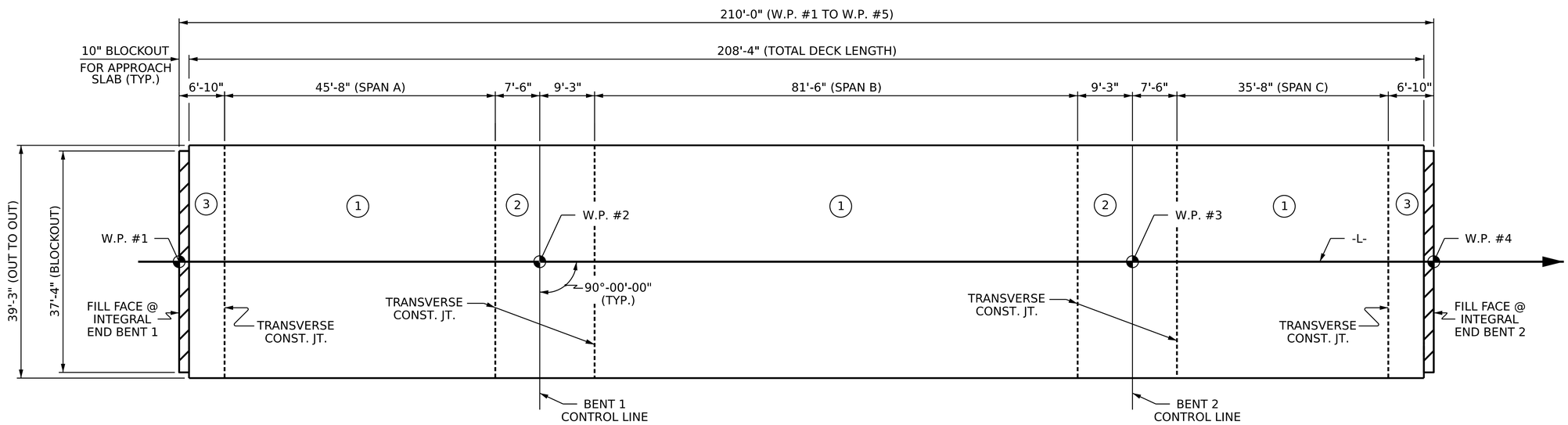

OPTIONAL POURING SEQUENCE

POUR #2 CANNOT BE POURED UNTIL BOTH ADJACENT
POUR #1 REACH A MINIMUM OF 3000 PSI

PROJECT NO. BR-0090
NASH COUNTY
STATION: 16+54.00 -L-

1 OF 1

STATE OF NORTH CAROLINA
DEPARTMENT OF TRANSPORTATION
RALEIGH

SUPERSTRUCTURE

BILL OF MATERIAL
CONCRETE DECK
POUR SEQUENCE

NORTH CAROLINA PROFESSIONAL SEAL 030024 ENGINEER ASTER G. ABRAHA

Aster Abraha
DocuSigned by: 7D0A7BAE2B0104FD...
06/26/2025

REVISIONS							SHEET NO.
NO.	BY:	DATE:	NO.	BY:	DATE:		S-22
1			3				TOTAL SHEETS
2			4				35

DOCUMENT NOT CONSIDERED FINAL UNLESS ALL SIGNATURES COMPLETED

DRAWN BY : M.M. AHMED DATE : 2/2025
CHECKED BY : A. ABRAHA P.E. DATE : 2/2025
DESIGN ENGINEER OF RECORD: M. M. AHMED DATE : 3/2025

5/12/2025
R:\Structures\Plans\401_043_BR0090_SMU_PS_S-22_630036.dgn
agbraha

REINFORCING BAR SCHEDULE

SPANS A-B-C

BAR	No.	SIZE	TYPE	LENGTH	WEIGHT
* A1	384	#5	STR.	38'-11"	15,587
A2	384	#5	STR.	38'-11"	15,587
B1	30	#5	STR.	41'-0"	1,283
B2	30	#5	STR.	50'-0"	1,565
B3	24	#5	STR.	42'-0"	1,051
B4	30	#5	STR.	44'-0"	1,377
B5	30	#5	STR.	48'-0"	1,502
B6	24	#5	STR.	40'-0"	1,001
B7	30	#5	STR.	33'-0"	1,033
* B8	79	#6	STR.	11'-10"	1,404
* B9	27	#4	STR.	29'-5"	531
* B10	53	#5	STR.	58'-0"	3,206
* B11	52	#5	STR.	34'-0"	1,844
* B12	27	#4	STR.	34'-10"	628
* B13	53	#5	STR.	55'-0"	3,040
* B14	52	#5	STR.	33'-0"	1,790
* B15	27	#4	STR.	24'-5"	440
* B16	79	#6	STR.	9'-10"	1,167
REINFORCING STEEL					24,399 LBS.
* EPOXY COATED REINFORCING STEEL					29,637 LBS.

SPANS A-B-C

BAR	No.	SIZE	TYPE	LENGTH	WEIGHT
* S1	44	#4	1	9'-10"	289
* S2	48	#4	1	11'-11"	382
U1	48	#4	2	9'-5"	302
U2	12	#4	2	11'-11"	96
K1	16	#4	STR.	23'-3"	248
K2	8	#4	STR.	4'-6"	24
K3	16	#4	STR.	6'-7"	70
K4	8	#4	STR.	7'-1"	38
K5	4	#4	STR.	4'-8"	12
K6	4	#4	STR.	6'-0"	16
K7	8	#4	STR.	5'-9"	31
K8	20	#4	STR.	2'-7"	35
H1	56	#5	3	14'-3"	832
REINFORCING STEEL					1,704 LBS.
* EPOXY COATED REINFORCING STEEL					671 LBS.

SUPERSTRUCTURE REINFORCING STEEL LENGTHS ARE BASED ON THE FOLLOWING MINIMUM SPLICE LENGTHS

BAR SIZE	SUPERSTRUCTURE EXCEPT APPROACH SLABS, PARAPET, AND BARRIER RAIL		APPROACH SLABS		PARAPET AND BARRIER RAIL
	EPOXY COATED	UNCOATED	EPOXY COATED	UNCOATED	
#4	1'-11"	1'-7"	1'-11"	1'-7"	2'-6"
#5	2'-5"	2'-0"	2'-5"	2'-0"	3'-1"
#6	2'-10"	2'-5"	3'-7"	2'-5"	3'-8"
#7	4'-2"	2'-9"			
#8	4'-9"	3'-2"			

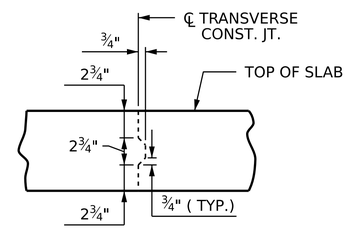

TRANSVERSE CONSTRUCTION JOINT DETAIL

NOTE: REINFORCING STEEL IN SLAB NOT SHOWN. LONGITUDINAL REINFORCING STEEL SHALL BE CONTINUOUS THROUGH JOINT.

BAR TYPES

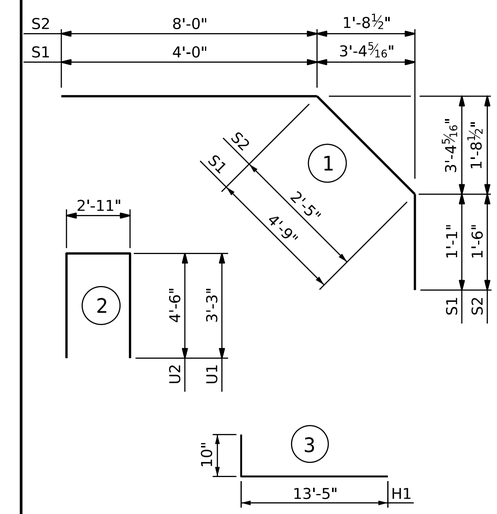

ALL BAR DIMENSIONS ARE OUT TO OUT

SUPERSTRUCTURE BILL OF MATERIAL

	CLASS AA CONCRETE	REINFORCING STEEL	EPOXY COATED REINFORCING STEEL
	(CU.YDS.)	(LBS.)	(LBS.)
POUR #1	59.0	——	——
POUR #2	127.0	——	——
POUR #3	67.7	——	——
POUR #4	52.6		
TOTALS **	306.3	26,103	30,308

** QUANTITIES FOR BARRIER RAIL ARE NOT INCLUDED

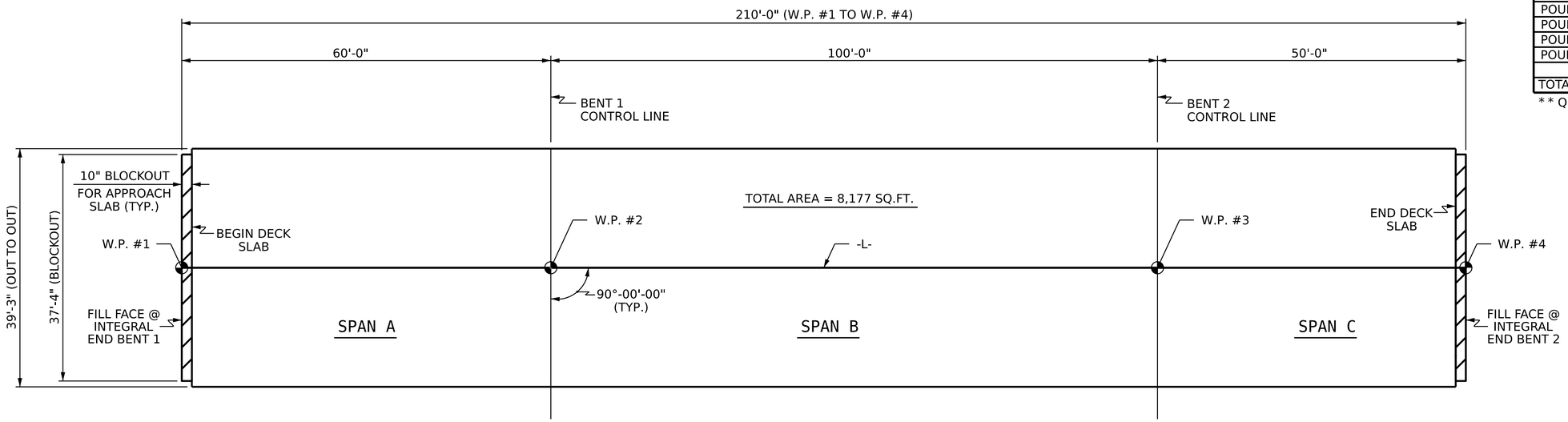

LAYOUT FOR COMPUTING AREA REINFORCED CONCRETE DECK SLAB (SQ. FT. = 8,177)

GROOVING BRIDGE FLOORS

APPROACH SLABS	946.0	SQ.FT.
BRIDGE DECK	6,842.0	SQ.FT.
TOTAL	7,788.0	SQ.FT.

PROJECT NO. BR-0090

NASH COUNTY

STATION: 16+54.00 -L-

SHEET 2 OF 2

STATE OF NORTH CAROLINA
DEPARTMENT OF TRANSPORTATION
RALEIGH

STANDARD

SUPERSTRUCTURE BILL OF MATERIAL

NORTH CAROLINA PROFESSIONAL SEAL 030024 ENGINEER ASTER G. ABRAHA

Aster Abraha
F0D4094AED5104FD...
06/26/2025

DRAWN BY : G. AYES/M.M. AHMED DATE : 2/2025
CHECKED BY : S. WANCE/A. ABRAHA P.E. DATE : 2/2025
DESIGN ENGINEER OF RECORD: M. M. AHMED DATE : 3/2025

6/26/2025
R:\Structures\Plans\401_045_BR0090_SMU_BM_S-23_630036.dgn
aabraha

DOCUMENT NOT CONSIDERED FINAL UNLESS ALL SIGNATURES COMPLETED

REVISIONS						
NO.	BY:	DATE:	NO.	BY:	DATE:	
1			3			
2			4			

SHEET NO. S-23
TOTAL SHEETS 35

STD. NO. BOM2

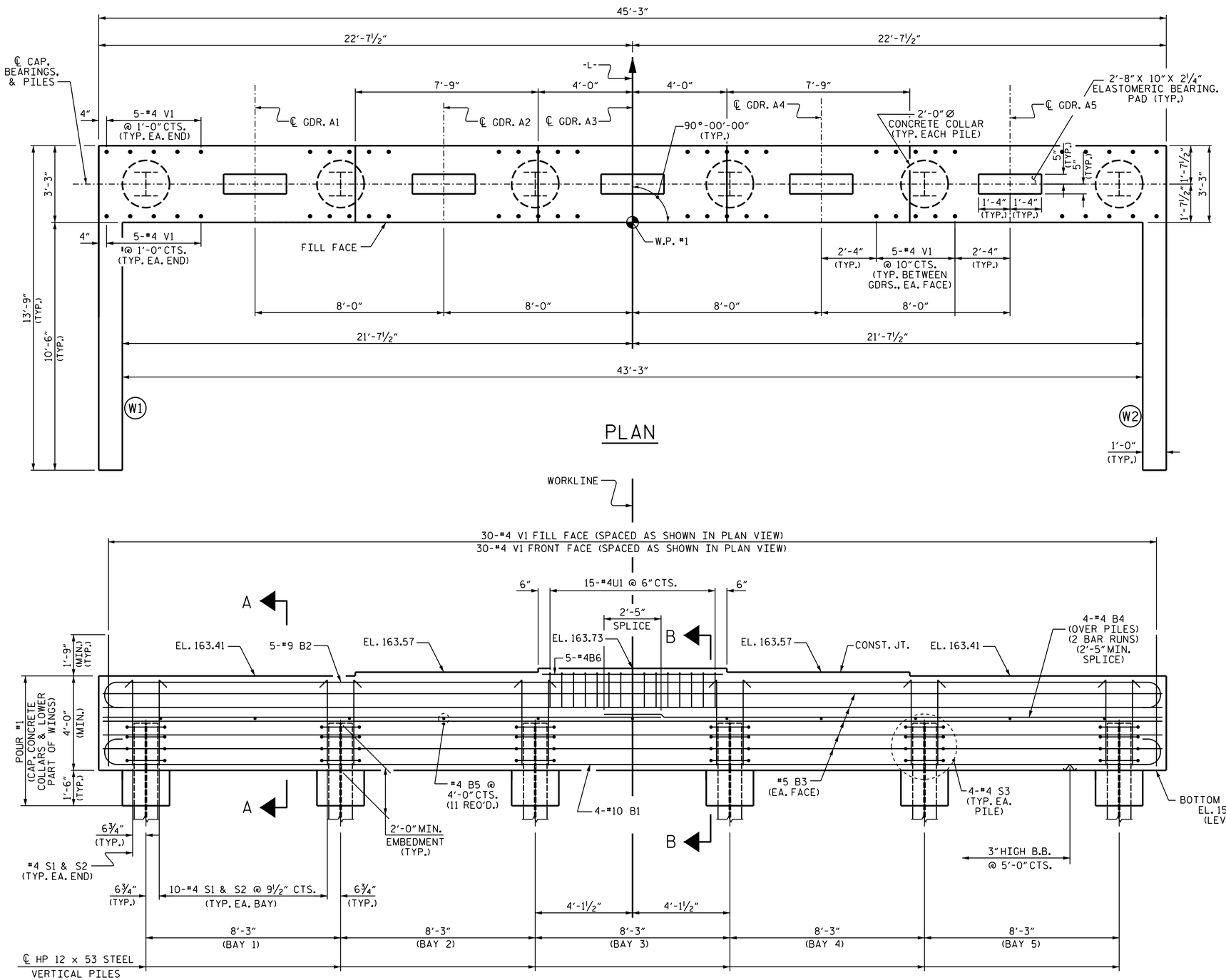

ELEVATION

NOTES

STIRRUPS IN CAP MAY BE SHIFTED AS NECESSARY TO CLEAR #4 V1 BARS.

SEE THE SUPERSTRUCTURE SHEETS FOR UPPER PART OF INTEGRAL END BENT DETAIL.

THE UPPER PART OF INTEGRAL PORTION AND WINGS SHALL BE POURED WITH THE SUPERSTRUCTURE. SEE SUPERSTRUCTURE PLAN OF SPANS.

THE TOP SURFACE OF POUR #1 OF THE END BENT CAP AND WINGS, EXCLUDING THE BEARING AREA. SHALL BE RAKED TO A DEPTH OF ¼".

PROJECT NO. BR-0090

NASH COUNTY

STATION: 16+54.00 -L-

SHEET 1 OF 3

STATE OF NORTH CAROLINA
DEPARTMENT OF TRANSPORTATION
RALEIGH

SUBSTRUCTURE
INTEGRAL
END BENT 1

NORTH CAROLINA PROFESSIONAL SEAL 030024 ENGINEER ASTER G. ABRAHA

DOCUMENT NOT CONSIDERED FINAL UNLESS ALL SIGNATURES COMPLETED

REVISIONS								SHEET NO.
NO.	BY:	DATE:	NO.	BY:	DATE:			S-24
1			3					TOTAL SHEETS
2			4					35

DRAWN BY :	M.M. AHMED	DATE :	01/25
CHECKED BY :	S. WANCE	DATE :	03/23
DESIGN ENGINEER OF RECORD:	M.M. AHMED	DATE :	01/25

4/14/2025
R:\Structures\Plans\401_047_BR0090_SMU_Eb1_S-24_630036.dgn
aabraha

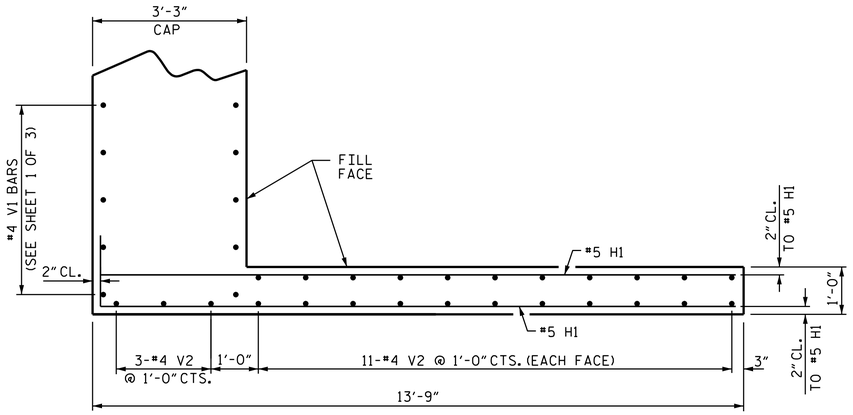

PLAN OF WING W1

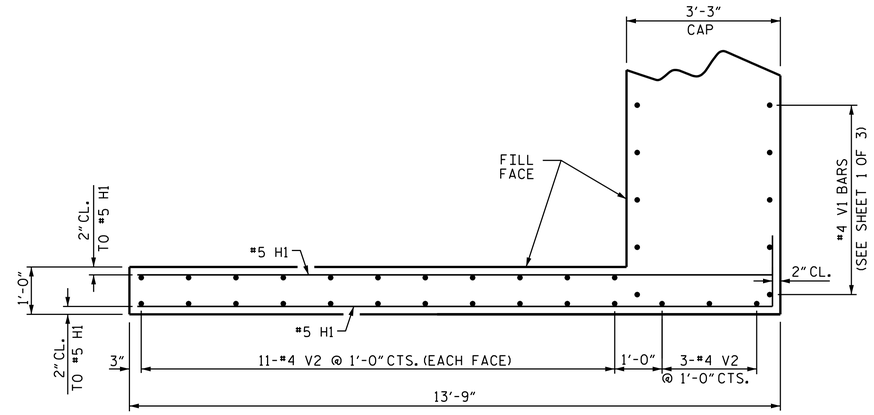

PLAN OF WING W2

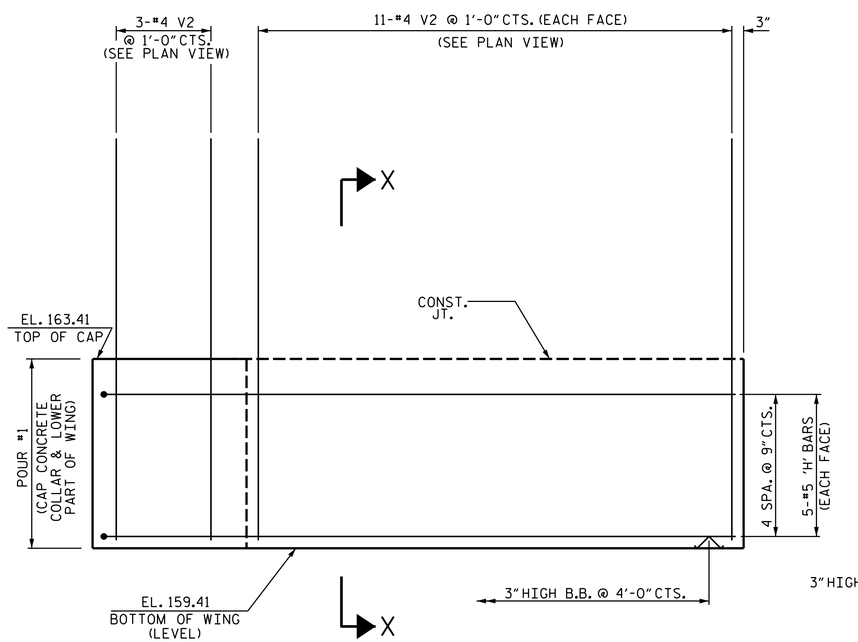

ELEVATION OF WING W1

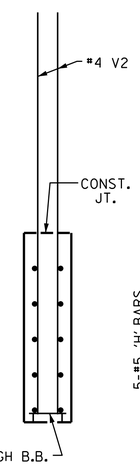

SECTION X-X

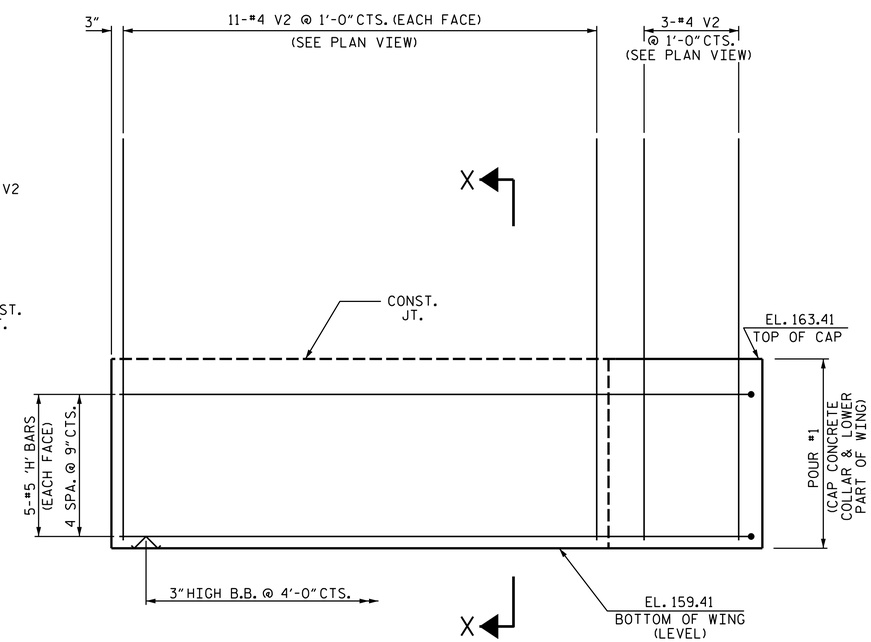

ELEVATION OF WING W2

PROJECT NO. BR-0090

NASH COUNTY

STATION: 16+54.00 -L-

SHEET 2 OF 3

STATE OF NORTH CAROLINA
DEPARTMENT OF TRANSPORTATION
RALEIGH

SUBSTRUCTURE

INTEGRAL
END BENT 1

NORTH CAROLINA PROFESSIONAL SEAL 030024 ENGINEER ASTER G. ABRAHA
DocuSigned by: Aster Abraha
DDA094AED5104FD...
06/26/2025

DRAWN BY : M.M. AHMED DATE : 03/23
CHECKED BY : S. WANCE DATE : 03/23
DESIGN ENGINEER OF RECORD: M.M. AHMED DATE : 01/25

4/16/2025
R:\Structures\Plans\401_049_BR0090_SMU_Eb1_S-25_630036.dgn
aabraha

DOCUMENT NOT CONSIDERED FINAL UNLESS ALL SIGNATURES COMPLETED

REVISIONS							
NO.	BY:	DATE:	NO.	BY:	DATE:		
1			3				
2			4				

SHEET NO. S-25

TOTAL SHEETS 35

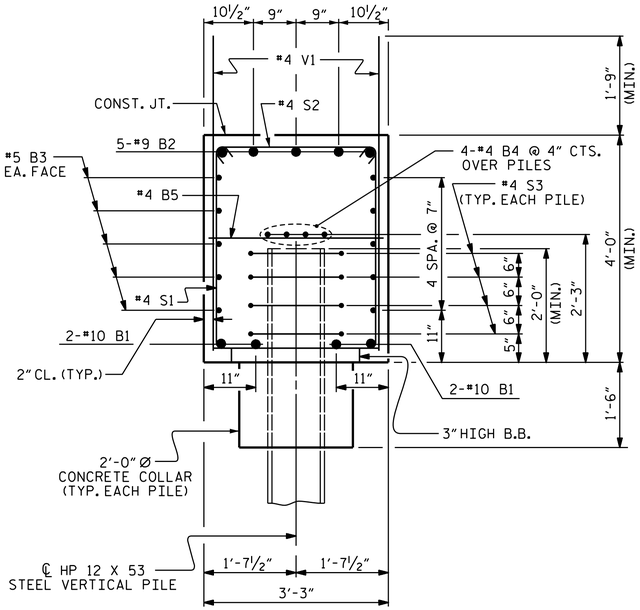

SECTION A-A

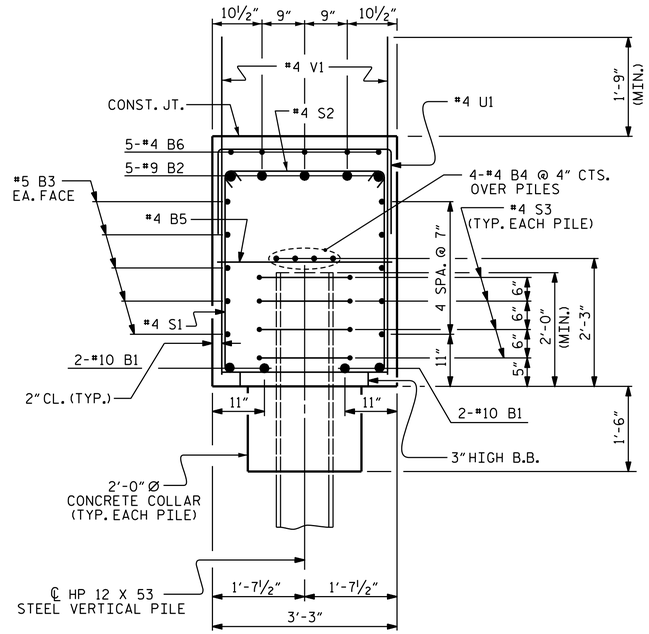

SECTION B-B

BAR TYPES

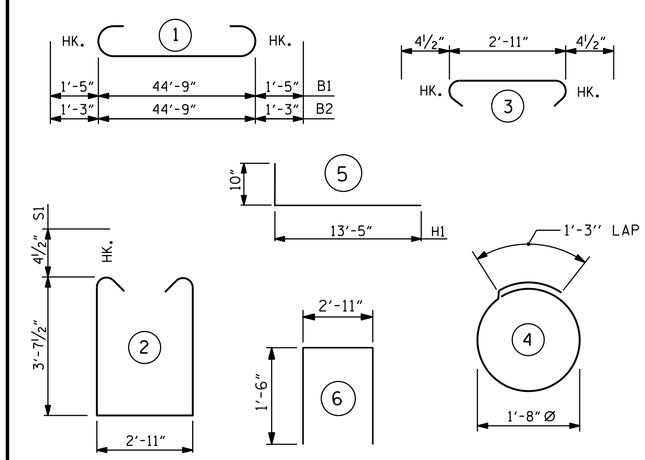

ALL BAR DIMENSIONS ARE OUT TO OUT.

BILL OF MATERIAL

INTEGRAL END BENT #1

BAR	NO.	SIZE	TYPE	LENGTH	WEIGHT
B1	4	#10	1	47'-7"	819
B2	5	#9	1	47'-3"	803
B3	10	#5	STR	44'-9"	467
B4	8	#4	STR	23'-8"	126
B5	11	#4	STR	2'-11"	21
B6	5	#4	STR	7'-8"	26
H1	20	#5	5	14'-3"	297
S1	52	#4	2	10'-11"	379
S2	52	#4	3	3'-8"	127
S3	24	#4	4	6'-6"	104
U1	15	#4	6	5'-11"	59
V1	60	#4	STR	5'-7"	224
V2	50	#4	STR	8'-5"	281

REINFORCING STEEL = 3733 LBS

CLASS A CONCRETE

POUR #1 (CAP, CONCRETE COLLARS & LOWER PART OF WINGS) 26.6 C.Y.

TOTAL 26.6 C.Y.

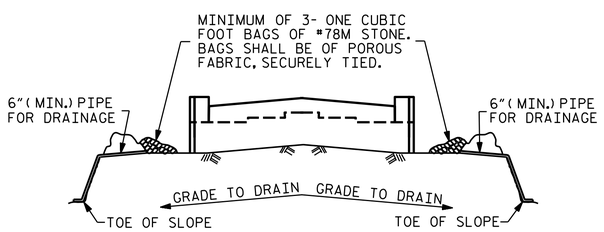

BAGGED STONE AND PIPE SHALL BE PLACED IMMEDIATELY AFTER COMPLETION OF END BENT EXCAVATION. PIPE MAY BE EITHER CONCRETE, CORRUGATED STEEL, CORRUGATED ALUMINUM ALLOY, OR CORRUGATED PLASTIC. PERFORATED PIPE WILL NOT BE ALLOWED.

BAGGED STONE SHALL REMAIN IN PLACE UNTIL THE ENGINEER DIRECTS THAT IT BE REMOVED. THE CONTRACTOR SHALL REMOVE AND DISPOSE OF SILT ACCUMULATIONS AT BAGGED STONE WHEN SO DIRECTED BY THE ENGINEER. BAGS SHALL BE REMOVED AND REPLACED WHENEVER THE ENGINEER DETERMINES THAT THEY HAVE DETERIORATED AND LOST THEIR EFFECTIVENESS.

NO SEPARATE PAYMENT WILL BE MADE FOR THIS WORK AND THE ENTIRE COST OF THIS WORK SHALL BE INCLUDED IN THE UNIT CONTRACT PRICE BID FOR THE SEVERAL PAY ITEMS.

TEMPORARY DRAINAGE AT END BENT

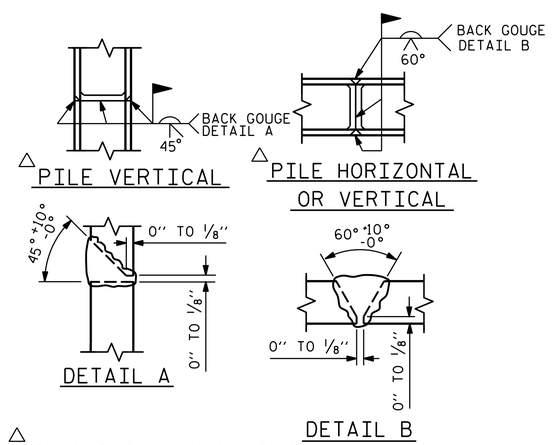

△ POSITION OF PILE DURING WELDING.

PILE SPLICE DETAILS

PROJECT NO. BR-0090

NASH COUNTY

STATION: 16+54.00 -L-

SHEET 3 OF 3

STATE OF NORTH CAROLINA
DEPARTMENT OF TRANSPORTATION
RALEIGH

SUBSTRUCTURE

INTEGRAL END BENT 1

NORTH CAROLINA PROFESSIONAL SEAL 030024 ENGINEER ASTER G. ABRAHA

DocuSigned by: Aster Abraha
06/26/2025

DOCUMENT NOT CONSIDERED FINAL UNLESS ALL SIGNATURES COMPLETED

REVISIONS							SHEET NO.
NO.	BY:	DATE:	NO.	BY:	DATE:		S-26
1			3				TOTAL SHEETS
2			4				35

DRAWN BY : M.M. AHMED DATE : 02/23
CHECKED BY : S. WANCE DATE : 03/23
DESIGN ENGINEER OF RECORD: M.M. AHMED DATE : 01/25

6/26/2025
R:\Structures\Plans\401_051_BR0090_SMU_Eb1_S-26_630036.dgn
aabraha

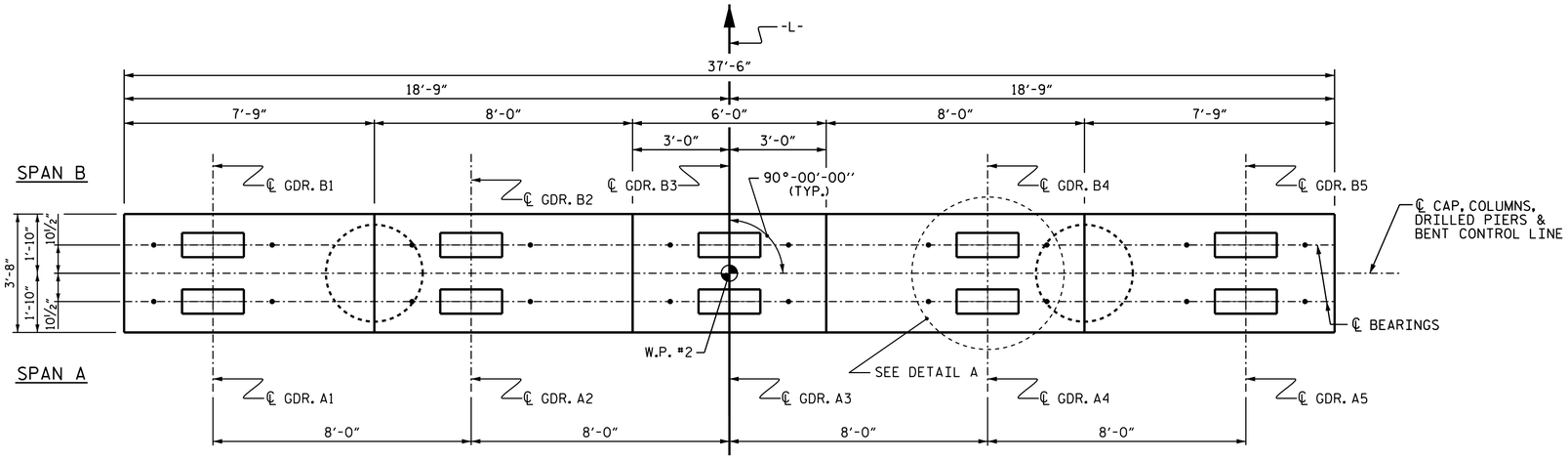

PLAN

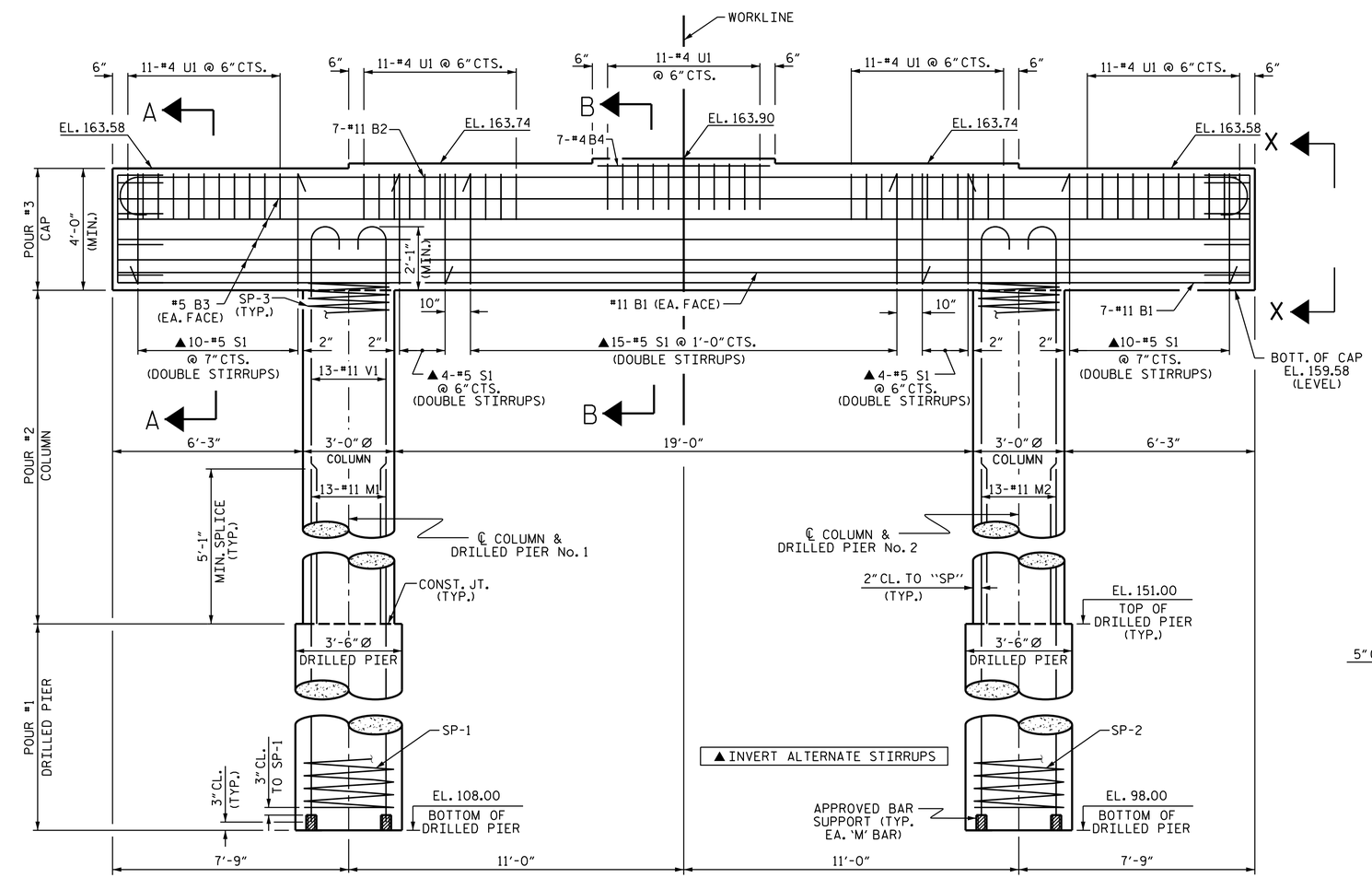

ELEVATION

DIMENSIONS & REINFORCING STEEL ARE TYPICAL FOR EACH COLUMN & DRILLED PIER UNLESS OTHERWISE NOTED.

NOTES

STIRRUPS IN CAP MAY BE SHIFTED AS NECESSARY TO CLEAR ANCHOR BOLTS.

HOOKS ON "V" BARS MAY BE TURNED AS NECESSARY FOR PLACING REINFORCING STEEL.

ALL STEEL IN THE DRILLED PIERS IS INCLUDED IN THE PAY ITEMS FOR "REINFORCING STEEL" AND "SPIRAL COLUMN REINFORCING STEEL" OR "EPOXY COATED SPIRAL COLUMN REINFORCING STEEL".

THE CONTRACTOR'S ATTENTION IS CALLED TO THE FACT THAT THE LONGITUDINAL REINFORCEMENT FOR THE DRILLED PIERS IS DETAILED WITH 3 FEET OF EXTRA LENGTH.

SPLICING OF THE LONGITUDINAL BARS IN THE DRILLED PIER WILL NOT BE PERMITTED.

THE LOCATION OF THE CONSTRUCTION JOINT IN THE DRILLED PIERS IS BASED ON AN APPROXIMATE GROUND LINE ELEVATION. IF THE CONSTRUCTION JOINT IS ABOVE THE ACTUAL GROUND ELEVATION, THE CONTRACTOR SHALL PLACE THE CONSTRUCTION JOINT 1 FOOT BELOW THE GROUND LINE.

FOR DRILLED PIER INSTALLATION INFORMATION, SEE PILE AND DRILLED PIER FOUNDATION TABLES, SHEET S-3.

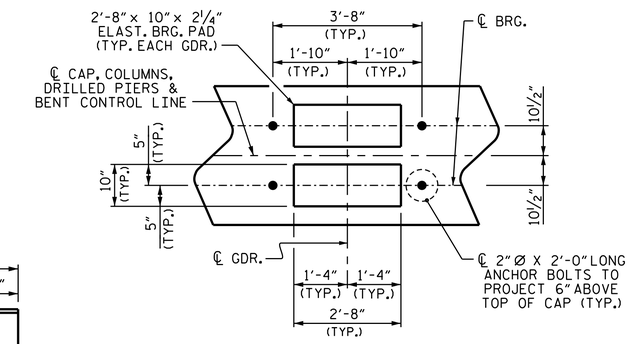

DETAIL "A"

(TYP. EA. GDR.)

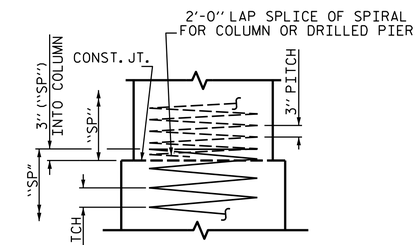

CONSTRUCTION JOINT DETAIL

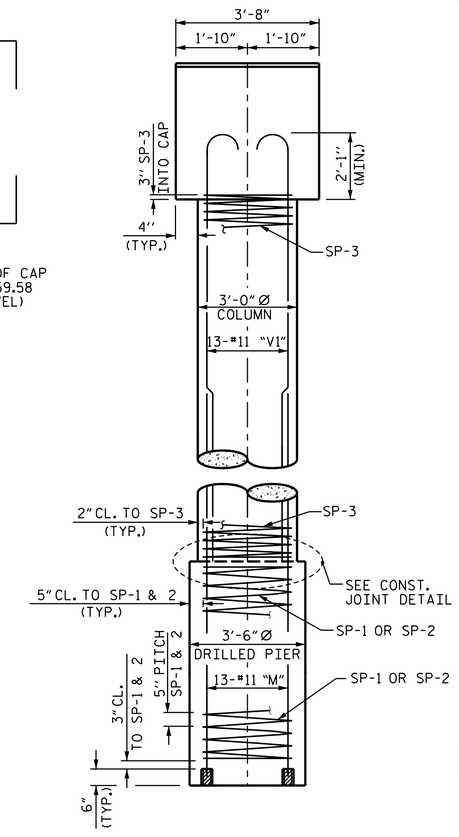

END ELEVATION

PROJECT NO. BR-0090

NASH COUNTY

STATION: 16+54.00 -L-

SHEET 1 OF 2

STATE OF NORTH CAROLINA
DEPARTMENT OF TRANSPORTATION
RALEIGH

SUBSTRUCTURE

BENT 1

NORTH CAROLINA PROFESSIONAL SEAL 030024 ENGINEER ASTER G. ABRAHA

DocuSigned by: Aster Abraha
DDA09A4ED6104FD...
06/26/2025

DOCUMENT NOT CONSIDERED FINAL UNLESS ALL SIGNATURES COMPLETED

REVISIONS						SHEET NO.
NO.	BY:	DATE:	NO.	BY:	DATE:	S-27
1			3			TOTAL SHEETS
2			4			35

DRAWN BY :	M.M. AHMED	DATE :	02/23
CHECKED BY :	S. WANCE	DATE :	03/23
DESIGN ENGINEER OF RECORD:	M.M. AHMED	DATE :	01/25

6/26/2025
R:\Structures\Plans\401_053_BR0090_SMU_B_01_S-27_630036.dgn
aabraha

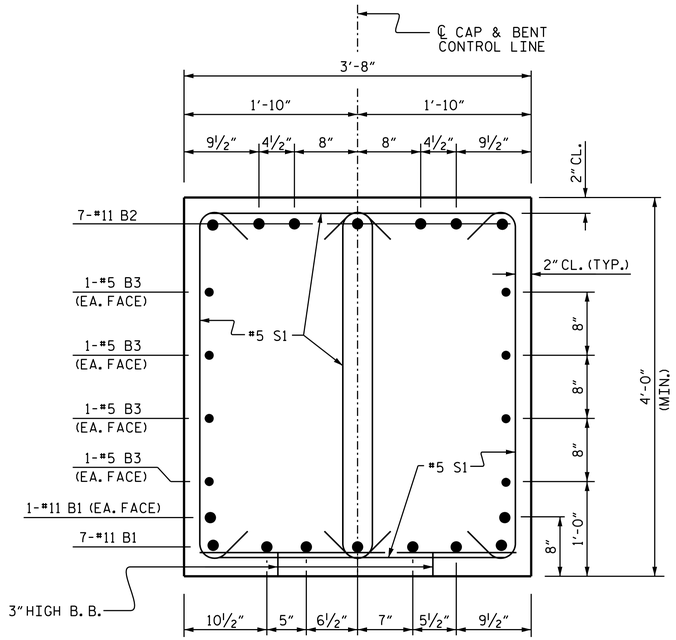

SECTION A-A

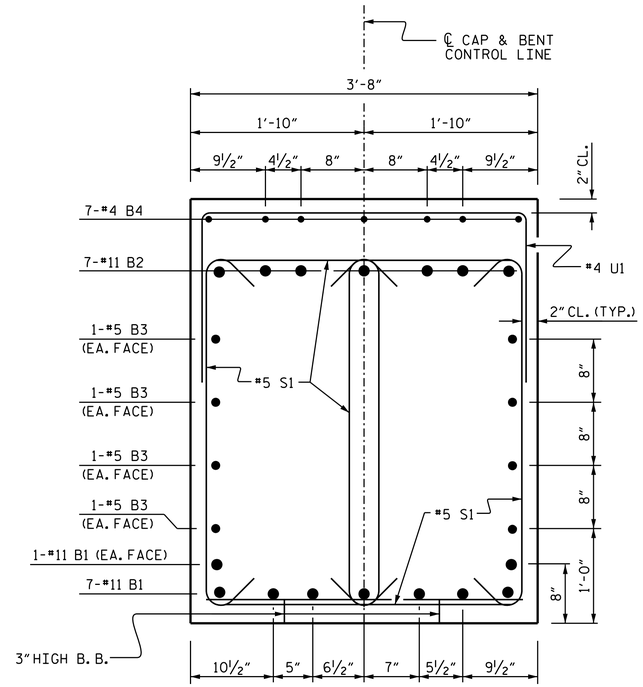

SECTION B-B

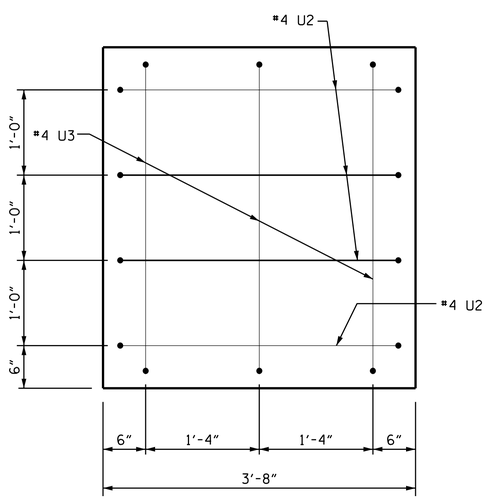

SECTION X-X

(TYPICAL BOTH ENDS)

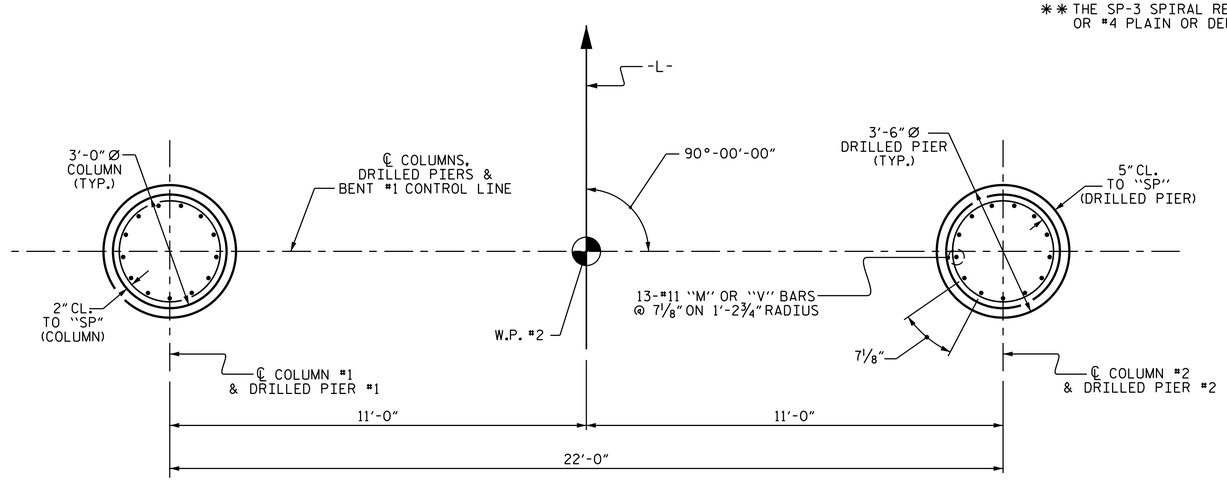

PLAN OF COLUMNS AND DRILLED PIERS

(DIMENSIONS AND REINFORCING STEEL ARE TYPICAL FOR EACH COLUMN AND DRILLED PIER)

BAR TYPES

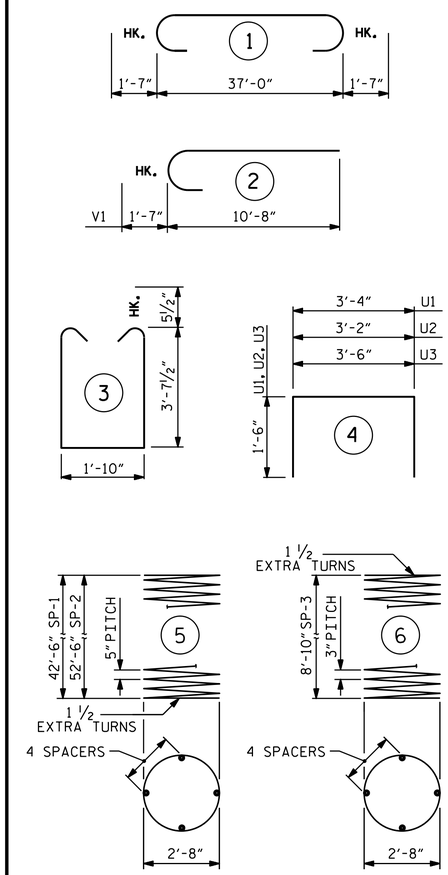

ALL BAR DIMENSIONS ARE OUT TO OUT.

✱✱✱ THE SP-1 & SP-2 SPIRAL REINFORCING STEEL SHALL BE W31 OR D-31 COLD DRAWN WIRE OR #5 PLAIN OR DEFORMED BAR.

✱✱ THE SP-3 SPIRAL REINFORCING STEEL SHALL BE W20 OR D-20 COLD DRAWN WIRE OR #4 PLAIN OR DEFORMED BAR.

BILL OF MATERIAL

BENT 1

BAR	NO.	SIZE	TYPE	LENGTH	WEIGHT
B1	9	#11	STR	37'-2"	1,777
B2	7	#11	1	40'-2"	1,494
B3	8	#5	STR	37'-2"	310
B4	7	#4	STR	5'-8"	26
M1	13	#11	STR	50'-10"	3,511
M2	13	#11	STR	60'-10"	4,202
S1	86	#5	3	10'-0"	897
U1	55	#4	4	6'-4"	233
U2	8	#4	4	6'-2"	33
U3	6	#4	4	6'-6"	26
V1	26	#11	2	12'-3"	1,692

REINFORCING STEEL _____ 14,201 LBS.

SPIRAL COLUMN REINFORCING STEEL					LBS.
SP-1	1	✱✱✱	5	862'-0"	900
SP-2	1	✱✱✱	5	1059'-0"	1,105
SP-3	2	✱✱	6	305'-0"	408

TOTAL SPIRAL COLUMN REINFORCING STEEL _____ 2,413 LBS.

CLASS A CONCRETE BREAKDOWN

POUR 2 (COLUMNS) 4.5 CU.YDS.
POUR 3 (CAP) 21.1 CU.YDS.

TOTAL CLASS A CONCRETE 25.6 CU.YDS.

3'-6"Ø DRILLED PIERS

DRILLED PIER CONCRETE
POUR 1 (DRILLED PIERS) 34.2 CU.YDS.

PROJECT NO. BR-0090

NASH COUNTY

STATION: 16+54.00 -L-

SHEET 2 OF 2

STATE OF NORTH CAROLINA
DEPARTMENT OF TRANSPORTATION
RALEIGH

SUBSTRUCTURE

BENT #1

NORTH CAROLINA PROFESSIONAL SEAL 030024 ENGINEER ASTER G. ABRAHA

DocuSigned by: Aster Abraha
DD4094AED5104FD...
06/26/2025

DRAWN BY : M.M. AHMED DATE : 01/23
CHECKED BY : S. WANCE DATE : 03/23
DESIGN ENGINEER OF RECORD: M.M. AHMED DATE : 01/25

4/29/2025
V:\Structures\Plans\401_055_BR0090_SMU_B_01_S-28_630036.dgn
mmohmed

DOCUMENT NOT CONSIDERED FINAL UNLESS ALL SIGNATURES COMPLETED

REVISIONS							
NO.	BY:	DATE:	NO.	BY:	DATE:		
1			3				
2			4				

SHEET NO. S-28

TOTAL SHEETS 35

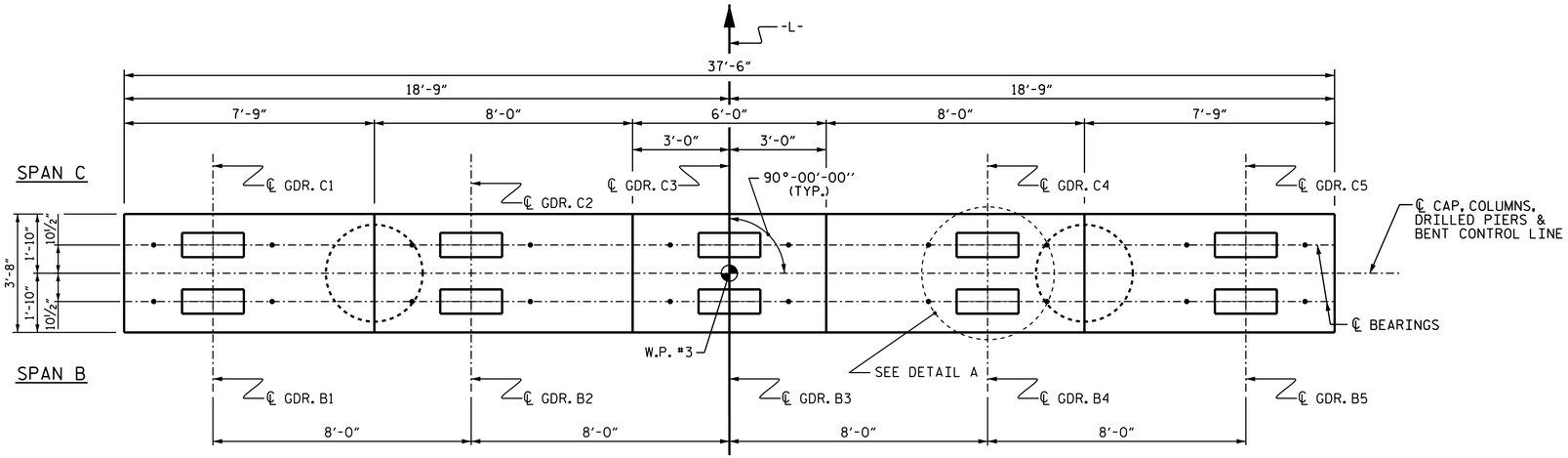

PLAN

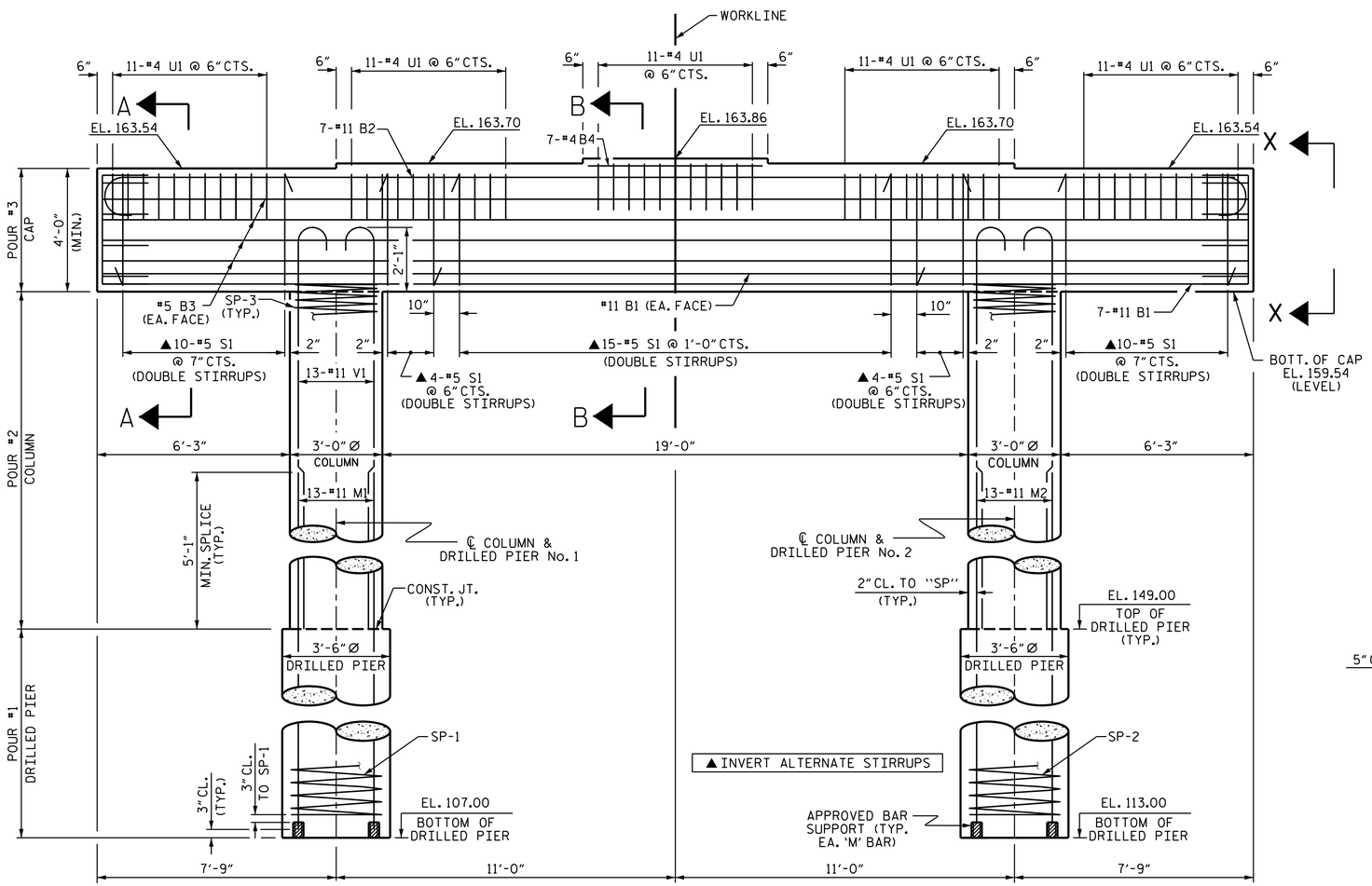

ELEVATION

DIMENSIONS & REINFORCING STEEL ARE TYPICAL FOR EACH COLUMN & DRILLED PIER UNLESS OTHERWISE NOTED.

NOTES

STIRRUPS IN CAP MAY BE SHIFTED AS NECESSARY TO CLEAR ANCHOR BOLTS.

HOOKS ON "V" BARS MAY BE TURNED AS NECESSARY FOR PLACING REINFORCING STEEL.

ALL STEEL IN THE DRILLED PIERS IS INCLUDED IN THE PAY ITEMS FOR "REINFORCING STEEL" AND "SPIRAL COLUMN REINFORCING STEEL" OR "EPOXY COATED SPIRAL COLUMN REINFORCING STEEL".

THE CONTRACTOR'S ATTENTION IS CALLED TO THE FACT THAT THE LONGITUDINAL REINFORCEMENT FOR THE DRILLED PIERS IS DETAILED WITH 3 FEET OF EXTRA LENGTH.

SPLICING OF THE LONGITUDINAL BARS IN THE DRILLED PIER WILL NOT BE PERMITTED.

THE LOCATION OF THE CONSTRUCTION JOINT IN THE DRILLED PIERS IS BASED ON AN APPROXIMATE GROUND LINE ELEVATION. IF THE CONSTRUCTION JOINT IS ABOVE THE ACTUAL GROUND ELEVATION, THE CONTRACTOR SHALL PLACE THE CONSTRUCTION JOINT 1 FOOT BELOW THE GROUND LINE.

FOR DRILLED PIER INSTALLATION INFORMATION, SEE PILE AND DRILLED PIER FOUNDATION TABLES, SHEET S-3.

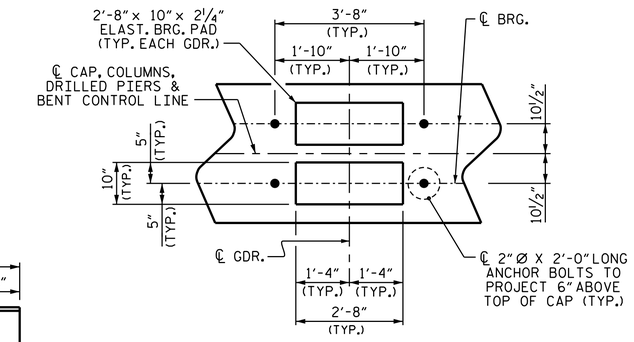

DETAIL "A"

(TYP. EA. GDR.)

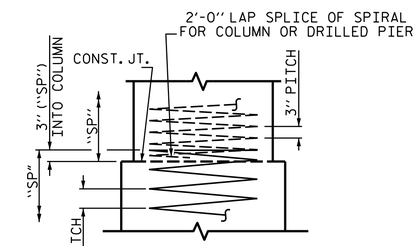

CONSTRUCTION JOINT DETAIL

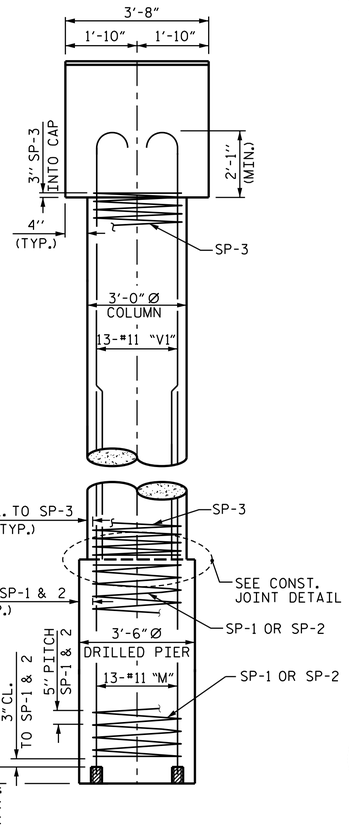

END ELEVATION

PROJECT NO. BR-0090

NASH COUNTY

STATION: 16+54.00 -L-

SHEET 1 OF 2

STATE OF NORTH CAROLINA
DEPARTMENT OF TRANSPORTATION
RALEIGH

SUBSTRUCTURE

BENT 2

NORTH CAROLINA PROFESSIONAL SEAL 030024 ENGINEER ASTER G. ABRAHA

DocuSigned by: ASTER G. ABRAHA
DDA094AED0104FD...
06/26/2025

DOCUMENT NOT CONSIDERED FINAL UNLESS ALL SIGNATURES COMPLETED

REVISIONS							
NO.	BY:	DATE:	NO.	BY:	DATE:	SHEET NO.	
1			3			S-29	
2			4			TOTAL SHEETS	
						35	

DRAWN BY :	M.M. AHMED	DATE :	02/23
CHECKED BY :	S. WANCE	DATE :	03/23
DESIGN ENGINEER OF RECORD:	M.M. AHMED	DATE :	01/25

6/26/2025
R:\Structures\Plans\401_057_BR0090_SMU_B_02_S-29_630036.dgn
aabraha

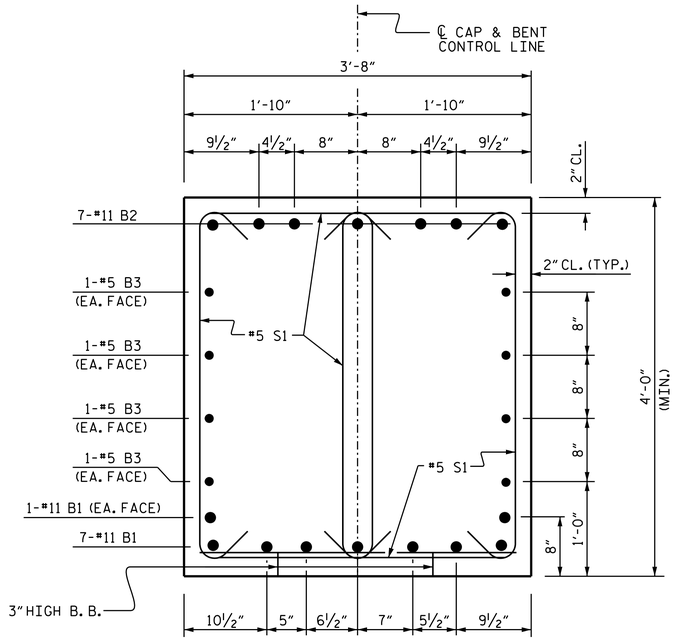

SECTION A-A

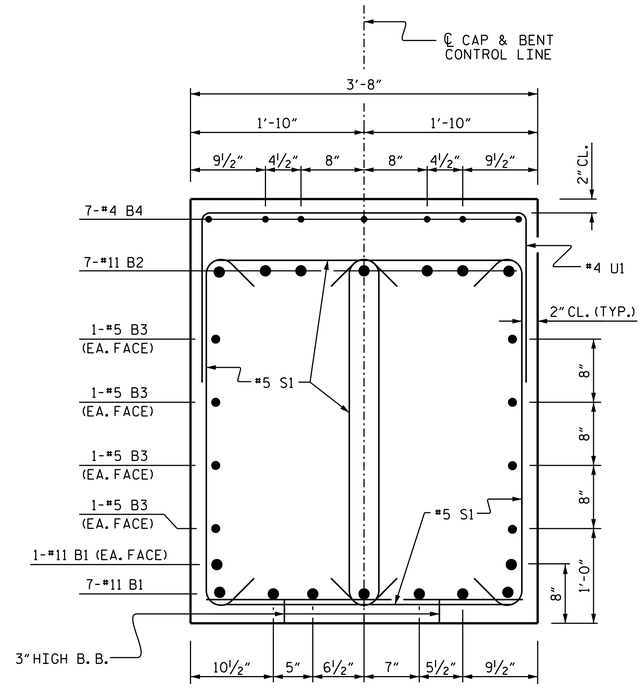

SECTION B-B

BAR TYPES

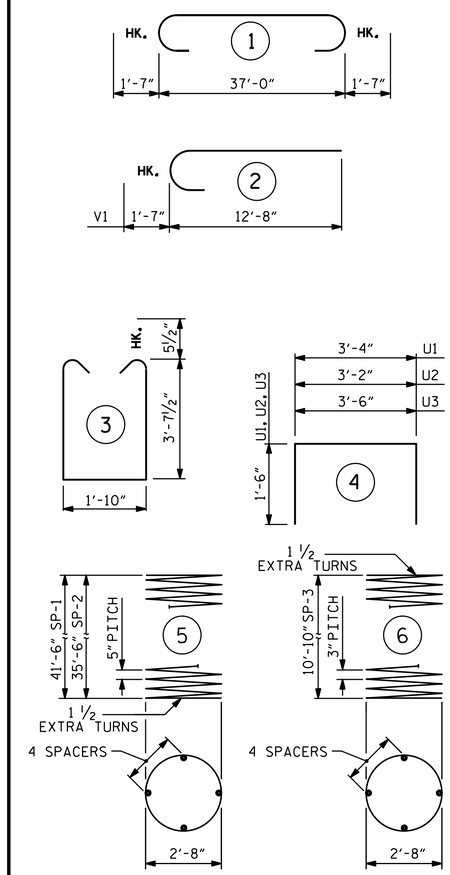

ALL BAR DIMENSIONS ARE OUT TO OUT.

BILL OF MATERIAL

BENT 2

BAR	NO.	SIZE	TYPE	LENGTH	WEIGHT
B1	9	#11	STR	37'-2"	1,777
B2	7	#11	1	40'-2"	1,494
B3	8	#5	STR	37'-2"	310
B4	7	#4	STR	5'-8"	26
M1	13	#11	STR	49'-10"	3,442
M2	13	#11	STR	43'-10"	3,028
S1	86	#5	3	10'-0"	897
U1	55	#4	4	6'-4"	233
U2	8	#4	4	6'-2"	33
U3	6	#4	4	6'-6"	26
V1	26	#11	2	14'-3"	1,968

REINFORCING STEEL _____ 13,234 LBS.

SPIRAL COLUMN REINFORCING STEEL					
SP-1	1	***	5	846'-0"	883
SP-2	1	***	5	731'-0"	763
SP-3	2	**	6	371'-0"	496

TOTAL SPIRAL COLUMN REINFORCING STEEL _____ 2,142 LBS.

CLASS A CONCRETE BREAKDOWN

POUR 2 (COLUMNS) 5.5 CU.YDS.
POUR 3 (CAP) 21.1 CU.YDS.

TOTAL CLASS A CONCRETE 26.6 CU.YDS.

3'-6" Ø DRILLED PIERS

DRILLED PIER CONCRETE
POUR 1 (DRILLED PIERS) 27.8 CU.YDS.

*** THE SP-1 & SP-2 SPIRAL REINFORCING STEEL SHALL BE W31 OR D-31 COLD DRAWN WIRE OR #5 PLAIN OR DEFORMED BAR.

** THE SP-3 SPIRAL REINFORCING STEEL SHALL BE W20 OR D-20 COLD DRAWN WIRE OR #4 PLAIN OR DEFORMED BAR.

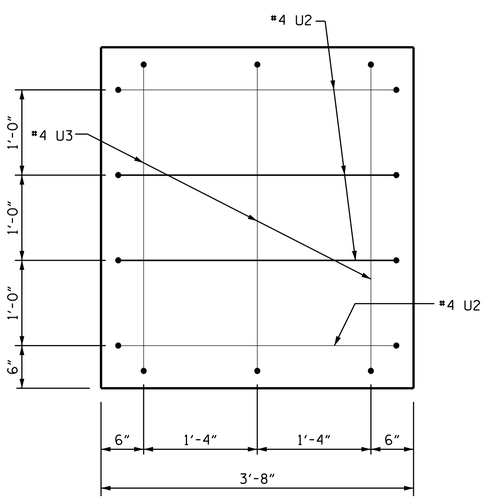

SECTION X-X
(TYPICAL BOTH ENDS)

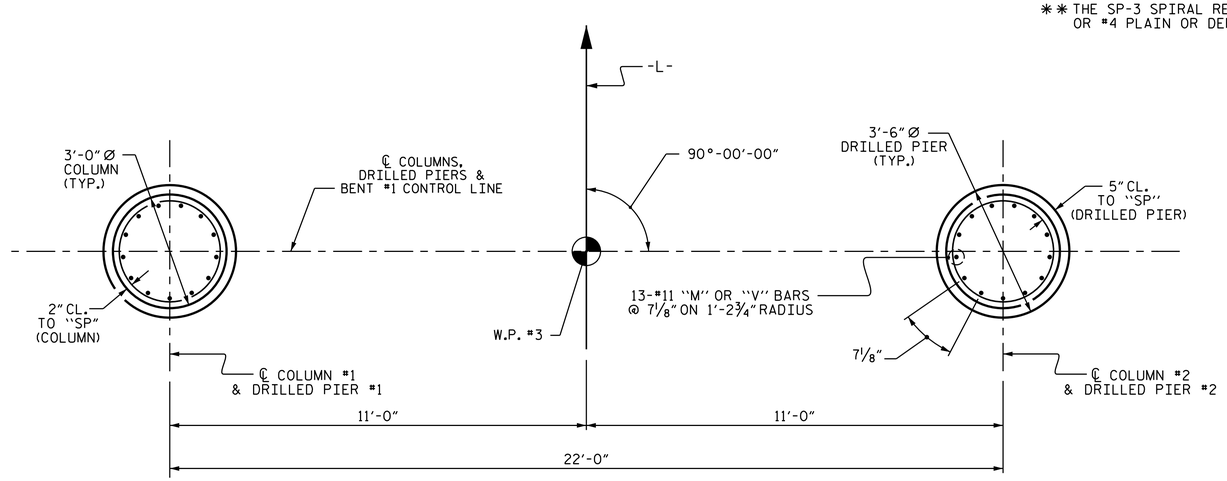

PLAN OF COLUMNS AND DRILLED PIERS
(DIMENSIONS AND REINFORCING STEEL ARE TYPICAL FOR EACH COLUMN AND DRILLED PIER)

PROJECT NO. BR-0090
NASH COUNTY
STATION: 16+54.00 -L-

SHEET 2 OF 2

STATE OF NORTH CAROLINA
DEPARTMENT OF TRANSPORTATION
RALEIGH

SUBSTRUCTURE

BENT #2

NORTH CAROLINA PROFESSIONAL SEAL 030024 ENGINEER ASTER G. ABRAHA
DocuSigned by: Aster Abraha
DDA0094AED5104FD...
06/26/2025

DRAWN BY : M.M. AHMED DATE : 01/23
CHECKED BY : S. WANCE DATE : 03/23
DESIGN ENGINEER OF RECORD: M.M. AHMED DATE : 01/25

DOCUMENT NOT CONSIDERED FINAL UNLESS ALL SIGNATURES COMPLETED

REVISIONS								SHEET NO.
NO.	BY:	DATE:	NO.	BY:	DATE:			S-30
1			3					TOTAL SHEETS
2			4					35

5/12/2025
V:\Structures\Plans\401_059_BR0090_SMU_B_02_S-30_630036.dgn
mmahmed

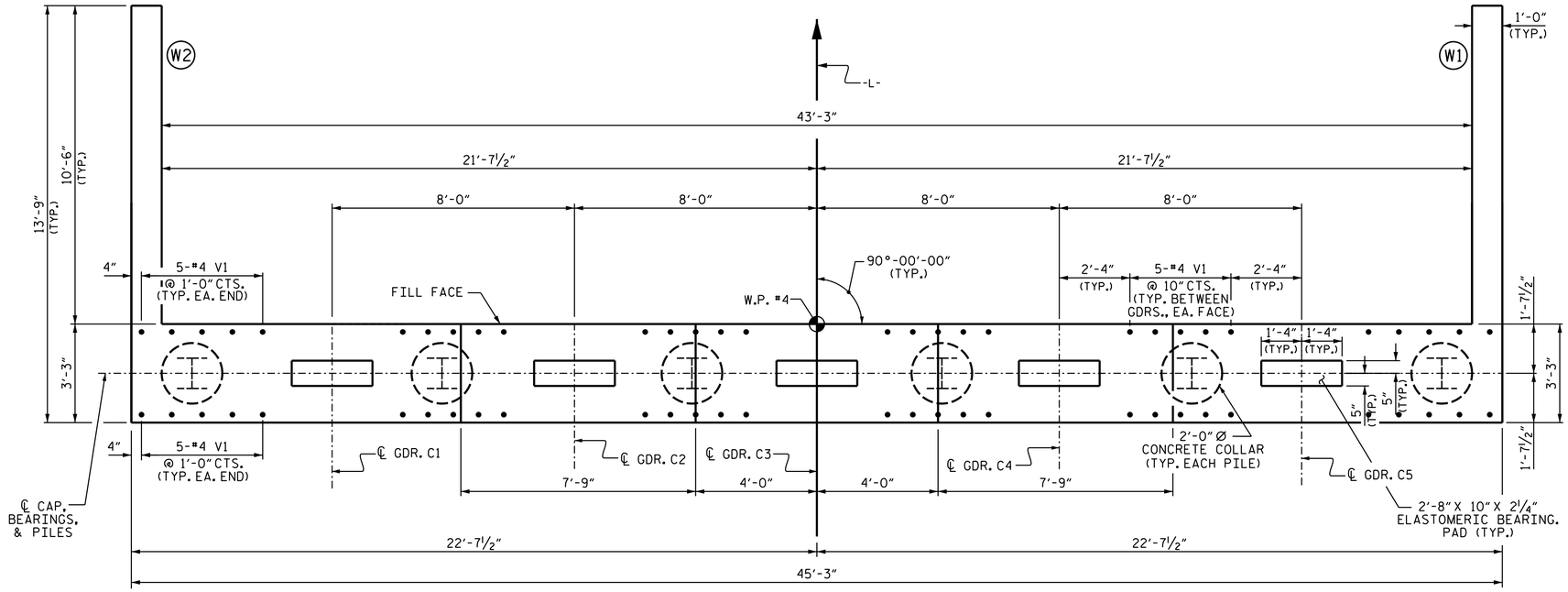

PLAN

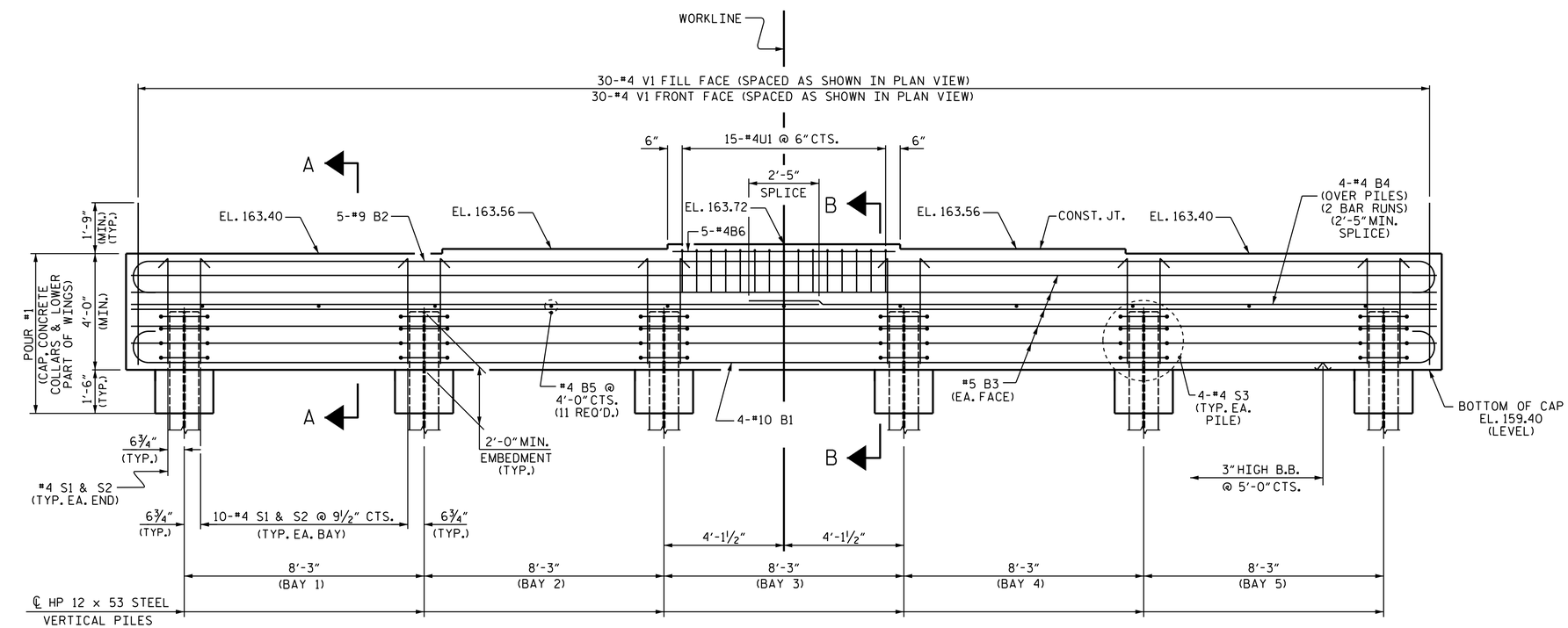

ELEVATION

NOTES

STIRRUPS IN CAP MAY BE SHIFTED AS NECESSARY TO CLEAR #4 V1 BARS.

SEE THE SUPERSTRUCTURE SHEETS FOR UPPER PART OF INTEGRAL END BENT DETAIL.

THE UPPER PART OF INTEGRAL PORTION AND WINGS SHALL BE POURED WITH THE SUPERSTRUCTURE. SEE SUPERSTRUCTURE PLAN OF SPANS.

THE TOP SURFACE OF POUR #1 OF THE END BENT CAP AND WINGS, EXCLUDING THE BEARING AREA. SHALL BE RAKED TO A DEPTH OF ¼".

PROJECT NO. BR-0090

NASH COUNTY

STATION: 16+54.00 -L-

SHEET 1 OF 3

STATE OF NORTH CAROLINA
DEPARTMENT OF TRANSPORTATION
RALEIGH

SUBSTRUCTURE

INTEGRAL END BENT 2

NORTH CAROLINA PROFESSIONAL SEAL 030024 ENGINEER ASTER G. ABRAHA

DocuSigned by: Aster Abraha
DDA094AED5104FD...
06/26/2025

REVISIONS								SHEET NO.
NO.	BY:	DATE:	NO.	BY:	DATE:			S-31
1			3					TOTAL SHEETS
2			4					35

DOCUMENT NOT CONSIDERED FINAL UNLESS ALL SIGNATURES COMPLETED

DRAWN BY :	M.M. AHMED	DATE :	11/22
CHECKED BY :	S. WANCE	DATE :	03/23
DESIGN ENGINEER OF RECORD:	M.M. AHMED	DATE :	-

4/16/2025
R:\Structures\Plans\401_061_BR0090_SMU_Eb2_S-31_630036.dgn
agbraha

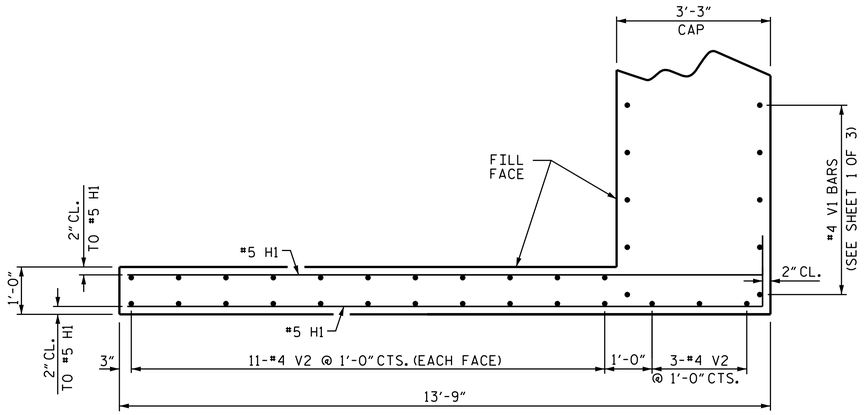

PLAN OF WING W2

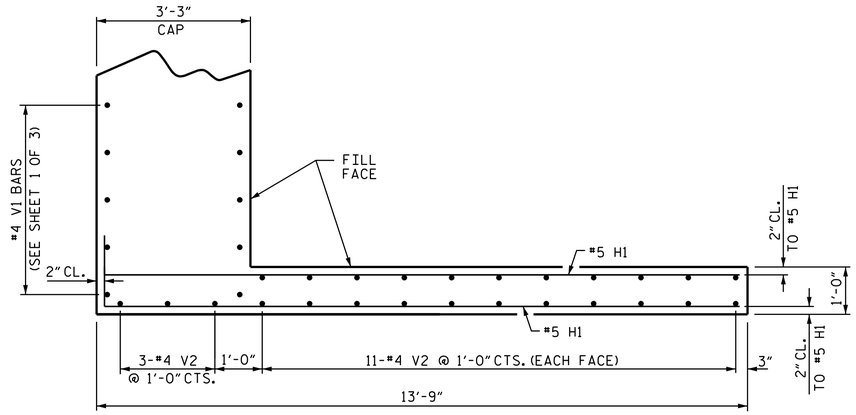

PLAN OF WING W1

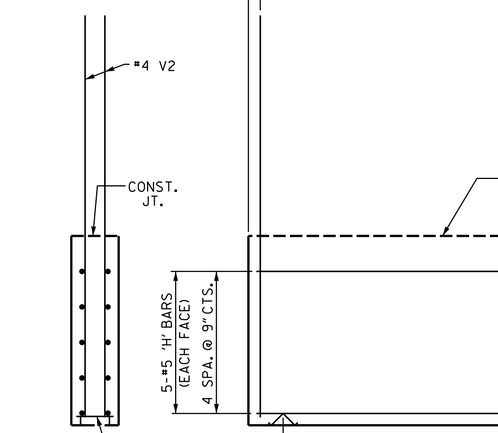

SECTION X-X

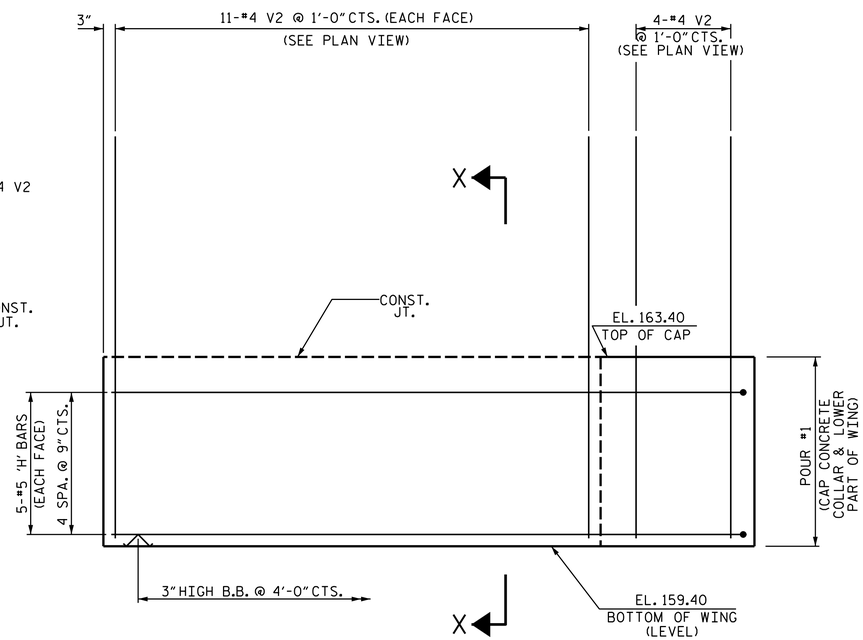

ELEVATION OF WING W2

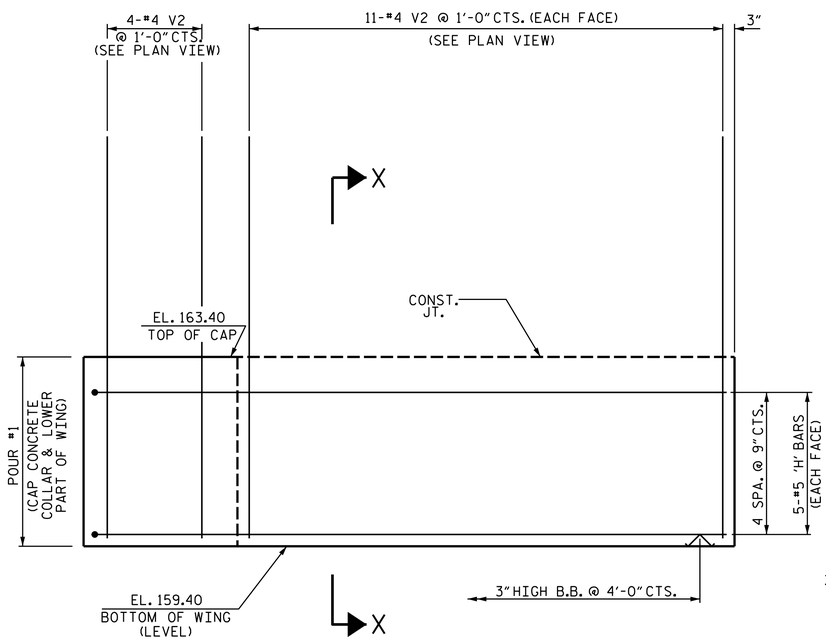

ELEVATION OF WING W1

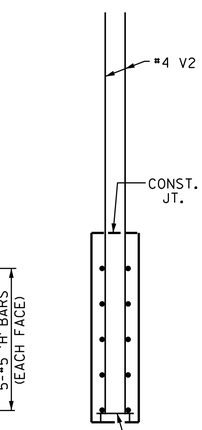

SECTION X-X

PROJECT NO. BR-0090

NASH COUNTY

STATION: 16+54.00 -L-

SHEET 2 OF 3

STATE OF NORTH CAROLINA
DEPARTMENT OF TRANSPORTATION
RALEIGH

SUBSTRUCTURE

INTEGRAL
END BENT 2

NORTH CAROLINA PROFESSIONAL SEAL 030024 ENGINEER ASTER G. ABRAHA
DOA094AED5104FD...
06/26/2025

DOCUMENT NOT CONSIDERED FINAL UNLESS ALL SIGNATURES COMPLETED

REVISIONS								SHEET NO.
NO.	BY:	DATE:	NO.	BY:	DATE:			S-32
1			3					TOTAL SHEETS
2			4					35

DRAWN BY : M.M. AHMED DATE : 03/23
CHECKED BY : S. WANCE DATE : 03/23
DESIGN ENGINEER OF RECORD: M.M. AHMED DATE : 01/25

4/16/2025
R:\Structures\Plans\401_063_BR0090_SMU_Eb2_S-32_630036.dgn
aabraha

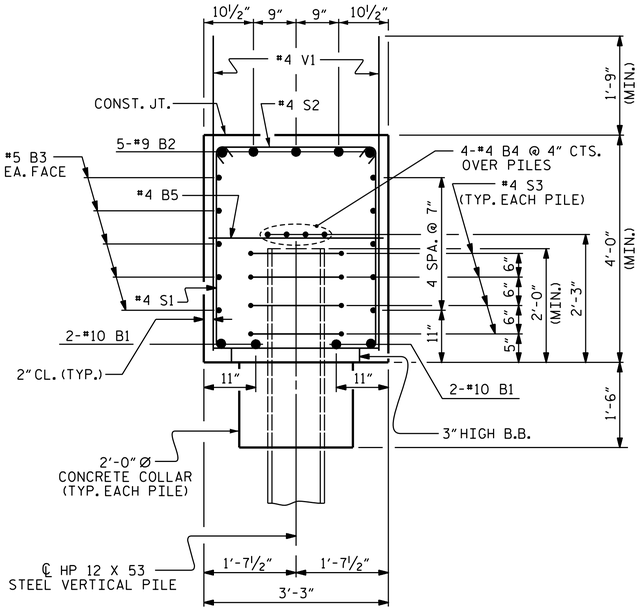

SECTION A-A

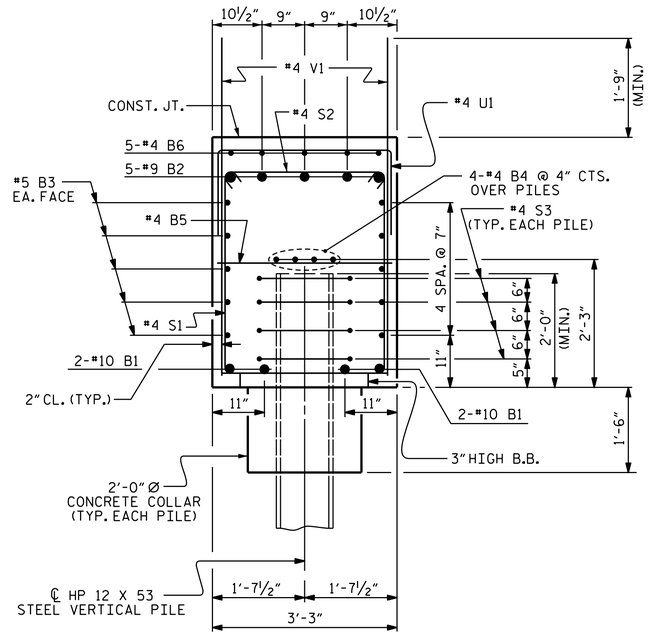

SECTION B-B

BAR TYPES

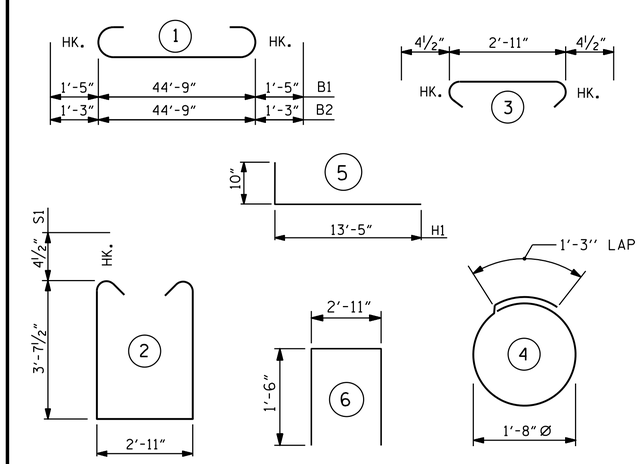

ALL BAR DIMENSIONS ARE OUT TO OUT.

BILL OF MATERIAL

INTEGRAL END BENT #2

BAR	NO.	SIZE	TYPE	LENGTH	WEIGHT
B1	4	#10	1	47'-7"	819
B2	5	#9	1	47'-3"	803
B3	10	#5	STR	44'-9"	467
B4	8	#4	STR	23'-8"	126
B5	11	#4	STR	2'-11"	21
B6	5	#4	STR	7'-8"	26
H1	20	#5	5	14'-3"	297
S1	52	#4	2	10'-11"	379
S2	52	#4	3	3'-8"	127
S3	24	#4	4	6'-6"	104
U1	15	#4	6	5'-11"	59
V1	60	#4	STR	5'-7"	224
V2	50	#4	STR	8'-5"	281

REINFORCING STEEL = 3733 LBS

CLASS A CONCRETE

POUR #1 (CAP, CONCRETE COLLARS & LOWER PART OF WINGS) 26.6 C.Y.

TOTAL 26.6 C.Y.

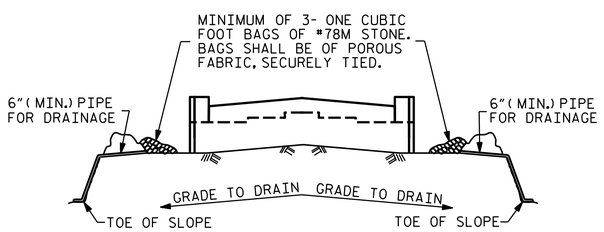

BAGGED STONE AND PIPE SHALL BE PLACED IMMEDIATELY AFTER COMPLETION OF END BENT EXCAVATION. PIPE MAY BE EITHER CONCRETE, CORRUGATED STEEL, CORRUGATED ALUMINUM ALLOY, OR CORRUGATED PLASTIC. PERFORATED PIPE WILL NOT BE ALLOWED.

BAGGED STONE SHALL REMAIN IN PLACE UNTIL THE ENGINEER DIRECTS THAT IT BE REMOVED. THE CONTRACTOR SHALL REMOVE AND DISPOSE OF SILT ACCUMULATIONS AT BAGGED STONE WHEN SO DIRECTED BY THE ENGINEER. BAGS SHALL BE REMOVED AND REPLACED WHENEVER THE ENGINEER DETERMINES THAT THEY HAVE DETERIORATED AND LOST THEIR EFFECTIVENESS.

NO SEPARATE PAYMENT WILL BE MADE FOR THIS WORK AND THE ENTIRE COST OF THIS WORK SHALL BE INCLUDED IN THE UNIT CONTRACT PRICE BID FOR THE SEVERAL PAY ITEMS.

TEMPORARY DRAINAGE AT END BENT

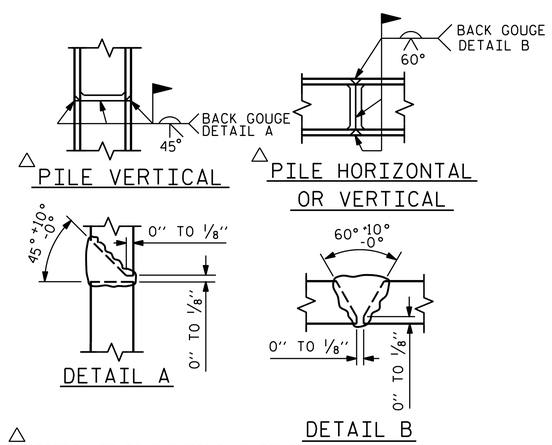

△ POSITION OF PILE DURING WELDING.

PILE SPLICE DETAILS

PROJECT NO. BR-0090

NASH COUNTY

STATION: 16+54.00 -L-

SHEET 3 OF 3

STATE OF NORTH CAROLINA
DEPARTMENT OF TRANSPORTATION
RALEIGH

SUBSTRUCTURE

INTEGRAL END BENT 2

NORTH CAROLINA PROFESSIONAL SEAL 030024 ENGINEER ASTER G. ABRAHA

ASTER ABRAHA
DS4609A4ED5104FD...
06/26/2025

DOCUMENT NOT CONSIDERED FINAL UNLESS ALL SIGNATURES COMPLETED

REVISIONS							SHEET NO.
NO.	BY:	DATE:	NO.	BY:	DATE:		S-33
1			3				TOTAL SHEETS
2			4				35

DRAWN BY : M.M. AHMED DATE : 02/23
CHECKED BY : S. WANCE / S. LOTFI DATE : 03/23
DESIGN ENGINEER OF RECORD: M.M. AHMED DATE : 3/2025

6/26/2025
R:\Structures\Plans\401_065_BR0090_SMU_Eb2_S-33_630036.dgn
aabraha

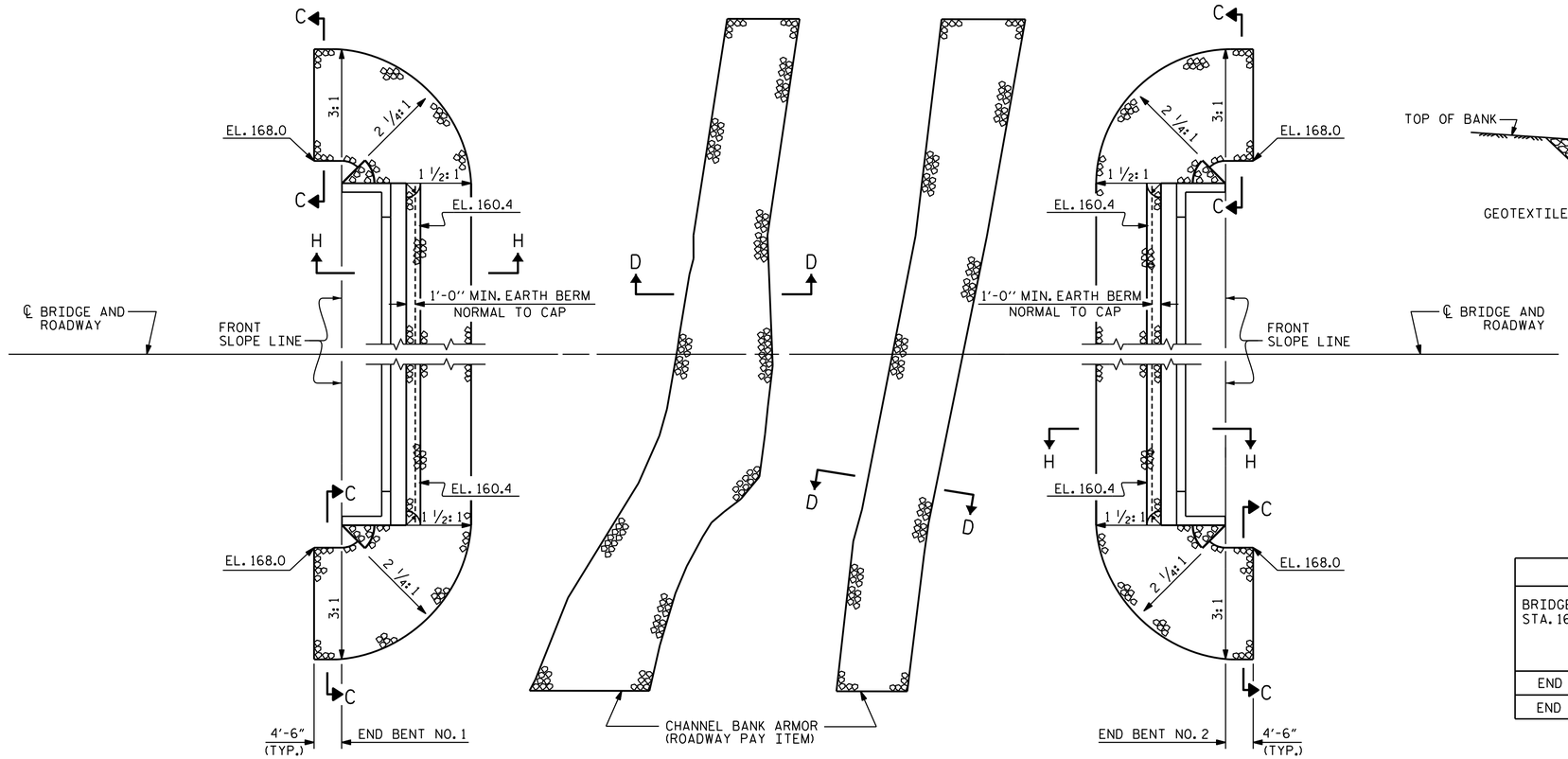

NOTES :

FOR BERM WIDTH DIMENSIONS, SEE GENERAL DRAWING.

UNCLASSIFIED STRUCTURE EXCAVATION

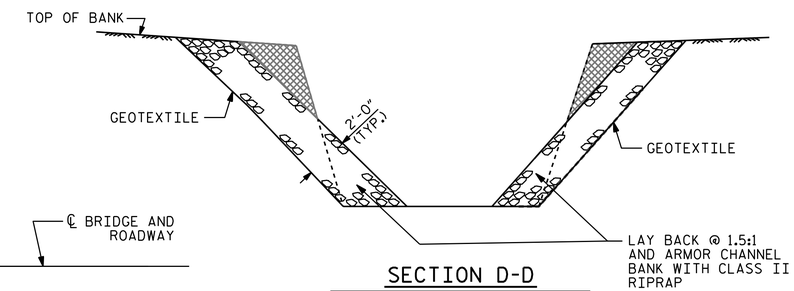

SECTION D-D

FROM STA.15+91(RT) TO 16+51(LT)
FROM STA.16+80(RT) TO 17+22(LT)

ESTIMATED QUANTITIES		
BRIDGE @ STA. 16+54.00 -L-	RIP RAP CLASS II (2'-0" THICK)	GEOTEXTILE FOR DRAINAGE
	TONS	SQUARE YARDS
END BENT 1	346	384
END BENT 2	336	374

SHOULDER RIP RAP IS HIGHER THAN BERM RIP RAP

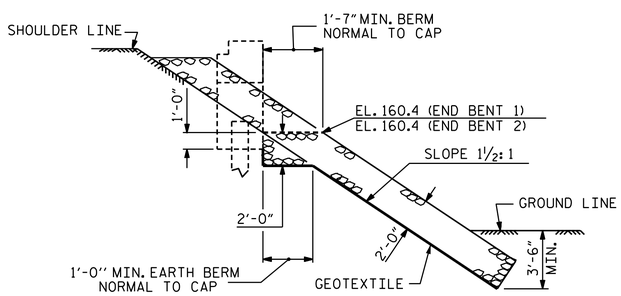

SECTION H-H

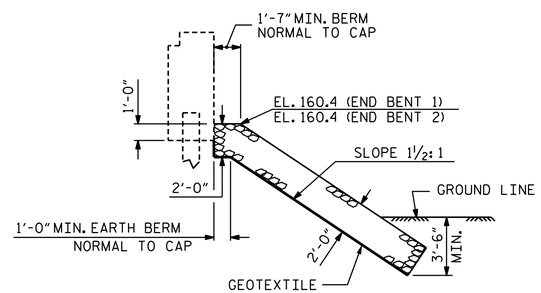

℄ SECTION

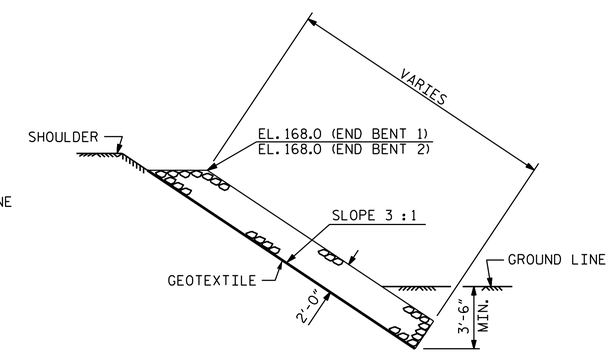

SECTION C-C

PROJECT NO. BR-0090
NASH COUNTY
STATION: 16+54.00 -L-

STATE OF NORTH CAROLINA
DEPARTMENT OF TRANSPORTATION
RALEIGH

RIP RAP DETAILS

NORTH CAROLINA PROFESSIONAL SEAL 030024 ENGINEER ASTER G. ABRAHA
DocuSigned by: Aster Abraha
06/26/2025

DOCUMENT NOT CONSIDERED FINAL UNLESS ALL SIGNATURES COMPLETED

REVISIONS						
NO.	BY:	DATE:	NO.	BY:	DATE:	
1			3			
2			4			

SHEET NO. S-34
TOTAL SHEETS 35

ASSEMBLED BY : S. WANCE		DATE : 01/2023	
CHECKED BY : M. AHMED		DATE : 4/2025	
DRAWN BY : REK 1/84	REV. 10/1/11	MAA/GM	
CHECKED BY : RDU 1/84	REV. 12/21/11	MAA/GM	
	REV. 12/17	MAA/THC	

5/7/2025
V:\Structures\Plans\401_067_BR0090_SMU_RR_S-34_630036.dgn
mmahmed

STD. NO. RR1

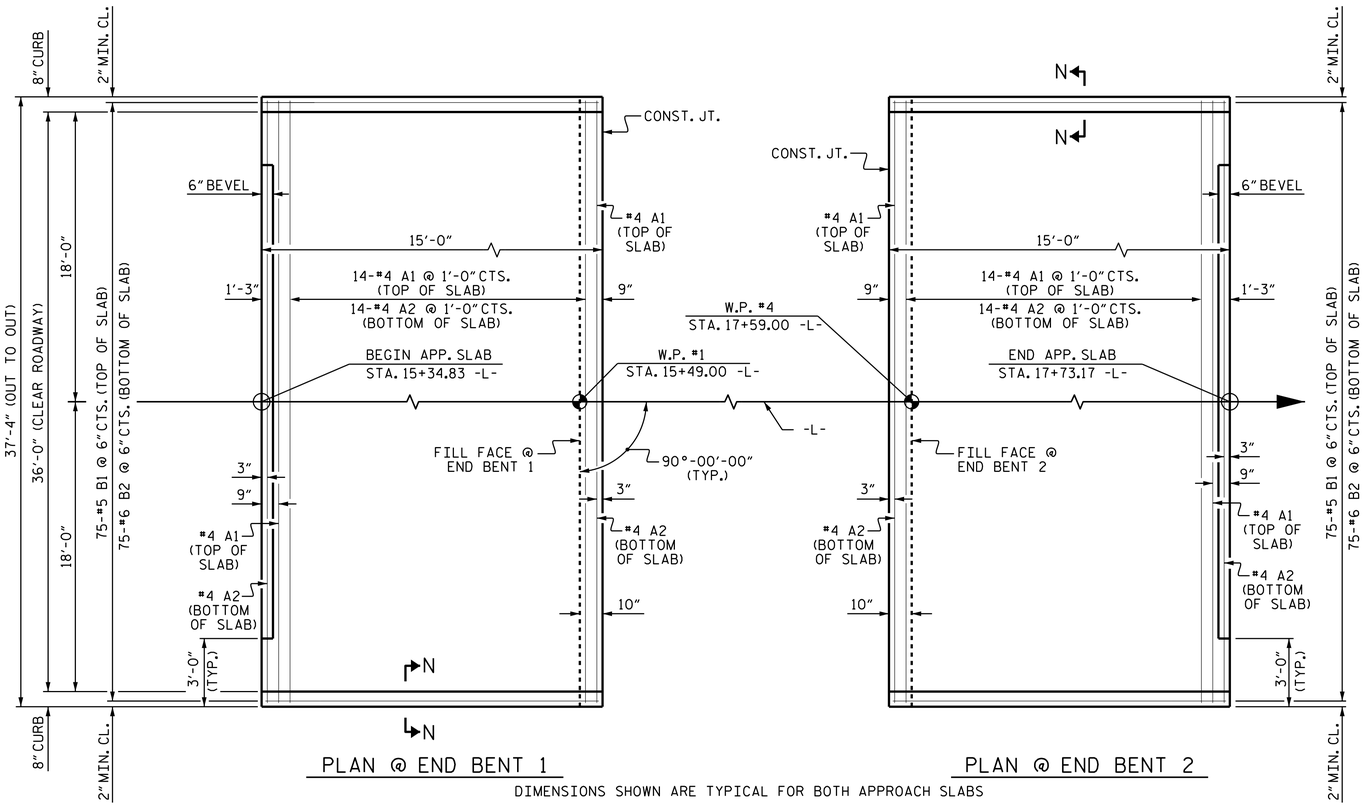

NOTES

FOR BRIDGE APPROACH FILL, SEE ROADWAY PLANS.

APPROACH SLAB SHALL NOT BE CONSTRUCTED PRIOR TO COMPLETION OF THE BRIDGE DECK.

AREA BETWEEN THE WINGWALL AND APPROACH SLAB SHALL BE GRADED TO DRAIN THE WATER AWAY FROM THE FILL FACE OF THE BRIDGE AND SHALL BE PAVED. SEE ROADWAY PLANS.

THE JOINT OPENING AT THE APPROACH SLAB/DECK INTERFACE SHALL BE SAWED NO MORE THAN 12 HOURS AFTER THE APPROACH SLAB IS CAST. THE JOINT SHALL BE CLEANED OF ALL DEBRIS BEFORE THE SEALANT IS APPLIED. THE JOINT SEALER MATERIAL SHALL CONFORM TO THE REQUIREMENTS OF SECTION 1028-3 OF THE STANDARD SPECIFICATIONS.

AT THE CONTRACTORS OPTION "TYPE 1A - ALTERNATE APPROACH FILL" (ROADWAY STD. 423.02) MAY BE CONSTRUCTED AT NO ADDITIONAL COST TO THE DEPARTMENT IN LIEU OF "TYPE 1 - APPROACH FILL".

BILL OF MATERIAL

FOR ONE APPROACH SLAB (2 REQ'D)

BAR	NO.	SIZE	TYPE	LENGTH	WEIGHT
* A1	16	#4	STR	37'-0"	395
A2	16	#4	STR	37'-0"	395
* B1	75	#5	STR	14'-2"	1108
B2	75	#6	STR	14'-8"	1652
REINFORCING STEEL				LBS.	2047
* EPOXY COATED REINFORCING STEEL				LBS.	1503
CLASS AA CONCRETE				C.Y.	24.1

SPLICE LENGTHS

BAR SIZE	EPOXY COATED	UNCOATED
#4	1'-11"	1'-7"
#5	2'-5"	2'-0"
#6	3'-7"	2'-5"

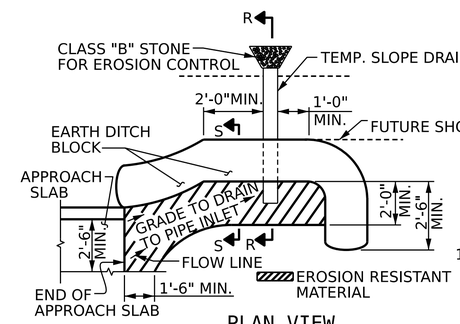

PLAN VIEW

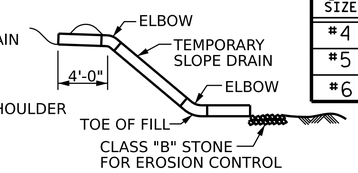

SECTION R-R

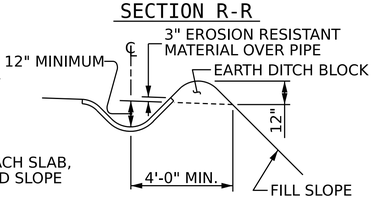

SECTION S-S

NOTE:

IMMEDIATELY AFTER THE CONSTRUCTION OF THE APPROACH SLAB, THE CONTRACTOR SHALL PROVIDE TEMPORARY BERM AND SLOPE DRAIN. CONTRACTOR SHALL GRADE TO PIPE INLET AND PROVIDE EROSION RESISTANT MATERIAL AS SHOWN. THE EROSION RESISTANT MATERIAL SHALL BE EITHER 1) ASPHALT PLANT MIX, TYPE 1 OR TYPE 2, MIN. 2" DEPTH, 2) EROSION CONTROL MAT, OR 3) CONCRETE, AS DIRECTED BY THE ENGINEER. THE SLOPE DRAIN SHALL CONSIST OF A NON-PERFORATED TEMPORARY DRAINAGE PIPE, 12 INCHES IN DIAMETER.

TEMPORARY BERM AND SLOPE DRAIN DETAILS

(TO BE USED WHEN SHOULDER BERM GUTTER IS REQUIRED)

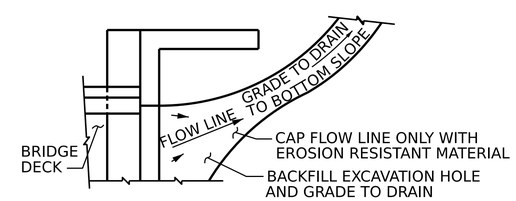

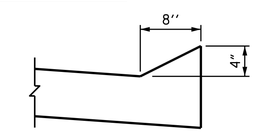

SECTION N-N

NOTE: IF THE APPROACH SLAB IS NOT CONSTRUCTED IMMEDIATELY AFTER THE BACKFILLING OF THE END BENT EXCAVATION, GRADE TO DRAIN TO THE BOTTOM OF THE SLOPE AND PROVIDE EROSION RESISTANT MATERIAL, SUCH AS FIBERGLASS ROVING OR AS DIRECTED BY THE ENGINEER TO PREVENT SOIL EROSION AND TO PROTECT THE AREA ADJACENT TO THE STRUCTURE. THE CONTRACTOR WILL BE REQUIRED TO REMOVE THESE MATERIALS PRIOR TO CONSTRUCTION OF THE APPROACH SLAB.

TEMPORARY DRAINAGE DETAIL

PROJECT NO. BR-0090

NASH COUNTY

STATION: 16+54.00 -L-

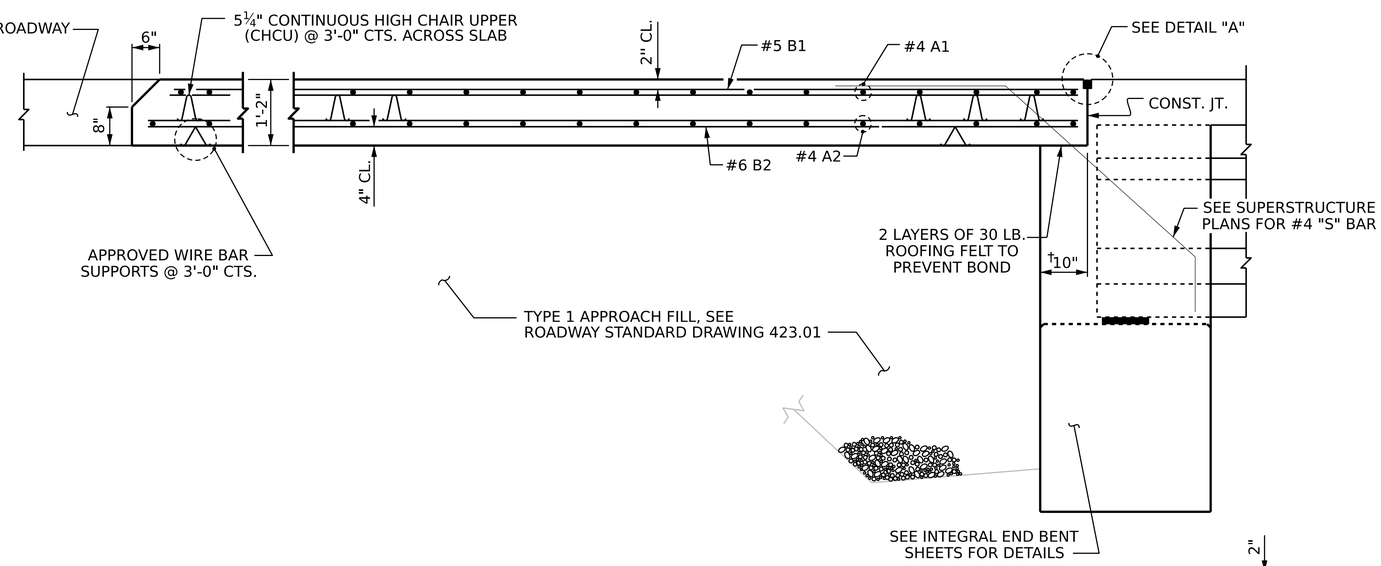

† NORMAL TO END BENT

SECTION THRU SLAB

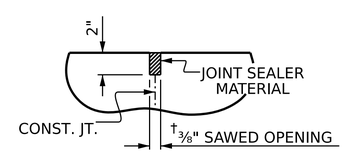

DETAIL "A"

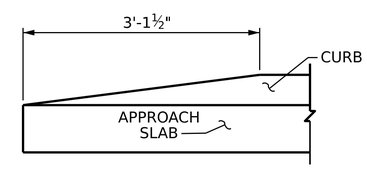

END OF CURB WITHOUT SHOULDER BERM GUTTER

NORTH CAROLINA PROFESSIONAL SEAL 030024 ENGINEER ASTER GHALI ABRAHA

06/26/2023

STATE OF NORTH CAROLINA
DEPARTMENT OF TRANSPORTATION
RALEIGH

BRIDGE APPROACH SLAB FOR INTEGRAL ABUTMENT WITH FLEXIBLE PAVEMENT

ASSEMBLED BY: S. WANCE/A. ABRAHA DATE: 01/2023
CHECKED BY: M. AHMED DATE: 4/2025

DRAWN BY: TLA 10/05
CHECKED BY: GM 5/06

REV. 12/17 MAA/THC
REV. 06/19 BNB/THC
REV. 01/23 BNB/SNM

DOCUMENT NOT CONSIDERED FINAL UNLESS ALL SIGNATURES COMPLETED

REVISIONS								SHEET NO.
NO.	BY:	DATE:	NO.	BY:	DATE:			S-35
1			3					TOTAL SHEETS
2			4					35

STD. NO. BAS5

4/16/2025
R:\Structures\Plans\401_069_BR0090_SMU_AS_S-35_630036.dgn
aabraha

4/16/2025
R:\Structures\Plans\401_069_BR0090_SMU_AS_S-35_630036.dgn
aabraha

8/26/21

STANDARD NOTES

DESIGN DATA:

SPECIFICATIONS	AASHTO (CURRENT)
LIVE LOAD	SEE PLANS
IMPACT ALLOWANCE	SEE AASHTO
STRESS IN EXTREME FIBER OF STRUCTURAL STEEL - AASHTO M270 GRADE 36	20,000 LBS. PER SQ. IN.
- AASHTO M270 GRADE 50W	27,000 LBS. PER SQ. IN.
- AASHTO M270 GRADE 50	27,000 LBS. PER SQ. IN.
REINFORCING STEEL IN TENSION - GRADE 60	24,000 LBS. PER SQ. IN.
CONCRETE IN COMPRESSION	1,200 LBS. PER SQ. IN.
CONCRETE IN SHEAR	SEE AASHTO
STRUCTURAL TIMBER - TREATED OR UNTREATED EXTREME FIBER STRESS	1,800 LBS. PER SQ. IN.
COMPRESSION PERPENDICULAR TO GRAIN OF TIMBER	375 LBS. PER SQ. IN.
EQUIVALENT FLUID PRESSURE OF EARTH	30 LBS. PER CU. FT. (MINIMUM)

MATERIAL AND WORKMANSHIP:

EXCEPT AS MAY OTHERWISE BE SPECIFIED ON PLANS OR IN THE SPECIAL PROVISIONS, ALL MATERIAL AND WORKMANSHIP SHALL BE IN ACCORDANCE WITH THE 2024 "STANDARD SPECIFICATIONS FOR ROADS AND STRUCTURES" OF THE N. C. DEPARTMENT OF TRANSPORTATION.

STEEL SHEET PILING FOR PERMANENT OR TEMPORARY APPLICATIONS SHALL BE HOT ROLLED.

CONCRETE:

UNLESS OTHERWISE REQUIRED ON PLANS, CLASS A CONCRETE SHALL BE USED FOR ALL PORTIONS OF ALL STRUCTURES WITH THE EXCEPTION THAT: CLASS AA CONCRETE SHALL BE USED IN BRIDGE SUPERSTRUCTURES, ABUTMENT BACKWALLS, AND APPROACH SLABS; AND CLASS B CONCRETE SHALL BE USED FOR SLOPE PROTECTION AND RIP RAP.

CONCRETE CHAMFERS:

UNLESS OTHERWISE NOTED ON THE PLANS, ALL EXPOSED CORNERS ON STRUCTURES SHALL BE CHAMFERED ¾" WITH THE FOLLOWING EXCEPTIONS: TOP CORNERS OF CURBS MAY BE ROUNDED TO 1½" RADIUS WHICH IS BUILT INTO CURB FORMS; CORNERS OF TRANSVERSE FLOOR EXPANSION JOINTS SHALL BE ROUNDED WITH A ¼" FINISHING TOOL UNLESS OTHERWISE REQUIRED ON PLANS; AND CORNERS OF EXPANSION JOINTS IN THE ROADWAY FACES AND TOPS OF CURBS AND SIDEWALKS SHALL BE ROUNDED TO A ¼" RADIUS WITH A FINISHING STONE OR TOOL UNLESS OTHERWISE REQUIRED ON PLANS.

DOWELS:

DOWELS WHEN INDICATED ON PLANS AS FOR CULVERT EXTENSIONS, SHALL BE EMBEDDED AT LEAST 12" INTO THE OLD CONCRETE AND GROUTED INTO PLACE WITH 1:2 CEMENT MORTAR.

ALLOWANCE FOR DEAD LOAD DEFLECTION, SETTLEMENT, ETC. IN CASTING SUPERSTRUCTURES:

BRIDGES SHALL BE BUILT ON THE GRADE OR VERTICAL CURVE SHOWN ON PLANS. SLABS, CURBS AND PARAPETS SHALL CONFORM TO THE GRADE OR CURVE.

ALL DIMENSIONS WHICH ARE GIVEN IN SECTION AND ARE AFFECTED BY DEAD LOAD DEFLECTIONS ARE DIMENSIONS AT CENTER LINE OF BEARING UNLESS OTHERWISE NOTED ON PLANS. IN SETTING FORMS FOR STEEL BEAM BRIDGES AND PRESTRESSED CONCRETE GIRDER BRIDGES, ADJUSTMENTS SHALL BE MADE DUE TO THE DEAD LOAD DEFLECTIONS FOR THE ELEVATIONS SHOWN. WHERE BLOCKS ARE SHOWN OVER BEAMS FOR BUILDING UP TO THE SLAB, THE VERTICAL DIMENSIONS OF THE BLOCKS SHALL BE ADJUSTED BETWEEN BEARINGS TO COMPENSATE FOR DEAD LOAD DEFLECTIONS, VERTICAL CURVE ORDINATE, AND ACTUAL BEAM CAMBER. WHERE BOTTOM OF SLAB IS IN LINE WITH BOTTOM OF TOP FLANGES, DEPTH OF SLAB BETWEEN BEARINGS SHALL BE ADJUSTED TO COMPENSATE FOR DEAD LOAD DEFLECTION, VERTICAL CURVE ORDINATE, AND ACTUAL BEAM CAMBER.

IN SETTING FALSEWORK AND FORMS FOR REINFORCED CONCRETE SPANS, AN ALLOWANCE SHALL BE MADE FOR DEAD LOAD DEFLECTIONS, SETTLEMENT OF FALSEWORK, AND PERMANENT CAMBER WHICH SHALL BE PROVIDED FOR IN ADDITION TO THE ELEVATIONS SHOWN. AFTER REMOVAL OF THE FALSEWORK, THE FINISHED STRUCTURES SHALL CONFORM TO THE PROFILE AND ELEVATIONS SHOWN ON THE PLANS AND CONSTRUCTION ELEVATIONS FURNISHED BY THE ENGINEER.

DETAILED DRAWINGS FOR FALSEWORK OR FORMS FOR BRIDGE SUPERSTRUCTURE AND ANY STRUCTURE OR PARTS OF A STRUCTURE AS NOTED ON THE PLANS SHALL BE SUBMITTED TO THE ENGINEER FOR APPROVAL BEFORE CONSTRUCTION OF THE FALSEWORK OR FORMS IS STARTED.

REINFORCING STEEL:

ALL REINFORCING STEEL SHALL BE DEFORMED. DIMENSIONS RELATIVE TO PLACEMENT OF REINFORCING ARE TO CENTERS OF BARS UNLESS OTHERWISE INDICATED IN THE PLANS. DIMENSIONS ON BAR DETAILS ARE TO CENTERS OF BARS OR ARE OUT TO OUT AS INDICATED ON PLANS.

WIRE BAR SUPPORTS SHALL BE PROVIDED FOR REINFORCING STEEL WHERE INDICATED ON THE PLANS. WHEN BAR SUPPORT PIECES ARE PLACED IN CONTINUOUS LINES, THEY SHALL BE SO PLACED THAT THE ENDS OF THE SUPPORTING WIRES SHALL BE LAPPED TO LOCK LEGS ON ADJOINING PIECES.

STRUCTURAL STEEL:

AT THE CONTRACTOR'S OPTION, HE MAY SUBSTITUTE ⅞" ∅ SHEAR STUDS FOR THE ¾" ∅ STUDS SPECIFIED ON THE PLANS. THIS SUBSTITUTION SHALL BE MADE AT THE RATE OF 3 - ⅞" ∅ STUDS FOR 4 - ¾" ∅ STUDS, AND STUD SPACING CHANGES SHALL BE MADE AS NECESSARY TO PROVIDE THE SAME EQUIVALENT NUMBER OF ⅞" ∅ STUDS ALONG THE BEAM AS SHOWN FOR ¾" ∅ STUDS BASED ON THE RATIO OF 3 - ⅞"∅ STUDS FOR 4 - ¾" ∅ STUDS. STUDS OF THE LENGTH SPECIFIED ON THE PLANS MUST BE PROVIDED. THE MAXIMUM SPACING SHALL BE 2'-0".

EXCEPT AT THE INTERIOR SUPPORTS OF CONTINUOUS BEAMS WHERE THE COVER PLATE IS IN CONTACT WITH BEARING PLATE, THE CONTRACTOR MAY, AT HIS OPTION, SUBSTITUTE FOR THE COVER PLATES DESIGNATED ON THE PLANS COVER PLATES OF THE EQUIVALENT AREA PROVIDED THESE PLATES ARE AT LEAST 5/16" IN THICKNESS AND DO NOT EXCEED A WIDTH EQUAL TO THE FLANGE WIDTH LESS 2" OR A THICKNESS EQUAL TO 2 TIMES THE FLANGE THICKNESS. THE SIZE OF FILLET WELDS SHALL CONFORM TO THE REQUIREMENTS OF THE CURRENT ANSI/AASHTO/AWS "BRIDGE WELDING CODE". ELECTROSLAG WELDING WILL NOT BE PERMITTED.

WITH THE SOLE EXCEPTION OF EDGES AT SURFACES WHICH BEAR ON OTHER SURFACES, ALL SHARP EDGES AND ENDS OF SHAPES AND PLATES SHALL BE SLIGHTLY ROUNDED BY SUITABLE MEANS TO A RADIUS OF APPROXIMATELY 1/16" OR EQUIVALENT FLAT SURFACE AT A SUITABLE ANGLE PRIOR TO PAINTING, GALVANIZING, OR METALLIZING.

HANDRAILS AND POSTS:

METAL STANDARDS AND FACES OF THE CONCRETE END POSTS FOR THE METAL RAIL SHALL BE SET NORMAL TO THE GRADE OF THE CURB, UNLESS OTHERWISE SHOWN ON PLANS. THE METAL RAIL AND TOPS OF CONCRETE POSTS USED WITH THE ALUMINUM RAIL SHALL BE BUILT PARALLEL TO THE GRADE OF THE CURB.

METAL HANDRAILS SHALL BE IN ACCORDANCE WITH THE PLANS. RAILS SHALL BE AS MANUFACTURED FOR BRIDGE RAILING. CASTINGS SHALL BE OF A UNIFORM APPEARANCE. FINS AND OTHER DEFORMATIONS RESULTING FROM CASTING OR OTHERWISE SHALL BE REMOVED IN A MANNER SO THAT A UNIFORM COLORING OF THE COMPLETED CASTING SHALL BE OBTAINED. CASTINGS WITH DISCOLORATIONS OR OF NON-UNIFORM COLORING WILL NOT BE ACCEPTED. CERTIFIED MILL REPORTS ARE REQUIRED FOR METAL RAILS AND POSTS.

SPECIAL NOTES:

GENERALLY, IN CASE OF DISCREPANCY, THIS STANDARD SHEET OF NOTES SHALL GOVERN OVER THE SPECIFICATIONS, BUT THE REMAINDER OF THE PLANS SHALL GOVERN OVER NOTES HEREON, AND SPECIAL PROVISIONS SHALL GOVERN OVER ALL. SEE SPECIFICATIONS ARTICLE 105-4.