Project No.	Sheet No.
U–5798B	Sig. 1.0

STATE OF NORTH CAROLINA
DIVISION OF HIGHWAYS

CUMBERLAND COUNTY

Project: U–5798B

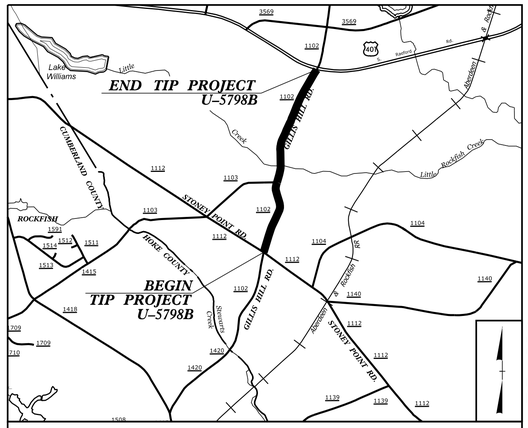

VICINITY MAP N.T.S

90% PLANS

NAD 83/
NA 2011

LOCATION: SR 1102 (GILLIS HILL ROAD) FROM SR 1418 (LINDSAY ROAD) TO NORTH OF SR 1112 (STONEY POINT ROAD). WIDEN TO MULTI–LANES.

TYPE OF WORK: TRAFFIC SIGNALS

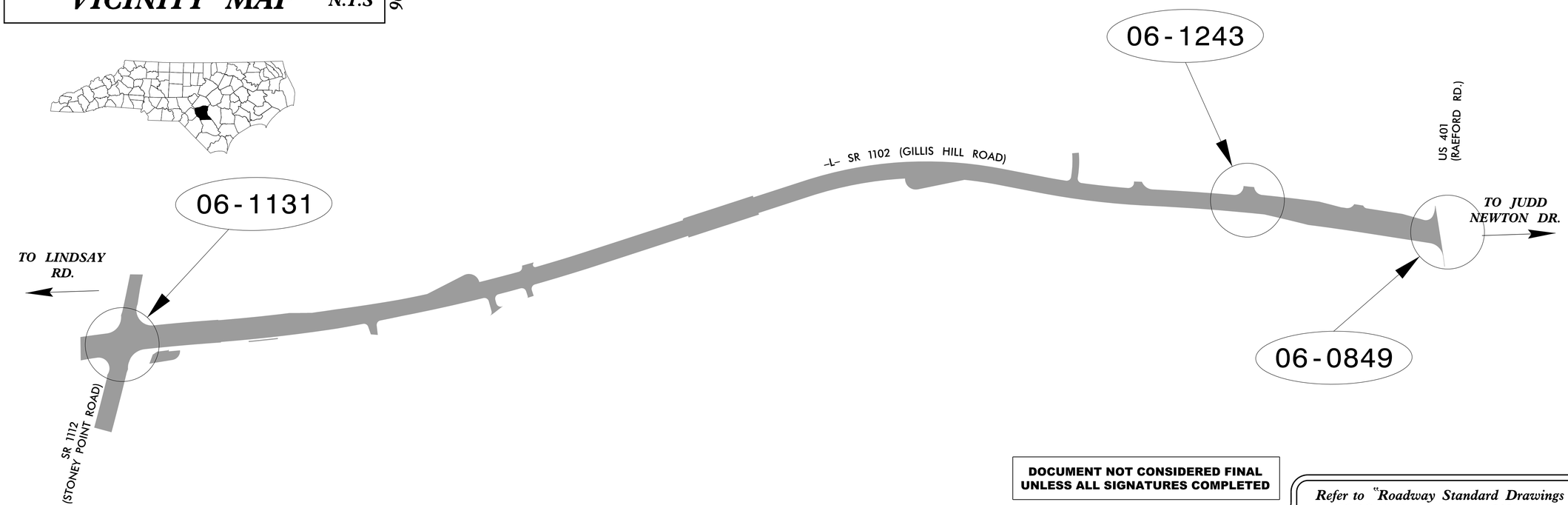

DOCUMENT NOT CONSIDERED FINAL UNLESS ALL SIGNATURES COMPLETED

Index of Plans

Sheet #	Reference #	Location/Description
Sig. 1.0	N/A	Title Sheet
Sig. 2.0–2.3	06–1131 T1	US 401 (S Raeford Road) at SR 1102 (Gillis Hill Road)
Sig. 3.0–3.3	06–1131 T2	US 401 (S Raeford Road) at SR 1102 (Gillis Hill Road)
Sig. 4.0–4.3	06–1131	US 401 (S Raeford Road) at SR 1102 (Gillis Hill Road)
Sig. 5.0–5.2	06–0849	SR 1102 (Gillis Hill Road) at Shopping Center Driveway
Sig. 6.0–6.3	06–1243	SR 1102 (Gillis Hill Road) at SR 1112 (Stoney Point Road)
Sig. M1A – M9	N/A	Standard Drawings for All Metal Poles

INTELLIGENT TRANSPORTATION AND SIGNALS UNIT

Contacts:

Zachary Little, PE – Eastern Region Signals Project Engineer
D. Todd Joyce, PE – Signal Equipment Design Engineer
Gregory A. Green – Signal Communications Project Engineer

Refer to "Roadway Standard Drawings NCDOT" dated January 2024 and "Standard Specifications for Roads and Structures" dated January 2024.

Prepared in the Office of:

RS&H
NC FIRM LICENSE No. F-0261
8521 SIX FORKS ROAD, SUITE 400
RALEIGH, NC 27615
(919) 878-4180

Transportation Mobility and Safety Division
STATE OF NORTH CAROLINA DEPARTMENT OF TRANSPORTATION
ITS and Signals Unit
750 N. Greenfield Parkway, Garner, NC 27529

SYTME$$$$
CONF$$$$
PRAME$$$$

Docusign Envelope ID: 996831A4-A229-401E-B3E7-9B9D356189B2

PROJECT REFERENCE NO.	SHEET NO.
U-5798B	Sig. 2.0

PHASING DIAGRAM

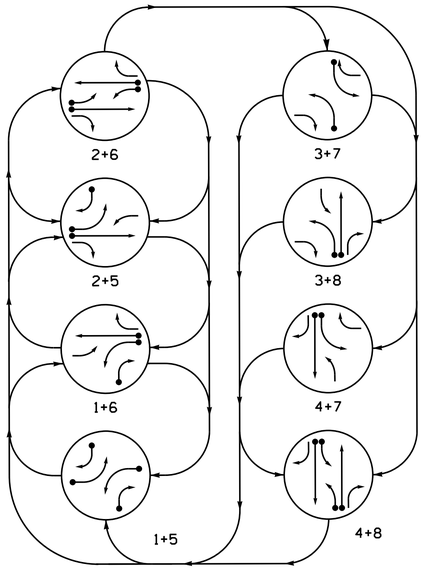

PHASING DIAGRAM DETECTION LEGEND

- DETECTED MOVEMENT
- UNDETECTED MOVEMENT (OVERLAP)
- UNSIGNALIZED MOVEMENT
- PEDESTRIAN MOVEMENT

DEFAULT TABLE OF OPERATION

SIGNAL FACE	PHASE 1+5	1+6	2+5	2+6	3+7	3+8	4+7	4+8	FLASH
11	—	—	F/Y	F/Y	~~R~~	~~R~~	~~R~~	~~R~~	~~R~~
21, 22	R	R	G	G	R	R	R	R	R
23	R	R	F/Y	F/Y	F/Y	F/Y	R	R	R
31	~~R~~	~~R~~	~~R~~	~~R~~	—	—	F/Y	F/Y	~~R~~
41	R	R	R	R	R	R	G	G	R
42	R/	R	R/	R	R	R	G	G	R
51	—	F/Y	—	F/Y	~~R~~	~~R~~	~~R~~	~~R~~	~~R~~
61, 62	R	G	R	G	R	R	R	R	R
63	R	F/Y	R	F/Y	F/Y	R	F/Y	R	R
71	~~R~~	~~R~~	~~R~~	~~R~~	—	F/Y	—	F/Y	~~R~~
81	R	R	R	R	R	G	R	G	R
82	R/	R/	R	R	R	G	R	G	R

SIGNAL FACE I.D.

All Heads L.E.D.

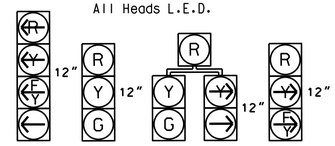

ALTERNATE TABLE OF OPERATION

SIGNAL FACE	PHASE 1+5	1+6	2+5	2+6	3+7	3+8	4+7	4+8	FLASH
11	—	—	~~R~~	~~R~~	~~R~~	~~R~~	~~R~~	~~R~~	~~R~~
21, 22	R	R	G	G	R	R	R	R	R
23	R	R	F/Y	F/Y	F/Y	F/Y	R	R	R
31	~~R~~	~~R~~	~~R~~	~~R~~	—	—	~~R~~	~~R~~	~~R~~
41	R	R	R	R	R	R	G	G	R
42	R/	R	R/	R	R	R	G	G	R
51	—	~~R~~	—	~~R~~	~~R~~	~~R~~	~~R~~	~~R~~	~~R~~
61, 62	R	G	R	G	R	R	R	R	R
63	R	F/Y	R	F/Y	F/Y	R	F/Y	R	R
71	~~R~~	~~R~~	~~R~~	~~R~~	—	~~R~~	—	~~R~~	~~R~~
81	R	R	R	R	R	G	R	G	R
82	R/	R/	R	R	R	G	R	G	R

ALTERNATE PHASING DIAGRAM

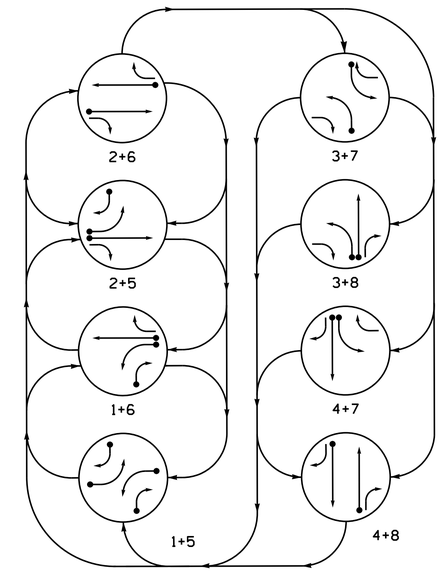

PHASING DIAGRAM DETECTION LEGEND

- DETECTED MOVEMENT
- UNDETECTED MOVEMENT (OVERLAP)
- UNSIGNALIZED MOVEMENT
- PEDESTRIAN MOVEMENT

8 Phase Fully Actuated Fayetteville Signal System NOTES

1. Refer to "Roadway Standard Drawings NCDOT" dated January 2024 and "Standard Specifications for Roads and Structures" dated January 2024.
2. Do not program signal for late night flashing operation unless otherwise directed by the Engineer.
3. Phase 1 and/or phase 5 may be lagged.
4. Phase 3 and/or phase 7 may be lagged.
5. Set all detector units to presence mode.
6. Install new controller in existing cabinet.
7. See U-5798B PMP for pavement markings.
8. The Division Traffic Engineer will determine the hours of use for each phasing plan.
9. This intersection uses multi-zone microwave detection. Install detectors according to the manufacturer's instructions to achieve the desired detection.
10. Maximum times shown in timing chart are for free-run operation only. Coordinated signal system timing values supersede these values.

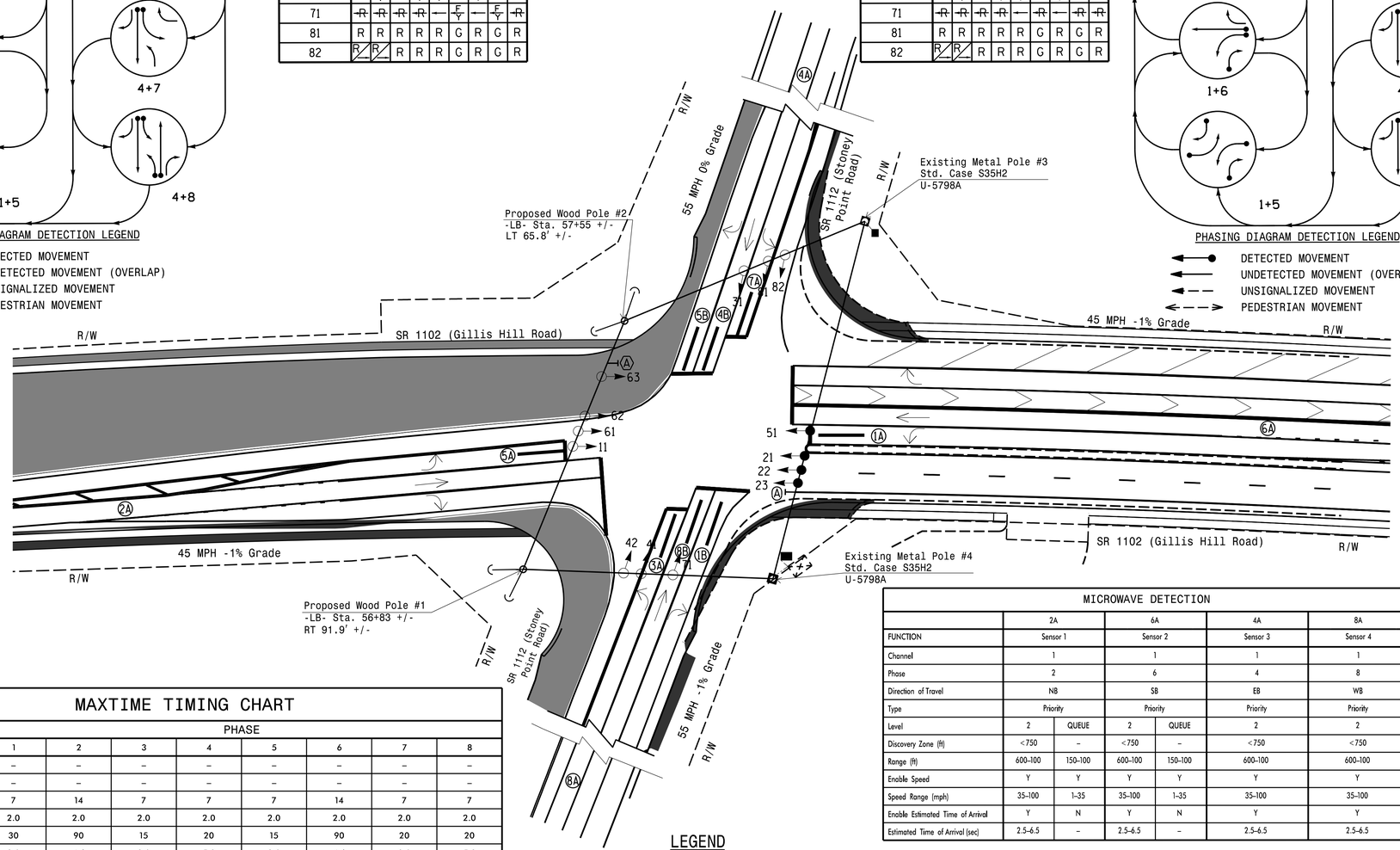

MAXTIME DETECTOR INSTALLATION CHART

DETECTOR					PROGRAMMING							
LOOP	SIZE (FT)	DISTANCE FROM STOPBAR (FT)	TURNS	NEW LOOP	CALL PHASE	DELAY TIME	EXTEND TIME	EXTEND	ADDED INITIAL	CALL	DELAY DURING GREEN	NEW CARD
1A	6X40	0	✱	✱	1	15+	-	X	-	X	-	✱
					6ⓠ	-	-	X	-	X	-	✱
1B	6X40	0	✱	✱	1	15	-	X	-	X	-	✱
3A	6X40	0	✱	✱	3	15+	-	X	-	X	-	✱
					8ⓠ	3	-	X	-	X	-	✱
4B	6X40	0	✱	✱	4	-	-	X	-	X	-	✱
5A	6X40	0	✱	✱	5	15+	-	X	-	X	-	✱
					2ⓠ	-	-	X	-	X	-	✱
5B	6X40	0	✱	✱	5	15	-	X	-	X	-	✱
7A	6X40	0	✱	✱	7	15+	-	X	-	X	-	✱
					4ⓠ	3	-	X	-	X	-	✱
8B	6X40	0	✱	✱	8	-	-	X	-	X	-	✱

✱ Denotes Microwave Detection
+ Reduce delay to 3 seconds during Alternate Phasing Operation
ⓠ Disable call during Alternate Phasing Operation

MICROWAVE DETECTION

	2A		6A		4A	8A
FUNCTION	Sensor 1		Sensor 2		Sensor 3	Sensor 4
Channel	1		1		1	1
Phase	2		6		4	8
Direction of Travel	NB		SB		EB	WB
Type	Priority		Priority		Priority	Priority
Level	2	QUEUE	2	QUEUE	2	2
Discovery Zone (ft)	<750	–	<750	–	<750	<750
Range (ft)	600–100	150–100	600–100	150–100	600–100	600–100
Enable Speed	Y	Y	Y	Y	Y	Y
Speed Range (mph)	35–100	1–35	35–100	1–35	35–100	35–100
Enable Estimated Time of Arrival	Y	N	Y	N	Y	Y
Estimated Time of Arrival (sec)	2.5–6.5	–	2.5–6.5	–	2.5–6.5	2.5–6.5

MAXTIME TIMING CHART

FEATURE	PHASE 1	2	3	4	5	6	7	8
Walk *	–	–	–	–	–	–	–	–
Ped Clear	–	–	–	–	–	–	–	–
Min Green *	7	14	7	7	7	14	7	7
Passage *	2.0	2.0	2.0	2.0	2.0	2.0	2.0	2.0
Max 1 *	30	90	15	20	15	90	20	20
Yellow Change	3.0	4.6	3.0	5.3	3.0	4.6	3.0	5.3
Red Clear	3.3	2.2	1.9	1.2	3.8	2.2	2.4	1.2
Added Initial *	–	–	–	–	–	–	–	–
Maximum Initial *	–	–	–	–	–	–	–	–
Time Before Reduction *	–	–	–	–	–	–	–	–
Time To Reduce *	–	–	–	–	–	–	–	–
Minimum Gap	–	–	–	–	–	–	–	–
Advance Walk	–	–	–	–	–	–	–	–
Non Lock Detector	X	–	X	X	X	–	X	X
Vehicle Recall	–	MIN RECALL	–	–	–	MIN RECALL	–	–
Dual Entry	–	–	–	X	–	–	–	X

* These values may be field adjusted. Do not adjust Min Green and Passage times for phases 2 and 6 lower than what is shown. Min Green for all other phases should not be lower than 4 seconds.

LEGEND

PROPOSED		EXISTING
	Traffic Signal Head	
	Modified Signal Head	N/A
	Sign	
	Pedestrian Signal Head	
	Signal Pole with Guy	
	Signal Pole with Sidewalk Guy	
	Inductive Loop Detector	
	Controller & Cabinet	
	Junction Box	
	Oversized Junction Box	
	2-in Underground Conduit	

PROPOSED		EXISTING
N/A	Right of Way	
	Directional Arrow	
	Perm. Utility Easement	N/A
	Right Arrow "ONLY" Sign (R3-5R)	
	Strain Pole	
	Construction Zone	
	Out of Pavement Detection Zone	

RS&H
NC FIRM LICENSE No: F-0493
8521 SIX FORKS ROAD, SUITE 400
RALEIGH, NC 27615
(919) 926-4100

Temporary Signal 1 - TCP Phase II Step 1 & TCP Phase III Step 1

Prepared for the Offices of: Transportation Mobility and Safety Division, Signal Design Section, STATE OF NORTH CAROLINA DEPARTMENT OF TRANSPORTATION
750 N.Greenfield Pkwy,Garner,NC 27529

SR 1102 (Gillis Hill Road) at SR 1112 (Stoney Point Road)

Division 6 Cumberland County Fayetteville

PLAN DATE: June 2025 REVIEWED BY: S.G. Haynie
PREPARED BY: G. M. Moreau REVIEWED BY: _____

SCALE 0 40 1"=40'

REVISIONS | INIT. | DATE

DOCUMENT NOT CONSIDERED FINAL UNLESS ALL SIGNATURES COMPLETED

SEAL
NORTH CAROLINA PROFESSIONAL SEAL 029531 ENGINEER STEVEN G. HAYNIE

DocuSigned by: Steven G. Haynie 6/12/2025
SIGNATURE DATE

SIG. INVENTORY NO. 06-1131T1

$$$$USERNAME$$$
$$$$DGN$$$$

Docusign Envelope ID: 996831A4-A229-401E-B3E7-9B9D35618 9B2

PROJECT REFERENCE NO.	SHEET NO.
U-5798B	Sig. 2.1

18 CHANNEL IP CONFLICT MONITOR PROGRAMMING DETAIL

(remove jumpers and set switches as shown)

REMOVE DIODE JUMPERS 1-5, 1-6, 1-9, 1-11, 1-17, 2-5, 2-6, 2-9, 2-11, 2-17, 2-18, 3-7, 3-8, 3-10, 3-12, 3-17, 3-18, 4-7, 4-8, 4-10, 4-12, 4-17, 5-9, 5-11, 5-18, 6-9, 6-11, 6-17, 6-18, 7-10, 7-12, 7-17, 7-18, 8-10, 8-12, 8-18, 9-11, 9-17, 9-18, 10-12, 10-17, 10-18, 11-17, 11-18, 12-17, 12-18, and 17-18.

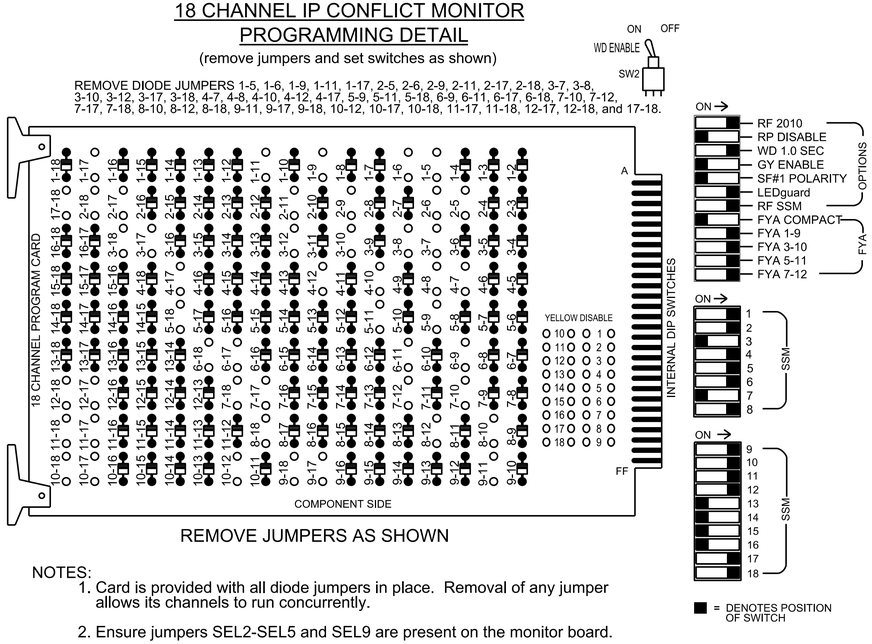

REMOVE JUMPERS AS SHOWN

NOTES:

1. Card is provided with all diode jumpers in place. Removal of any jumper allows its channels to run concurrently.
2. Ensure jumpers SEL2-SEL5 and SEL9 are present on the monitor board.
3. Ensure that the Red Enable is active at all times during normal operation.
4. Integrate monitor with Ethernet network in cabinet.

NOTES

1. To prevent "flash-conflict" problems, insert red flash program blocks for all vehicle load switches in the output file. The installer shall verify that signal heads flash in accordance with the signal plan.
2. Program phases 4 and 8 for Dual Entry.
3. Program controller to start up in phase 2 Green No Walk and 6 Green No Walk.
4. If this signal will be managed by an ATMS software, enable controller and detector logging for all detectors used at this location.
5. The cabinet and controller are part of the Fayetteville Signal System.

EQUIPMENT INFORMATION

Controller.....2070LX
Cabinet.....332 w/ Aux
Software.....Q-Free MAXTIME
Cabinet Mount.....Base
Output File Positions.....18 With Aux. Output File
Load Switches Used.....S1,S2,S4,S5,S7,S8,
S10,S11,AUX S1,AUX S2,
AUX S3,AUX S4,AUX S5,AUX S6
Phases Used.....1,2,3,4,5,6,7,8
Overlap "1".....*
Overlap "2".....*
Overlap "3".....*
Overlap "4".....*
Overlap "5".....*
Overlap "6".....*

*See overlap programming detail on sheet 2

SIGNAL HEAD HOOK-UP CHART

LOAD SWITCH NO.	S1		S2	S3	S4	S5	S6	S7		S8	S9	S10	S11	S12	AUX S1	AUX S2	AUX S3	AUX S4	AUX S5	AUX S6
CMU CHANNEL NO.	1		2	13	3	4	14	5		6	15	7	8	16	9	10	17	11	12	18
PHASE	1		2	2 PED	3	4	4 PED	5		6	6 PED	7	8	8 PED	OL1	OL2	OL5	OL3	OL4	OL6
SIGNAL HEAD NO.	11★	82	21,22	NU	31★	41,42	NU	42	51★	61,62	NU	71★	81,82	NU	11★	31★	63★	51★	71★	23★
RED		*	128			101		*		134			107				A111			A104
YELLOW			129		*	102				135		*	108							
GREEN			130			103				136			109							
RED ARROW															A121	A124		A114	A101	
YELLOW ARROW		126						132							A122	A125	A112	A115	A102	A105
FLASHING YELLOW ARROW															A123	A126	A113	A116	A103	A106
GREEN ARROW	127	127			118			133	133			124								

NU = Not Used

* Denotes install load resistor. See load resistor installation detail this sheet.

★See pictorial of head wiring in detail on sheet 2.

FLASHER CIRCUIT MODIFICATION DETAIL

In order to ensure that signals flash concurrently on the Same approach, make the following flasher circuit changes:

1. On rear of PDA - remove wire from Term. T2-4 and terminate on T2-2.
2. On rear of PDA - remove wire from Term. T2-5 and terminate on T2-3.
3. Remove flasher unit 2.

The changes listed above ties all phases and overlaps to flasher unit 1.

INPUT FILE POSITION LAYOUT

(front view)

		1	2	3	4	5	6	7	8	9	10	11	12	13	14
FILE "I"	U	ø 1	SLOT	SLOT	SLOT	ø 3	SLOT	SLOT	SLOT	SLOT	SLOT	SLOT	SLOT	SLOT	FS
		1A	EMPTY	EMPTY	EMPTY	3A	EMPTY	EMPTY	EMPTY	EMPTY	EMPTY	EMPTY	EMPTY	EMPTY	DC ISOLATOR
	L	NOT USED				NOT USED									ST
															DC ISOLATOR
FILE "J"	U	ø 5	SLOT	SLOT	SLOT	ø 7	SLOT	SLOT	SLOT	SLOT	SLOT	SLOT	SLOT	SLOT	SLOT
		5A	EMPTY	EMPTY	EMPTY	7A	EMPTY	EMPTY	EMPTY	EMPTY	EMPTY	EMPTY	EMPTY	EMPTY	EMPTY
	L	NOT USED				NOT USED									

EX. : 1A, 2A, ETC. = LOOP NO.'S

FS = FLASH SENSE
ST = STOP TIME

Note: Remove jumpers from I1-W to J4-W, I5-W to J8-W, J1-W to I4-W, and J5-W to I8-W if present.

INPUT FILE CONNECTION & PROGRAMMING CHART

LOOP NO.	LOOP TERMINAL	INPUT FILE POS.	PIN NO.	INPUT POINT	DETECTOR NO.	CALL PHASE	DELAY TIME	EXTEND TIME	EXTEND	ADDED INITIAL	CALL	DELAY DURING GREEN
1A	TB2-1,2	I1U	56	18	1★	1	15.0	---	X	_	X	_
				•	29★	6	--	---	X	_	X	_
3A	TB4-5,6	I5U	58	20	7★	3	15.0	---	X	_	X	_
				•	30★	8	3.0	---	X	_	X	_
5A	TB3-1,2	J1U	55	17	15★	5	15.0	---	X	_	X	_
				•	31★	2	--	---	X	_	X	_
7A	TB5-5,6	J5U	57	19	21★	7	15.0	---	X	_	X	_
				•	32★	4	3.0	---	X	_	X	_

★ See detector programming detail for alternate phasing on sheet 3.

INPUT FILE POSITION LEGEND: J2L
FILE J
SLOT 2
LOWER

LOAD RESISTOR INSTALLATION DETAIL

(install resistors as shown)

ACCEPTABLE VALUES	
Value (ohms)	Wattage
1.5K - 1.9K	25W (min)
2.0K - 3.0K	10W (min)

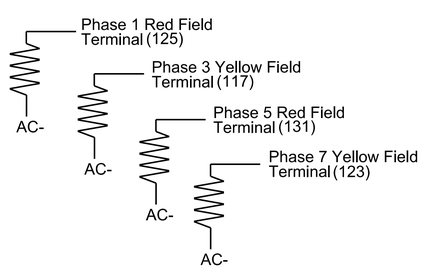

SPECIAL DETECTOR NOTE

Install a multi-zone microwave detection system for vehicle detection. Perform installation according to manufacturer's directions and NCDOT engineer -approved mounting locations to accomplish the detection schemes shown on the Signal Design Plans.

For Detection Zone 1A, 3A, 5A and 7A, the equipment placement is typical for a NCDOT installation.

THIS ELECTRICAL DETAIL IS FOR
THE SIGNAL DESIGN: 06-1131T1
DESIGNED: June 2025
SEALED: 6/12/2025
REVISED: _____

Signal Upgrade - Temporary Signal 1
Electrical Detail - Sheet 1 of 3

DOCUMENT NOT CONSIDERED FINAL UNLESS ALL SIGNATURES COMPLETED

ELECTRICAL AND PROGRAMMING DETAILS FOR:

SR 1102 (Gillis Hill Road)
at
SR 1112 (Stoney Point Road)

Division 6 Cumberland County Fayetteville

PLAN DATE: June 2025 REVIEWED BY: D. Drobny
PREPARED BY: S.G. Haynie REVIEWED BY: _____

REVISIONS	INIT.	DATE

SEAL

NORTH CAROLINA PROFESSIONAL SEAL 029531 ENGINEER STEVEN G. HAYNIE

DocuSigned by: Steven G. Haynie 6/12/2025
DESIGNED SIGNATURE DATE

SIG. INVENTORY NO. 06-1131T1

Prepared for the Offices of:
Transportation Mobility and Safety Division
STATE OF NORTH CAROLINA
DEPARTMENT OF TRANSPORTATION
Signals Management Section
750 N.Greenfield Pkwy,Garner,NC 27529

RS&H
NC FIRM LICENSE No: F-0493
8521 SIX FORKS ROAD, SUITE 400
RALEIGH, NC 27615
(919) 926-4100

$$$$$$$$SCTLWG$$$$$
$$$$$$$$SIGNAMOD$$$$$
$$$$$$$$USERNAME$$$$

Docusign Envelope ID: 996831A4-A229-401E-B3E7-9B9D35618 9B2

PROJECT REFERENCE NO.	SHEET NO.
U-5798B	Sig. 2.2

MAXTIME OVERLAP PROGRAMMING DETAIL FOR DEFAULT PHASING

Front Panel
Main Menu >Controller >Overlap >Overlap Parameters/Overlap Timings

Web Interface
Home >Controller >Overlap Configuration >Overlaps

Overlap Plan 1

Overlap	1	2	3	4	5	6
Type	FYA 4 - Section	FYA 4 - Section	FYA 4 - Section	FYA 4 - Section	FYA 4 - Section	FYA 4 - Section
Included Phases	2	4	6	8	6; 7	2; 3
Modifier Phases	1	3	5	7	-	-
Modifier Overlaps	-	-	-	-	-	-
Trail Green	0	0	0	0	0	0
Trail Yellow	0:0	0:0	0:0	0:0	0:0	0:0
Trail Red	0:0	0:0	0:0	0:0	0:0	0:0

MAXTIME OVERLAP PROGRAMMING DETAIL FOR ALTERNATE PHASING

Front Panel
Main Menu >Controller >Overlap >Overlap Parameters/Overlap Timings

Web Interface
Home >Controller >Overlap Configuration >Overlaps

In the table view of the web interface, right click on "Overlap" in the top left corner of the table. Copy the entire contents of Overlap Plan 1. Paste Overlap Plan 1 into Overlap Plan 2. Modify Overlap Plan 2 as shown below and save changes.

Overlap Plan 2

Overlap	1	2	3	4	5	6
Type	FYA 4 - Section	FYA 4 - Section	FYA 4 - Section	FYA 4 - Section	FYA 4 - Section	FYA 4 - Section
Included Phases	-	-	-	-	6; 7	2; 3
Modifier Phases	1	3	5	7	-	-
Modifier Overlaps	-	-	-	-	-	-
Trail Green	0	0	0	0	0	0
Trail Yellow	0:0	0:0	0:0	0:0	0:0	0:0
Trail Red	0:0	0:0	0:0	0:0	0:0	0:0

NOTICE INCLUDED PHASE

FYA SIGNAL WIRING DETAIL

(wire signal heads as shown)

MAXTIME STARTUP AND SOFTWARE FLASH PROGRAMMING DETAIL

Front Panel
Main Menu >Controller >Unit

Web Interface
Home >Controller >Unit

Modify parameters as shown below and save changes.

Start Up Parameters

StartUp Clearance Hold
6

Unit Flash Parameters

All Red Flash Exit Time
6

THIS ELECTRICAL DETAIL IS FOR
THE SIGNAL DESIGN: 06-1131T1
DESIGNED: June 2025
SEALED: 6/12/2025
REVISED: _____

Signal Upgrade - Temporary Signal 1
Electrical Detail - Sheet 2 of 3

DOCUMENT NOT CONSIDERED FINAL UNLESS ALL SIGNATURES COMPLETED

RS&H
NC FIRM LICENSE No: F-0493
8521 SIX FORKS ROAD, SUITE 400
RALEIGH, NC 27615
(919) 926-4100

ELECTRICAL AND PROGRAMMING DETAILS FOR:

Prepared for the Offices of:
NC Department of Transportation Mobility and Safety Division
Traffic Engineering Branch
Signals Management Section
750 N.Greenfield Pkwy,Garner,NC 27529

SR 1102 (Gillis Hill Road)
at
SR 1112 (Stoney Point Road)

Division 6 Cumberland County Fayetteville

PLAN DATE:	June 2025	REVIEWED BY:	O. Drobny
PREPARED BY:	S.G. Haynie	REVIEWED BY:	_____

REVISIONS	INIT.	DATE

SEAL
NORTH CAROLINA PROFESSIONAL SEAL 029531 ENGINEER STEVEN G. HAYNIE

DocuSigned by: Steven G. Haynie 6/12/2025
SIGNATURE DATE
SIG. INVENTORY NO. 06-1131T1

$$$$$$$$SCTLNG$$$$$
$$$$$$$$SSLNG$$$$$
$$$$$$$$SSDON$$$$$$$$

Docusign Envelope ID: 996831A4-A229-401E-B3E7-9B9D35618 9B2

PROJECT REFERENCE NO.	SHEET NO.
U-5798B	Sig. 2.3

MAXTIME ALTERNATE PHASING ACTIVATION DETAIL

To run alternate phasing, select a Pattern that is programmed to run Overlap Plan 2 and Detector Plan 2.
A Pattern can be selected through the scheduler or manually by changing the Operational Mode.

PHASING	OVERLAP PLAN	VEH DET PLAN
ACTIVE PLAN REQUIRED TO RUN DEFAULT PHASING	1	1
ACTIVE PLAN REQUIRED TO RUN ALTERNATE PHASING	2	2

ALTERNATE PHASING CHANGE SUMMARY

THE FOLLOWING IS A SUMMARY OF WHAT TAKES PLACE WHEN OVERLAP PLAN 2 AND VEHICLE DETECTOR PLAN 2 ACTIVATE TO CALL THE "ALTERNATE PHASING":

OVERLAP PLAN 2: Modifies overlap included phases for heads 11, 31, 51, and 71 to run protected turns only.

VEH DET PLAN 2: Disables phase 6 call on loop 1A and reduces delay time for phase 1 call on loop 1A to 3 seconds.

Disables phase 8 call on loop 3A and reduces delay time for phase 3 call on loop 3A to 3 seconds.

Disables phase 2 call on loop 5A and reduces delay time for phase 5 call on loop 5A to 3 seconds.

Disables phase 4 call on loop 7A and reduces delay time for phase 7 call on loop 7A to 3 seconds.

MAXTIME DETECTOR PROGRAMMING DETAIL FOR ALTERNATE PHASING LOOPS 1A, 3A, 5A & 7A

Front Panel
Main Menu >Controller >Detector >Veh Det Plans

Web Interface
Home >Controller >Detector Configuration >Vehicle Detectors

In the table view of web interface right click on "Detector" in the top left corner of the table. Copy the entire contents of Detector Plan 1. Paste Detector Plan 1 into Detector Plan 2. Modify Detector Plan 2 as shown below and save changes.

Plan 2

1A

Detector	Call Phase	Delay
1	1	3:0
29	0	-

3A

Detector	Call Phase	Delay
7	3	3:0
30	0	-

5A

Detector	Call Phase	Delay
15	5	3:0
31	0	-

7A

Detector	Call Phase	Delay
21	7	3:0
32	0	-

OUTPUT CHANNEL CONFIGURATION

Front Panel
Main Menu >Controller >More>Channels>Channels Config

Web Interface
Home >Controller >Advanced IO>Channels>Channel Configuration

Channel Configuration

Channel	Control Type	Control Source	Flash Yellow	Flash Red	Flash Alt	MMU Channel
1	Phase Vehicle	1		X	X	1
2	Phase Vehicle	2		X		2
3	Phase Vehicle	3		X	X	3
4	Phase Vehicle	4		X		4
5	Phase Vehicle	5		X		5
6	Phase Vehicle	6		X	X	6
7	Phase Vehicle	7		X		7
8	Phase Vehicle	8		X	X	8
9	Overlap	1		X	X	9
10	Overlap	2		X	X	10
11	Overlap	3		X		11
12	Overlap	4		X		12
13	Phase Ped	2				13
14	Phase Ped	4				14
15	Phase Ped	6				15
16	Phase Ped	8				16
17	Overlap	5		X	X	17
18	Overlap	6		X		18

MAXTIME ALTERNATE PHASING PATTERN PROGRAMMING DETAIL

Front Panel
Main Menu >Controller >Coordination >Patterns

Web Interface
Home >Controller >Coordination >Patterns

Pattern Parameters

Pattern	Veh Det Plan	Overlap Plan
*	2	2

* The Pattern number(s) are to be determined by the Division and/or City Traffic Engineer.

THIS ELECTRICAL DETAIL IS FOR
THE SIGNAL DESIGN: 06-1131T1
DESIGNED: June 2025
SEALED: 6/12/2025
REVISED: _____

RS&H
NC FIRM LICENSE No: F-0493
8521 SIX FORKS ROAD, SUITE 400
RALEIGH, NC 27615
(919) 926-4100

Signal Upgrade - Temporary Signal 1
Electrical Detail - Sheet 3 of 3

DOCUMENT NOT CONSIDERED FINAL UNLESS ALL SIGNATURES COMPLETED

ELECTRICAL AND PROGRAMMING DETAILS FOR:

Prepared for the Offices of:
Transportation Mobility and Safety Division
STATE OF NORTH CAROLINA DEPARTMENT OF TRANSPORTATION
Signals Management Section
750 N.Greenfield Pkwy,Garner,NC 27529

SR 1102 (Gillis Hill Road)
at
SR 1112 (Stoney Point Road)

Division 6 Cumberland County Fayetteville

PLAN DATE:	June 2025	REVIEWED BY:	O. Drobny
PREPARED BY:	S.G. Haynie	REVIEWED BY:	_____

REVISIONS	INIT.	DATE

SEAL
NORTH CAROLINA PROFESSIONAL SEAL 029531 ENGINEER STEVEN G. HAYNIE

DocuSigned by:
Steven G. Haynie 6/12/2025
SIGNATURE DATE

SIG. INVENTORY NO. 06-1131T1

$$$$$$$$SCTIME$$$$$
$$$$$$$$SIGNAME$$$$$
$$$$$$$$SIGDSCR$$$$$
$$$$$$$$USERNAME$$$$$

Docusign Envelope ID: 996831A4-A229-401E-B3E7-9B9D356189B2

PROJECT REFERENCE NO.	SHEET NO.
U-5798B	Sig. 3.0

PHASING DIAGRAM

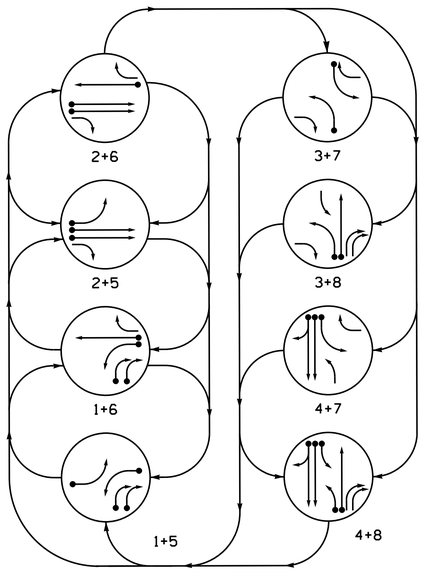

PHASING DIAGRAM DETECTION LEGEND

- DETECTED MOVEMENT
- UNDETECTED MOVEMENT (OVERLAP)
- UNSIGNALIZED MOVEMENT
- PEDESTRIAN MOVEMENT

DEFAULT TABLE OF OPERATION

SIGNAL FACE	PHASE 1+5	1+6	2+5	2+6	3+7	3+8	4+7	4+8	FLASH
11	—	—	~~R~~	~~R~~	~~R~~	~~R~~	~~R~~	~~R~~	~~R~~
21, 22	R	R	G	G	R	R	R	R	R
23	R	R	~~F Y~~	~~F Y~~	~~F Y~~	~~F Y~~	R	R	R
31	~~R~~	~~R~~	~~R~~	~~R~~	—	—	~~F Y~~	~~F Y~~	~~R~~
41, 42	R	R	R	R	R	R	G	G	R
51	—	~~R~~	—	~~R~~	~~R~~	~~R~~	~~R~~	~~R~~	~~R~~
61, 62	R	G	R	G	R	R	R	R	R
63	R	~~F Y~~	R	~~F Y~~	~~F Y~~	R	~~F Y~~	R	R
71	~~R~~	~~R~~	~~R~~	~~R~~	—	~~F Y~~	—	~~F Y~~	~~R~~
81, 82	R	R	R	R	R	G	R	G	R
83, 84	—	—	R	R	R	~~F Y~~	R	~~F Y~~	R

SIGNAL FACE I.D.

All Heads L.E.D.

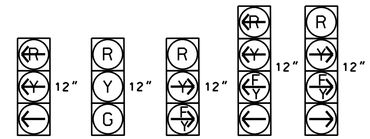

ALTERNATE TABLE OF OPERATION

SIGNAL FACE	PHASE 1+5	1+6	2+5	2+6	3+7	3+8	4+7	4+8	FLASH
11	—	—	~~R~~	~~R~~	~~R~~	~~R~~	~~R~~	~~R~~	~~R~~
21, 22	R	R	G	G	R	R	R	R	R
23	R	R	~~F Y~~	~~F Y~~	~~F Y~~	~~F Y~~	R	R	R
31	~~R~~	~~R~~	~~R~~	~~R~~	—	—	~~R~~	~~R~~	~~R~~
41, 42	R	R	R	R	R	R	G	G	R
51	—	~~R~~	—	~~R~~	~~R~~	~~R~~	~~R~~	~~R~~	~~R~~
61, 62	R	G	R	G	R	R	R	R	R
63	R	~~F Y~~	R	~~F Y~~	~~F Y~~	R	~~F Y~~	R	R
71	~~R~~	~~R~~	~~R~~	~~R~~	—	~~R~~	—	~~R~~	~~R~~
81, 82	R	R	R	R	R	G	R	G	R
83, 84	—	—	R	R	R	~~F Y~~	R	~~F Y~~	R

ALTERNATE PHASING DIAGRAM

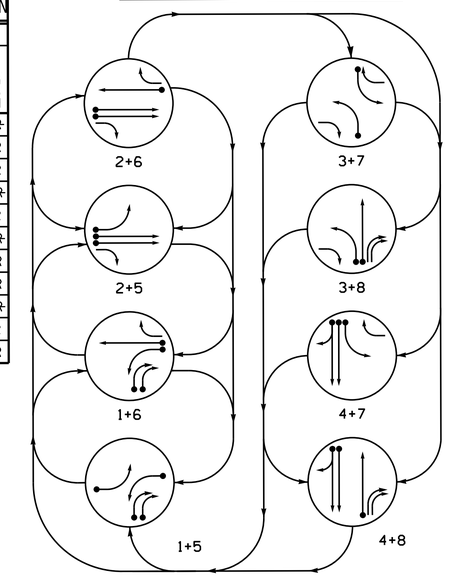

PHASING DIAGRAM DETECTION LEGEND

- DETECTED MOVEMENT
- UNDETECTED MOVEMENT (OVERLAP)
- UNSIGNALIZED MOVEMENT
- PEDESTRIAN MOVEMENT

8 Phase
Fully Actuated
Fayetteville Signal System

NOTES

1. Refer to "Roadway Standard Drawings NCDOT" dated January 2024 and "Standard Specifications for Roads and Structures" dated January 2024.
2. Do not program signal for late night flashing operation unless otherwise directed by the Engineer.
3. Phase 1 and/or phase 5 may be lagged.
4. Phase 3 and/or phase 7 may be lagged.
5. Set all detector units to presence mode.
6. The Division Traffic Engineer will determine the hours of use for each phasing plan.
7. This intersection uses multi-zone microwave detection. Install detectors according to the manufacturer's instructions to achieve the desired direction.
8. Maximum times shown in timing chart are for free-run operation only. Coordinated signal system timing values supersede these values.

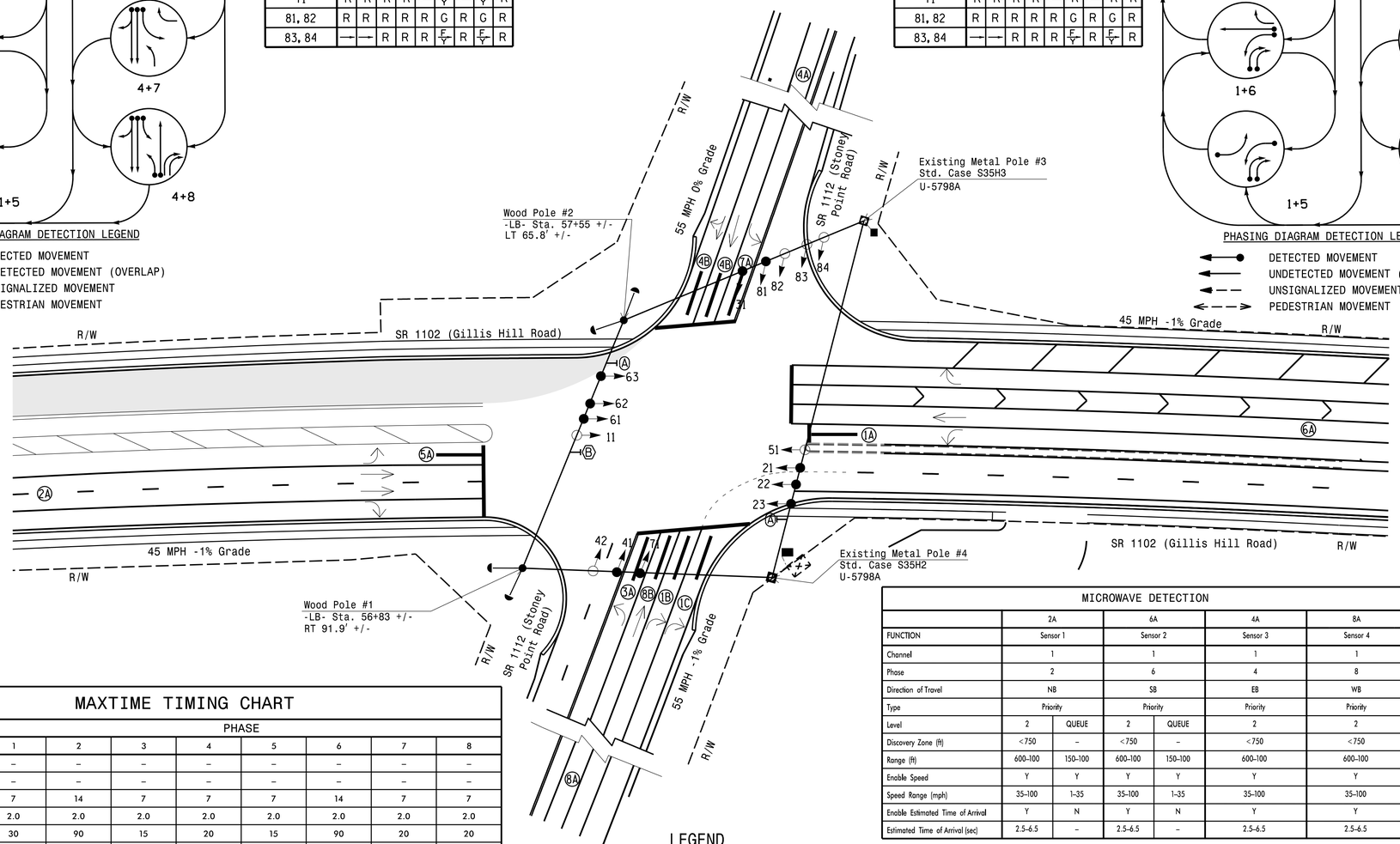

MAXTIME DETECTOR INSTALLATION CHART

DETECTOR					PROGRAMMING							
LOOP	SIZE (FT)	DISTANCE FROM STOPBAR (FT)	TURNS	NEW LOOP	CALL PHASE	DELAY TIME	EXTEND TIME	EXTEND	ADDED INITIAL CALL	DELAY DURING GREEN	NEW CARD
1A	6X40	0	✳	✳	1	-	-	X	-	X	-	✳
1B	6X40	0	✳	✳	1	15	-	X	-	X	-	✳
1C	6X40	0	✳	✳	1	15	-	X	-	X	-	✳
3A	6X40	0	✳	✳	3	15+	-	X	-	X	-	✳
					8@	3	-	X	-	X	-	✳
4B	6X40	0	✳	✳	4	-	-	X	-	X	-	✳
4B	6X40	0	✳	✳	4	15	-	X	-	X	-	✳
5A	6X40	0	✳	✳	5	-	-	X	-	X	-	✳
7A	6X40	0	✳	✳	7	15+	-	X	-	X	-	✳
					4@	3	-	X	-	X	-	✳
8B	6X40	0	✳	✳	8	-	-	X	-	X	-	✳

✳ Denotes Microwave Detection
+ Reduce delay to 3 seconds during Alternate Phasing Operation
@ Disable call during Alternate Phasing Operation

MICROWAVE DETECTION

	2A		6A		4A	8A
FUNCTION	Sensor 1		Sensor 2		Sensor 3	Sensor 4
Channel	1		1		1	1
Phase	2		6		4	8
Direction of Travel	NB		SB		EB	WB
Type	Priority		Priority		Priority	Priority
Level	2	QUEUE	2	QUEUE	2	2
Discovery Zone (ft)	<750	–	<750	–	<750	<750
Range (ft)	600–100	150–100	600–100	150–100	600–100	600–100
Enable Speed	Y	Y	Y	Y	Y	Y
Speed Range (mph)	35–100	1–35	35–100	1–35	35–100	35–100
Enable Estimated Time of Arrival	Y	N	Y	N	Y	Y
Estimated Time of Arrival (sec)	2.5–6.5	–	2.5–6.5	–	2.5–6.5	2.5–6.5

MAXTIME TIMING CHART

FEATURE	PHASE 1	2	3	4	5	6	7	8
Walk *	–	–	–	–	–	–	–	–
Ped Clear	–	–	–	–	–	–	–	–
Min Green *	7	14	7	7	7	14	7	7
Passage *	2.0	2.0	2.0	2.0	2.0	2.0	2.0	2.0
Max 1 *	30	90	15	20	15	90	20	20
Yellow Change	3.0	4.6	3.0	5.3	3.0	4.6	3.0	5.3
Red Clear	3.9	2.2	2.8	1.8	4.4	2.2	3.2	1.8
Added Initial *	–	–	–	–	–	–	–	–
Maximum Initial *	–	–	–	–	–	–	–	–
Time Before Reduction *	–	–	–	–	–	–	–	–
Time To Reduce *	–	–	–	–	–	–	–	–
Minimum Gap	–	–	–	–	–	–	–	–
Advance Walk	–	–	–	–	–	–	–	–
Non Lock Detector	X	–	X	X	X	–	X	X
Vehicle Recall	–	MIN RECALL	–	–	–	MIN RECALL	–	–
Dual Entry	–	–	–	X	–	–	–	X

* These values may be field adjusted. Do not adjust Min Green and Passage times for phases 2 and 6 lower than what is shown. Min Green for all other phases should not be lower than 4 seconds.

LEGEND

PROPOSED		EXISTING
	Traffic Signal Head	
	Modified Signal Head	N/A
	Sign	
	Pedestrian Signal Head	
	Signal Pole with Guy	
	Signal Pole with Sidewalk Guy	
	Inductive Loop Detector	
	Controller & Cabinet	
	Junction Box	
	Oversized Junction Box	
	2-in Underground Conduit	

PROPOSED		EXISTING
N/A	Right of Way	
	Directional Arrow	
	Perm. Utility Easement	N/A
	Right Arrow "ONLY" Sign (R3-5R)	
	Strain Pole	
	Construction Zone	
	Out of Pavement Detection Zone	

RS&H
NC FIRM LICENSE No: F-0493
8521 SIX FORKS ROAD, SUITE 400
RALEIGH, NC 27615
(919) 926-4100

Temporary Signal 2 - TCP Phase III Step 2

Prepared for the Offices of:
Transportation Mobility and Safety Division
STATE OF NORTH CAROLINA DEPARTMENT OF TRANSPORTATION
Signal Design Section
750 N.Greenfield Pkwy,Garner,NC 27529

SR 1102 (Gillis Hill Road)
at
SR 1112 (Stoney Point Road)

Division 6 Cumberland County Fayetteville

PLAN DATE: June 2025 REVIEWED BY: S.G. Haynie
PREPARED BY: G. M. Moreau REVIEWED BY: ----------

SCALE 0 40 1"=40'

REVISIONS	INIT.	DATE

DOCUMENT NOT CONSIDERED FINAL UNLESS ALL SIGNATURES COMPLETED

SEAL
NORTH CAROLINA PROFESSIONAL SEAL 029531 ENGINEER STEVEN G. HAYNIE

DocuSigned by: Steven G. Haynie 6/12/2025
SIGNATURE DATE

SIG. INVENTORY NO. 06-1131T2

$$$

Docusign Envelope ID: 996831A4-A229-401E-B3E7-9B9D356189B2

PROJECT REFERENCE NO.	SHEET NO.
U-5798B	Sig. 3.1

18 CHANNEL IP CONFLICT MONITOR PROGRAMMING DETAIL

(remove jumpers and set switches as shown)

REMOVE DIODE JUMPERS 1-5, 1-6, 1-9, 1-11, 1-17, 2-5, 2-6, 2-17, 2-18, 3-7, 3-8, 3-9, 3-10, 3-12, 3-17, 3-18, 4-7, 4-8, 4-9, 4-10, 4-12, 4-17, 5-9, 5-11, 5-18, 6-9, 6-11, 6-17, 6-18, 7-10, 7-12, 7-17, 7-18, 8-9, 8-10, 8-12, 8-18, 9-10, 9-11, 9-12, 9-17, 9-18, 10-12, 10-17, 10-18, 11-17, 12-17 12-18 and 17-18.

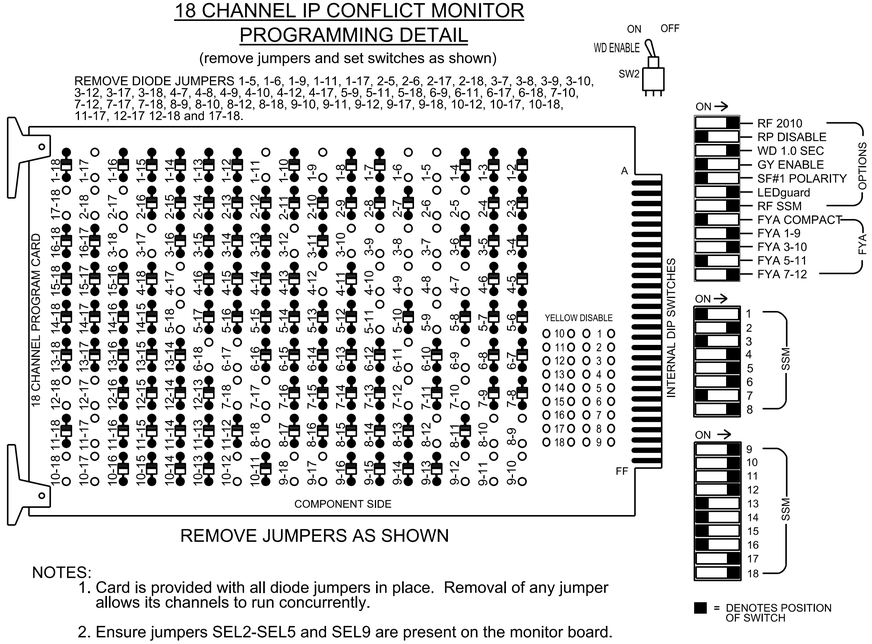

REMOVE JUMPERS AS SHOWN

NOTES:

1. Card is provided with all diode jumpers in place. Removal of any jumper allows its channels to run concurrently.
2. Ensure jumpers SEL2-SEL5 and SEL9 are present on the monitor board.
3. Ensure that the Red Enable is active at all times during normal operation.
4. Integrate monitor with Ethernet network in cabinet.

NOTES

1. To prevent "flash-conflict" problems, insert red flash program blocks for all vehicle load switches in the output file. The installer shall verify that signal heads flash in accordance with the signal plan.
2. Program phases 4 and 8 for Dual Entry.
3. Program controller to start up in phase 2 Green No Walk and 6 Green No Walk.
4. If this signal will be managed by an ATMS software, enable controller and detector logging for all detectors used at this location.
5. The cabinet and controller are part of the Fayetteville Signal System.

EQUIPMENT INFORMATION

Controller.....2070LX
Cabinet.....332 w/ Aux
Software.....Q-Free MAXTIME
Cabinet Mount.....Base
Output File Positions.....18 With Aux. Output File
Load Switches Used.....S1,S2,S4,S5,S7,S8,
S10,S11,AUX S1,AUX S2,
AUX S3,AUX S4,AUX S5,AUX S6
Phases Used.....1,2,3,4,5,6,7,8
Overlap "1".....*
Overlap "2".....*
Overlap "3".....*
Overlap "4".....*
Overlap "5".....*
Overlap "6".....*

*See overlap programming detail on sheet 2

SIGNAL HEAD HOOK-UP CHART

LOAD SWITCH NO.	S1	S2	S3	S4	S5	S6	S7	S8	S9	S10	S11	S12	AUX S1	AUX S2	AUX S3	AUX S4	AUX S5	AUX S6
CMU CHANNEL NO.	1	2	13	3	4	14	5	6	15	7	8	16	9	10	17	11	12	18
PHASE	1	2	2 PED	3	4	4 PED	5	6	6 PED	7	8	8 PED	OL1	OL2	OL5	OL3	OL4	OL6
SIGNAL HEAD NO.	★ 83,84	21,22	NU	★ 31	41,42	NU	51	61,62	NU	★ 71	81,82	NU	★ 83,84	★ 31	★ 63	11	★ 71	★ 23
RED		128			101			134			107		A121		A111			A104
YELLOW	*	129		*	102			135		*	108							
GREEN		130			103			136			109							
RED ARROW							131							A124		A114	A101	
YELLOW ARROW							132						A122	A125	A112	A115	A102	A105
FLASHING YELLOW ARROW													A123	A126	A113		A103	A106
GREEN ARROW	127			118			133			124						A116		

NU = Not Used

* Denotes install load resistor. See load resistor installation detail this sheet.

★ See pictorial of head wiring in detail on sheet 2.

FLASHER CIRCUIT MODIFICATION DETAIL

In order to ensure that signals flash concurrently on the Same approach, make the following flasher circuit changes:

1. On rear of PDA - remove wire from Term. T2-4 and terminate on T2-2.
2. On rear of PDA - remove wire from Term. T2-5 and terminate on T2-3.
3. Remove flasher unit 2.

The changes listed above ties all phases and overlaps to flasher unit 1.

INPUT FILE POSITION LAYOUT

(front view)

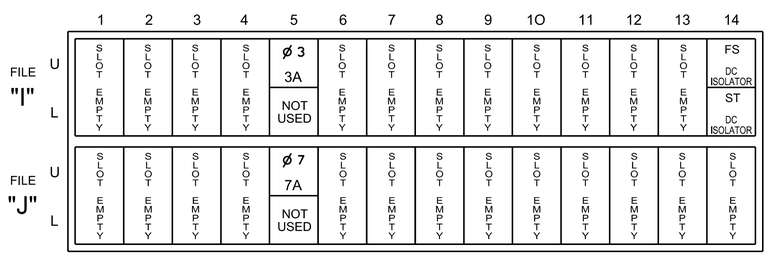

EX. : 1A, 2A, ETC. = LOOP NO.'S

FS = FLASH SENSE
ST = STOP TIME

INPUT FILE CONNECTION & PROGRAMMING CHART

LOOP NO.	LOOP TERMINAL	INPUT FILE POS.	PIN NO.	INPUT POINT	DETECTOR NO.	CALL PHASE	DELAY TIME	EXTEND TIME	EXTEND	ADDED INITIAL	CALL	DELAY DURING GREEN
3A	TB4-5,6	I5U	58	20	7★	3	15.0	---	X	_	X	_
				-	30★	8	3.0	---	X	_	X	_
7A	TB5-5,6	J5U	57	19	21★	7	15.0	---	X	_	X	_
				-	32★	4	3.0	---	X	_	X	_

★ See detector programming detail for alternate phasing on sheet 3.

INPUT FILE POSITION LEGEND: J2L
FILE J
SLOT 2
LOWER

LOAD RESISTOR INSTALLATION DETAIL

(install resistors as shown)

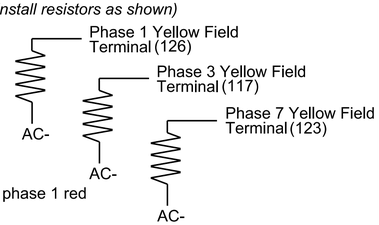

ACCEPTABLE VALUES	
Value (ohms)	Wattage
1.5K - 1.9K	25W (min)
2.0K - 3.0K	10W (min)

Note: Remove load resistors from phase 1 red and phase 5 red if present.

SPECIAL DETECTOR NOTE

Install a multi-zone microwave detection system for vehicle detection. Perform installation according to manufacturer's directions and NCDOT engineer -approved mounting locations to accomplish the detection schemes shown on the Signal Design Plans.

For Detection Zone 3A and 7A, the equipment placement is typical for a NCDOT installation.

RS&H
NC FIRM LICENSE No: F-0493
8521 SIX FORKS ROAD, SUITE 400
RALEIGH, NC 27615
(919) 926-4100

THIS ELECTRICAL DETAIL IS FOR
THE SIGNAL DESIGN: 06-1131T2
DESIGNED: June 2025
SEALED: 6/12/2025
REVISED: _____

Signal Upgrade - Temporary Signal 2
Electrical Detail - Sheet 1 of 3

DOCUMENT NOT CONSIDERED FINAL UNLESS ALL SIGNATURES COMPLETED

ELECTRICAL AND PROGRAMMING DETAILS FOR:

SR 1102 (Gillis Hill Road)
at
SR 1112 (Stoney Point Road)

Division 6 Cumberland County Fayetteville

PLAN DATE: June 2025	REVIEWED BY: O. Drobny
PREPARED BY: S.G. Haynie	REVIEWED BY: _____

REVISIONS	INIT.	DATE

Prepared for the Offices of:
North Carolina Department of Transportation Mobility and Safety Division
Traffic Engineering Branch
Signals Management Section
750 N.Greenfield Pkwy,Garner,NC 27529

SEAL
NORTH CAROLINA PROFESSIONAL SEAL 029531 ENGINEER STEVEN G. HAYNIE

DocuSigned by: Steven G. Haynie 6/12/2025
SIGNATURE DATE

SIG. INVENTORY NO. 06-1131T2

$$$$$$SYSTIME$$$$
$$$$$$SYSTIME$$$$
$$$$$$SYSDOW$$$$
$$$$$$SUSERNAME$$$$

Docusign Envelope ID: 996831A4-A229-401E-B3E7-9B9D35189B2

PROJECT REFERENCE NO.	SHEET NO.
U-5798B	Sig. 3.2

MAXTIME OVERLAP PROGRAMMING DETAIL FOR DEFAULT PHASING

Front Panel
Main Menu >Controller >Overlap >Overlap Parameters/Overlap Timings

Web Interface
Home >Controller >Overlap Configuration >Overlaps

Overlap Plan 1

Overlap	1	2	3	4	5	6
Type	FYA 4 - Section	FYA 4 - Section	Normal	FYA 4 - Section	FYA 4 - Section	FYA 4 - Section
Included Phases	8	4	1	8	6, 7	2, 3
Modifier Phases	1	3	-	7	-	-
Modifier Overlaps	-	-	-	-	-	-
Trail Green	0	0	0	0	0	0
Trail Yellow	0.0	0.0	0.0	0.0	0.0	0.0
Trail Red	0.0	0.0	0.0	0.0	0.0	0.0

MAXTIME OVERLAP PROGRAMMING DETAIL FOR ALTERNATE PHASING

Front Panel
Main Menu >Controller >Overlap >Overlap Parameters/Overlap Timings

Web Interface
Home >Controller >Overlap Configuration >Overlaps

In the table view of the web interface, right click on "Overlap" in the top left corner of the table. Copy the entire contents of Overlap Plan 1. Paste Overlap Plan 1 into Overlap Plan 2. Modify Overlap Plan 2 as shown below and save changes.

Overlap Plan 2

Overlap	1	2	3	4	5	6
Type	FYA 4 - Section	FYA 4 - Section	Normal	FYA 4 - Section	FYA 4 - Section	FYA 4 - Section
Included Phases	8	-	1	-	6, 7	2, 3
Modifier Phases	1	3	-	7	-	-
Modifier Overlaps	-	-	-	-	-	-
Trail Green	0	0	0	0	0	0
Trail Yellow	0.0	0.0	0.0	0.0	0.0	0.0
Trail Red	0.0	0.0	0.0	0.0	0.0	0.0

NOTICE INCLUDED PHASE

FYA SIGNAL WIRING DETAIL

(wire signal heads as shown)

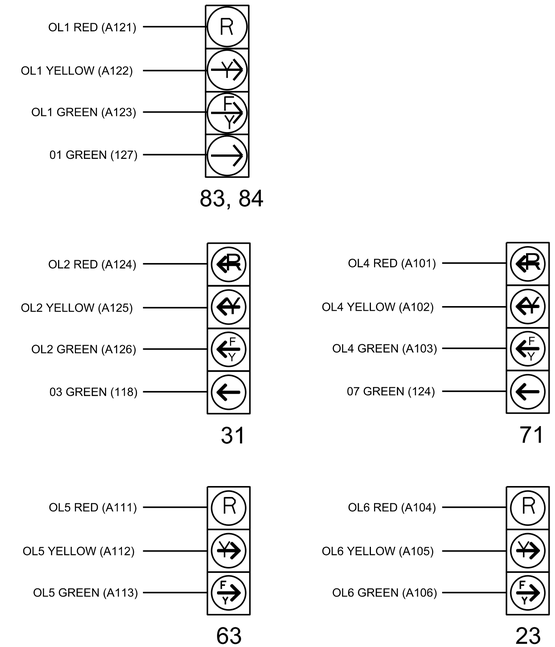

MAXTIME STARTUP AND SOFTWARE FLASH PROGRAMMING DETAIL

Front Panel
Main Menu >Controller >Unit

Web Interface
Home >Controller >Unit

Modify parameters as shown below and save changes.

Start Up Parameters

StartUp Clearance Hold
6

Unit Flash Parameters

All Red Flash Exit Time
6

THIS ELECTRICAL DETAIL IS FOR
THE SIGNAL DESIGN: 06-1131T2
DESIGNED: June 2025
SEALED: 6/12/2025
REVISED: _____

RS&H
NC FIRM LICENSE No: F-0493
8521 SIX FORKS ROAD, SUITE 400
RALEIGH, NC 27615
(919) 926-4100

Signal Upgrade - Temporary Signal 2
Electrical Detail - Sheet 2 of 3

DOCUMENT NOT CONSIDERED FINAL UNLESS ALL SIGNATURES COMPLETED

ELECTRICAL AND PROGRAMMING DETAILS FOR:

Prepared for the Offices of:
Transportation Mobility and Safety Division
STATE OF NORTH CAROLINA
DEPARTMENT OF TRANSPORTATION
Signals Management Section
750 N.Greenfield Pkwy,Garner,NC 27529

SR 1102 (Gillis Hill Road)
at
SR 1112 (Stoney Point Road)

Division 6 Cumberland County Fayetteville

PLAN DATE:	June 2025	REVIEWED BY:	O. Drobny
PREPARED BY:	S.G. Haynie	REVIEWED BY:	_____

REVISIONS	INIT.	DATE

SEAL
NORTH CAROLINA PROFESSIONAL SEAL 029531 ENGINEER STEVEN G. HAYNIE

DocuSigned by: Steven G. Haynie 6/12/2025
DESIGNER SIGNATURE DATE

SIG. INVENTORY NO. 06-1131T2

$$$$$$$$SCTLNG$$$$$
$$$$$$$$SSLNG$$$$$
$$$$$$$$SSDON$$$$$
$$$$$$$$USERNAME$$$$

Docusign Envelope ID: 996831A4-A229-401E-B3E7-9B9D35618 9B2

PROJECT REFERENCE NO.	SHEET NO.
U-5798B	Sig. 3.3

MAXTIME ALTERNATE PHASING ACTIVATION DETAIL

To run alternate phasing, select a Pattern that is programmed to run Overlap Plan 2 and Detector Plan 2.
A Pattern can be selected through the scheduler or manually by changing the Operational Mode.

PHASING	OVERLAP PLAN	VEH DET PLAN
ACTIVE PLAN REQUIRED TO RUN DEFAULT PHASING	1	1
ACTIVE PLAN REQUIRED TO RUN ALTERNATE PHASING	2	2

ALTERNATE PHASING CHANGE SUMMARY

THE FOLLOWING IS A SUMMARY OF WHAT TAKES PLACE WHEN OVERLAP PLAN 2 AND VEHICLE DETECTOR PLAN 2 ACTIVATE TO CALL THE "ALTERNATE PHASING":

OVERLAP PLAN 2: Modifies overlap included phases for heads 31 and 71 to run protected turns only.

VEH DET PLAN 2: Disables phase 8 call on loop 3A and reduces delay time for phase 3 call on loop 3A to 3 seconds.

Disables phase 4 call on loop 7A and reduces delay time for phase 7 call on loop 7A to 3 seconds.

MAXTIME DETECTOR PROGRAMMING DETAIL FOR ALTERNATE PHASING LOOPS 3A & 7A

Front Panel
Main Menu >Controller >Detector >Veh Det Plans

Web Interface
Home >Controller >Detector Configuration >Vehicle Detectors

In the table view of web interface right click on "Detector" in the top left corner of the table. Copy the entire contents of Detector Plan 1. Paste Detector Plan 1 into Detector Plan 2. Modify Detector Plan 2 as shown below and save changes.

Plan 2

3A

Detector	Call Phase	Delay
7	3	3.0
30	0	-

7A

Detector	Call Phase	Delay
21	7	3.0
32	0	-

OUTPUT CHANNEL CONFIGURATION

Front Panel
Main Menu >Controller >More>Channels>Channels Config

Web Interface
Home >Controller >Advanced IO>Channels>Channel Configuration

Channel Configuration

Channel	Control Type	Control Source	Flash Yellow	Flash Red	Flash Alt	MMU Channel
1	Phase Vehicle	1		X	X	1
2	Phase Vehicle	2		X		2
3	Phase Vehicle	3		X	X	3
4	Phase Vehicle	4		X		4
5	Phase Vehicle	5		X		5
6	Phase Vehicle	6		X	X	6
7	Phase Vehicle	7		X		7
8	Phase Vehicle	8		X	X	8
9	Overlap	1		X	X	9
10	Overlap	2		X	X	10
11	Overlap	3		X		11
12	Overlap	4		X		12
13	Phase Ped	2				13
14	Phase Ped	4				14
15	Phase Ped	6				15
16	Phase Ped	8				16
17	Overlap	5		X	X	17
18	Overlap	6		X		18

MAXTIME ALTERNATE PHASING PATTERN PROGRAMMING DETAIL

Front Panel
Main Menu >Controller >Coordination >Patterns

Web Interface
Home >Controller >Coordination >Patterns

Pattern Parameters

Pattern	Veh Det Plan	Overlap Plan
*	2	2

* The Pattern number(s) are to be determined by the Division and/or City Traffic Engineer.

THIS ELECTRICAL DETAIL IS FOR
THE SIGNAL DESIGN: 06-1131T2
DESIGNED: June 2025
SEALED: 6/12/2025
REVISED: _____

RS&H
NC FIRM LICENSE No: F-0493
8521 SIX FORKS ROAD, SUITE 400
RALEIGH, NC 27615
(919) 926-4100

Signal Upgrade - Temporary Signal 2
Electrical Detail - Sheet 3 of 3

DOCUMENT NOT CONSIDERED FINAL UNLESS ALL SIGNATURES COMPLETED

ELECTRICAL AND PROGRAMMING DETAILS FOR:

Prepared for the Offices of:
Transportation Mobility and Safety Division
STATE OF NORTH CAROLINA DEPARTMENT OF TRANSPORTATION
Signals Management Section
750 N.Greenfield Pkwy,Garner,NC 27529

SR 1102 (Gillis Hill Road)
at
SR 1112 (Stoney Point Road)

Division 6 Cumberland County Fayetteville

PLAN DATE:	June 2025	REVIEWED BY:	D. Drobny
PREPARED BY:	S.G. Haynie	REVIEWED BY:	_____

REVISIONS	INIT.	DATE

SEAL
NORTH CAROLINA PROFESSIONAL SEAL 029531 ENGINEER STEVEN G. HAYNIE

DocuSigned by: Steven G. Haynie 6/12/2025
DESIGNER SIGNATURE DATE

SIG. INVENTORY NO. 06-1131T2

$$$$$$$$SYSTIME$$$$$$$$
$$$$$$$$SYSTIME$$$$$$$$
$$$$$$$$SYSDOW$$$$$$$$
$$$$$$$$USERNAME$$$$$$$$

Docusign Envelope ID: 996831A4-A229-401E-B3E7-9B9D35618 9B2

PROJECT REFERENCE NO.	SHEET NO.
U-5798B	Sig. 4.0

PHASING DIAGRAM

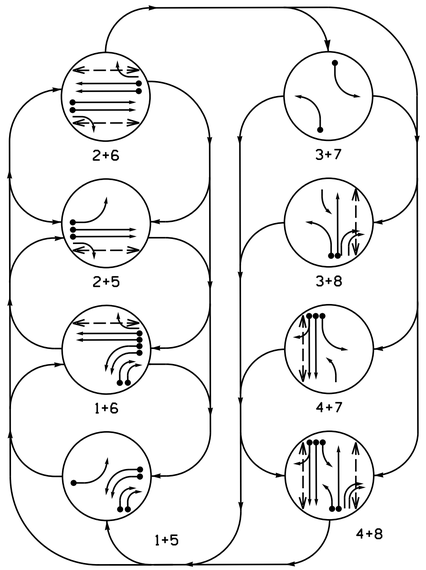

PHASING DIAGRAM DETECTION LEGEND

- DETECTED MOVEMENT
- UNDETECTED MOVEMENT (OVERLAP)
- UNSIGNALIZED MOVEMENT
- PEDESTRIAN MOVEMENT

DEFAULT TABLE OF OPERATION

SIGNAL FACE	PHASE 1+5	1+6	2+5	2+6	3+7	3+8	4+7	4+8	FLASH
11, 12	—	—	~~R~~	~~R~~	~~R~~	~~R~~	~~R~~	~~R~~	~~R~~
21, 22, 24	R	R	G	G	R	R	R	R	R
23	R	R	F Y	F Y	R	R	R	R	R
31	~~R~~	~~R~~	~~R~~	~~R~~	—	—	F Y	F Y	~~R~~
41, 42, 43	R	R	R	R	R	R	G	G	R
51	—	~~R~~	—	~~R~~	~~R~~	~~R~~	~~R~~	~~R~~	~~R~~
61, 62, 64	R	G	R	G	R	R	R	R	R
63	R	F Y	R	F Y	R	R	R	R	R
71	~~R~~	~~R~~	~~R~~	~~R~~	—	F Y	—	F Y	~~R~~
81, 82, 85	R	R	R	R	R	G	R	G	R
83, 84	—	—	R	R	R	F Y	R	F Y	R
P21, P22	DW	DW	W	W	DW	DW	DW	DW	DRK
P41, P42	DW	DW	DW	DW	DW	DW	W	W	DRK
P61, P62	DW	W	DW	W	DW	DW	DW	DW	DRK
P81, P82	DW	DW	DW	DW	DW	W	DW	W	DRK

SIGNAL FACE I.D.

All Heads L.E.D.

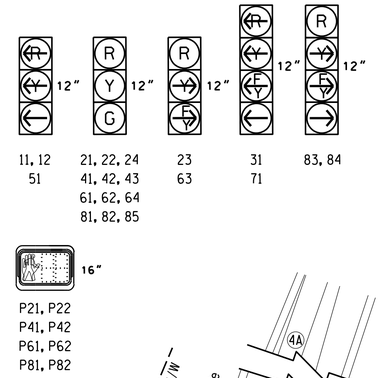

ALTERNATE TABLE OF OPERATION

SIGNAL FACE	PHASE 1+5	1+6	2+5	2+6	3+7	3+8	4+7	4+8	FLASH
11, 12	—	—	~~R~~	~~R~~	~~R~~	~~R~~	~~R~~	~~R~~	~~R~~
21, 22, 24	R	R	G	G	R	R	R	R	R
23	R	R	F Y	F Y	R	R	R	R	R
31	~~R~~	~~R~~	~~R~~	~~R~~	—	—	~~R~~	~~R~~	~~R~~
41, 42, 43	R	R	R	R	R	R	G	G	R
51	—	~~R~~	—	~~R~~	~~R~~	~~R~~	~~R~~	~~R~~	~~R~~
61, 62, 64	R	G	R	G	R	R	R	R	R
63	R	F Y	R	F Y	R	R	R	R	R
71	~~R~~	~~R~~	~~R~~	~~R~~	—	~~R~~	—	~~R~~	~~R~~
81, 82, 85	R	R	R	R	R	G	R	G	R
83, 84	—	—	R	R	R	F Y	R	F Y	R
P21, P22	DW	DW	W	W	DW	DW	DW	DW	DRK
P41, P42	DW	DW	DW	DW	DW	DW	W	W	DRK
P61, P62	DW	W	DW	W	DW	DW	DW	DW	DRK
P81, P82	DW	DW	DW	DW	DW	W	DW	W	DRK

ALTERNATE PHASING DIAGRAM

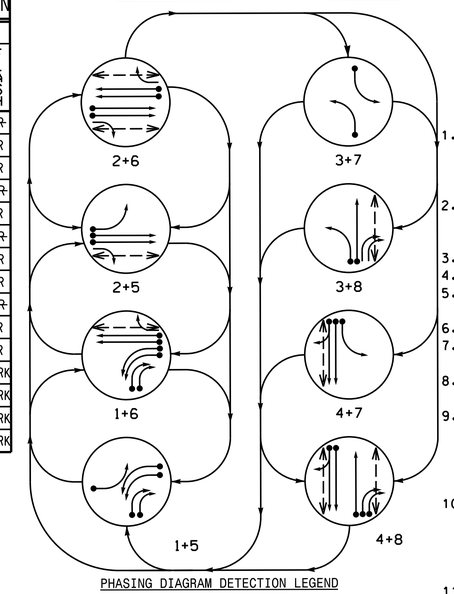

PHASING DIAGRAM DETECTION LEGEND

- DETECTED MOVEMENT
- UNDETECTED MOVEMENT (OVERLAP)
- UNSIGNALIZED MOVEMENT
- PEDESTRIAN MOVEMENT

8 Phase Fully Actuated Fayetteville Signal System NOTES

1. Refer to "Roadway Standard Drawings NCDOT" dated January 2024 and "Standard Specifications for Roads and Structures" dated January 2024.
2. Do not program signal for late night flashing operation unless otherwise directed by the Engineer.
3. Phase 1 and/or phase 5 may be lagged.
4. Phase 3 and/or phase 7 may be lagged.
5. Reposition existing signal heads numbered 21, 22, 23, and 51.
6. Set all detector units to presence mode.
7. Omit "WALK" and flashing "DON'T WALK" with no pedestrian calls.
8. Program pedestrian heads to countdown the flashing "Don't Walk" time only.
9. To provide a leading pedestrian interval on phase 2, program FYA head 23 to delay 7 seconds after the start of phase 2 walk interval. See Electrical Details for programming.
10. To provide a leading pedestrian interval on phase 6, program FYA head 63 to delay 7 seconds after the start of phase 6 walk interval. See Electrical Details for programming.
11. To provide a leading pedestrian interval on phase 8, program FYA heads 71, 83, and 84 to delay 7 seconds after the start of phase 8 walk interval. See Electrical Details for programming.
12. This intersection uses multi-zone microwave detection. Install detectors according to the manufacturer's instructions to achieve the desired detection.
13. The Division Traffic Engineer will determine the hours of use for each phasing plan.
14. Maximum times shown in timing chart are for free-run operation only. Coordinated signal system timing values supersede these values.

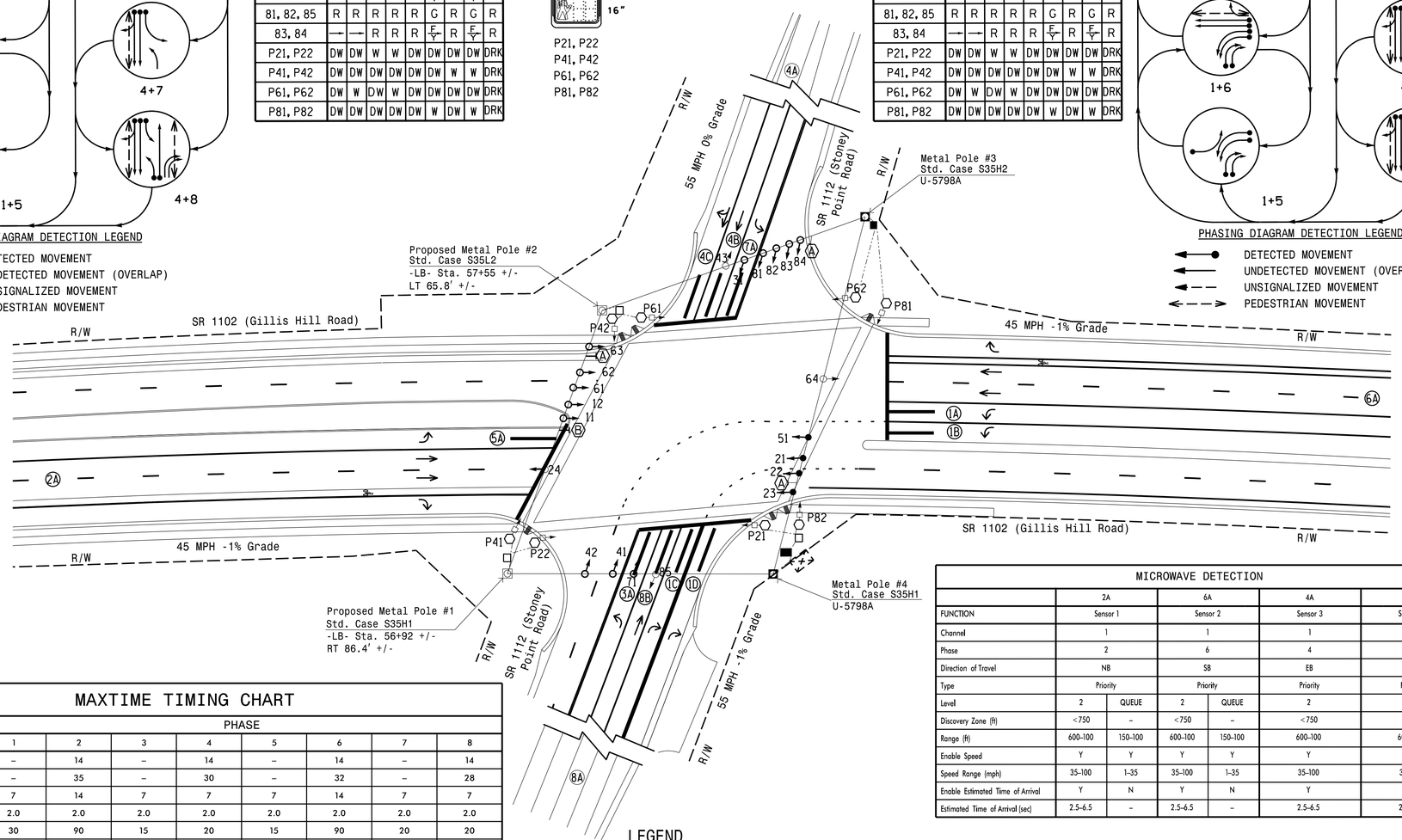

MICROWAVE DETECTION

	2A		6A		4A	8A
FUNCTION	Sensor 1		Sensor 2		Sensor 3	Sensor 4
Channel	1		1		1	1
Phase	2		6		4	8
Direction of Travel	NB		SB		EB	WB
Type	Priority		Priority		Priority	Priority
Level	2	QUEUE	2	QUEUE	2	2
Discovery Zone (ft)	<750	–	<750	–	<750	<750
Range (ft)	600–100	150–100	600–100	150–100	600–100	600–100
Enable Speed	Y	Y	Y	Y	Y	Y
Speed Range (mph)	35–100	1–35	35–100	1–35	35–100	35–100
Enable Estimated Time of Arrival	Y	N	Y	N	Y	Y
Estimated Time of Arrival (sec)	2.5–6.5	–	2.5–6.5	–	2.5–6.5	2.5–6.5

MAXTIME DETECTOR INSTALLATION CHART

DETECTOR					PROGRAMMING							
LOOP	SIZE (FT)	DISTANCE FROM STOPBAR (FT)	TURNS	NEW LOOP	CALL PHASE	DELAY TIME	EXTEND TIME	EXTEND	ADDED INITIAL	CALL	DELAY DURING GREEN	NEW CARD
1A	6X40	0	✱	✱	1	-	-	X	-	X	-	✱
1B	6X40	0	✱	✱	1	-	-	X	-	X	-	✱
1C	6X40	0	✱	✱	1	15	-	X	-	X	-	✱
1D	6X40	0	✱	✱	1	15	-	X	-	X	-	✱
3A	6X40	0	✱	✱	3 8ⓐ	15+ 3	- -	X X	- -	X X	- -	✱ ✱
4B	6X40	0	✱	✱	4	-	-	X	-	X	-	✱
4C	6X40	0	✱	✱	5	15	-	X	-	X	-	✱
5A	6X40	0	✱	✱	5	-	-	X	-	X	-	✱
7A	6X40	0	✱	✱	7 4ⓐ	15+ 3	- -	X X	- -	X X	- -	✱ ✱
8B	6X40	0	✱	✱	8	-	-	X	-	X	-	✱

✱ Denotes Microwave Detection
\+ Reduce delay to 3 seconds during Alternate Phasing Operation
ⓐ Disable call during Alternate Phasing Operation

MAXTIME TIMING CHART

FEATURE	PHASE 1	2	3	4	5	6	7	8
Walk *	–	14	–	14	–	14	–	14
Ped Clear	–	35	–	30	–	32	–	28
Min Green *	7	14	7	7	7	14	7	7
Passage *	2.0	2.0	2.0	2.0	2.0	2.0	2.0	2.0
Max 1 *	30	90	15	20	15	90	20	20
Yellow Change	3.0	4.6	3.0	5.3	3.0	4.6	3.0	5.3
Red Clear	4.7	2.7	3.2	1.7	3.8	2.7	3.3	1.7
Added Initial *	–	–	–	–	–	–	–	–
Maximum Initial *	–	–	–	–	–	–	–	–
Time Before Reduction *	–	–	–	–	–	–	–	–
Time To Reduce *	–	–	–	–	–	–	–	–
Minimum Gap	–	–	–	–	–	–	–	–
Advance Walk	–	–	–	7	–	–	–	–
Non Lock Detector	X	–	X	X	X	–	X	X
Vehicle Recall	–	MIN RECALL	–	–	–	MIN RECALL	–	–
Dual Entry	–	–	–	X	–	–	–	X

* These values may be field adjusted. Do not adjust Min Green and Passage times for phases 2 and 6 lower than what is shown. Min Green for all other phases should not be lower than 4 seconds.

LEGEND

PROPOSED		EXISTING	PROPOSED		EXISTING
	Traffic Signal Head		N/A	Right of Way	
	Modified Signal Head	N/A		Directional Arrow	
	Sign			Metal Strain Pole	
	Pedestrian Signal Head			Type I Pushbutton Post	
	Signal Pole with Guy			Type II Signal Pedestal	
	Signal Pole with Sidewalk Guy		N/A	Wheelchair Ramp	
	Out of Pavement Detection Zone		Ⓐ	"RIGHT TURN SIGNAL" Sign (R10-10R)	Ⓐ
	Controller & Cabinet		Ⓑ	"U-TURN YIELD TO RIGHT TURN" Sign (R10-16)	Ⓑ
	Junction Box				
	Oversized Junction Box				
	2-in Underground Conduit				

RS&H
NC FIRM LICENSE No: F-0493
8521 SIX FORKS ROAD, SUITE 400
RALEIGH, NC 27615
(919) 926-4100

Signal Upgrade - Final

Prepared for the Offices of:
Transportation Mobility and Safety Division
STATE OF NORTH CAROLINA DEPARTMENT OF TRANSPORTATION
Signal Design Section
750 N.Greenfield Pkwy,Garner,NC 27529

SR 1102 (Gillis Hill Road) at SR 1112 (Stoney Point Road)

Division 6 Cumberland County Fayetteville

PLAN DATE: June 2025 REVIEWED BY: S.G. Haynie
PREPARED BY: G. M. Moreau REVIEWED BY:

SCALE 0 40 1"=40'

REVISIONS | INIT. | DATE

DOCUMENT NOT CONSIDERED FINAL UNLESS ALL SIGNATURES COMPLETED

SEAL
NORTH CAROLINA PROFESSIONAL SEAL 029531 ENGINEER STEVEN G. HAYNIE

DocuSigned by: Steven G. Haynie 6/12/2025
SIGNATURE DATE

SIG. INVENTORY NO. 06-1131

$$$$$$SYSTIME$$$$$
$$$$$$SYSTIME$$$$$
$$$$$$DGN$$$$$$

Docusign Envelope ID: 996831A4-A229-401E-B3E7-9B9D356189B2

PROJECT REFERENCE NO.	SHEET NO.
U-5798B	Sig. 4.1

18 CHANNEL IP CONFLICT MONITOR PROGRAMMING DETAIL

(remove jumpers and set switches as shown)

REMOVE DIODE JUMPERS 1-5, 1-6, 1-9, 1-11, 1-15, 1-17, 2-5, 2-6, 2-13, 2-15, 2-17, 2-18, 3-7, 3-8, 3-9, 3-10, 3-12, 3-16, 4-7, 4-8, 4-9, 4-10, 4-12, 4-14, 4-16, 5-9, 5-11, 5-13, 5-18, 6-9, 6-11, 6-13, 6-15, 6-17, 6-18, 7-10, 7-12, 7-14, 8-9, 8-10, 8-12, 8-14, 8-16, 9-10, 9-11, 9-12, 9-14, 9-15, 9-16, 9-17, 10-12, 10-14, 10-16, 11-15, 11-17, 12-14, 12-16, 13-15, 13-17, 13-18, 14-16, 15-17, 15-18 and 17-18.

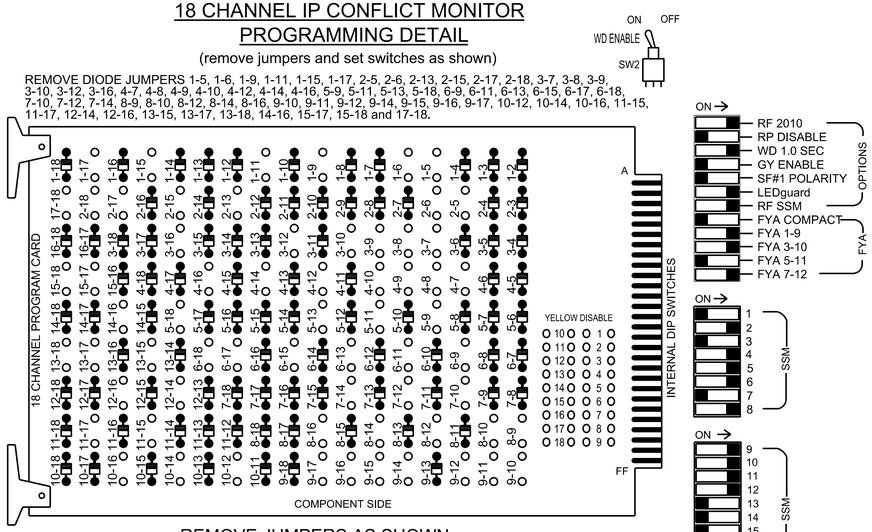

REMOVE JUMPERS AS SHOWN

NOTES:

1. Card is provided with all diode jumpers in place. Removal of any jumper allows its channels to run concurrently.
2. Ensure jumpers SEL2-SEL5 and SEL9 are present on the monitor board.
3. Ensure that the Red Enable is active at all times during normal operation.
4. Integrate monitor with Ethernet network in cabinet.

NOTES

1. To prevent "flash-conflict" problems, insert red flash program blocks for all vehicle load switches in the output file. The installer shall verify that signal heads flash in accordance with the signal plan.
2. Program phases 4 and 8 for Dual Entry.
3. Program controller to start up in phase 2 Green No Walk and 6 Green No Walk.
4. If this signal will be managed by an ATMS software, enable controller and detector logging for all detectors used at this location.
5. The cabinet and controller are part of the Fayetteville Signal System.

EQUIPMENT INFORMATION

Controller.....2070LX
Cabinet.....332 w/ Aux
Software.....Q-Free MAXTIME
Cabinet Mount.....Base
Output File Positions.....18 With Aux. Output File
Load Switches Used.....S1,S2,S3,S4,S5,S6,S7,S8,S9, S10,S11,S12,AUX S1,AUX S2, AUX S3,AUX S4,AUX S5,AUX S6
Phases Used.....1, 2, 2PED, 3, 4, 4PED, 5, 6, 6PED, 7, 8, 8PED
Overlap "1".....*
Overlap "2".....*
Overlap "3".....*
Overlap "4".....*
Overlap "5".....*
Overlap "6".....*

*See overlap programming detail on sheet 2

SIGNAL HEAD HOOK-UP CHART

LOAD SWITCH NO.	S1	S2	S3	S4	S5	S6	S7	S8	S9	S10	S11	S12	AUX S1	AUX S2	AUX S3	AUX S4	AUX S5	AUX S6
CMU CHANNEL NO.	1	2	13	3	4	14	5	6	15	7	8	16	9	10	17	11	12	18
PHASE	1	2	2 PED	3	4	4 PED	5	6	6 PED	7	8	8 PED	OL1	OL2	OL5	OL3	OL4	OL6
SIGNAL HEAD NO.	★ 83,84	21, 22,24	P21, P22	★ 31	41, 42,43	P41, P42	51	61, 62,64	P61, P62	★ 71	81, 82,85	P81, P82	★ 83,84	★ 31	★ 63	11;12	★ 71	★ 23
RED		128			101			134			107		A121		A111			A104
YELLOW	*	129		*	102			135		*	108							
GREEN		130			103			136			109							
RED ARROW							131							A124		A114	A101	
YELLOW ARROW							132						A122	A125	A112	A115	A102	A105
FLASHING YELLOW ARROW													A123	A126	A113		A103	A106
GREEN ARROW	127			118			133			124						A116		
✋		·	113	·	·	104	·	·	119	·	·	110	·	·	·	·	·	·
🚶		·	115	·	·	106	·	·	121	·	·	112	·	·	·	·	·	·

NU = Not Used

* Denotes install load resistor. See load resistor installation detail this sheet.

★See pictorial of head wiring in detail on sheet 2.

FLASHER CIRCUIT MODIFICATION DETAIL

In order to ensure that signals flash concurrently on the Same approach, make the following flasher circuit changes:

1. On rear of PDA - remove wire from Term. T2-4 and terminate on T2-2.
2. On rear of PDA - remove wire from Term. T2-5 and terminate on T2-3.
3. Remove flasher unit 2.

The changes listed above ties all phases and overlaps to flasher unit 1.

INPUT FILE POSITION LAYOUT

(front view)

		1	2	3	4	5	6	7	8	9	10	11	12	13	14
FILE "I"	U	SLOT EMPTY	SLOT EMPTY	SLOT EMPTY	SLOT EMPTY	Ø 3 3A	SLOT EMPTY	SLOT EMPTY	SLOT EMPTY	SLOT EMPTY	SLOT EMPTY	SLOT EMPTY	Ø 2 PED DC ISOLATOR	Ø 6 PED DC ISOLATOR	FS DC ISOLATOR
	L					NOT USED							Ø 4 PED DC ISOLATOR	Ø 8 PED DC ISOLATOR	ST DC ISOLATOR
FILE "J"	U	SLOT EMPTY	SLOT EMPTY	SLOT EMPTY	SLOT EMPTY	Ø 7 7A	SLOT EMPTY	SLOT EMPTY	SLOT EMPTY	SLOT EMPTY	SLOT EMPTY	SLOT EMPTY	SLOT EMPTY	SLOT EMPTY	SLOT EMPTY
	L					NOT USED									

EX. : 1A, 2A, ETC. = LOOP NO.'S

FS = FLASH SENSE
ST = STOP TIME

INPUT FILE CONNECTION & PROGRAMMING CHART

LOOP NO.	LOOP TERMINAL	INPUT FILE POS.	PIN NO.	INPUT POINT	DETECTOR NO.	CALL PHASE	DELAY TIME	EXTEND TIME	EXTEND	ADDED INITIAL	CALL	DELAY DURING GREEN
3A	TB4-5,6	I5U	58	20	7★	3	15.0	---	X	_	X	_
				·	30★	8	3.0	---	X	_	X	_
7A	TB5-5,6	J5U	57	19	21★	7	15.0	---	X	_	X	_
				·	32★	4	3.0	---	X	_	X	_
PED PUSH BUTTONS												
P21;P22	TB8-4,6	I12U	67	33	2	PED 2						
P41;P42	TB8-5,6	I12L	69	35	4	PED 4						
P61;P62	TB8-7,9	I13U	68	34	6	PED 6						
P81;P82	TB8-8,9	I13L	70	36	8	PED 8						

NOTE:
INSTALL DC ISOLATORS IN INPUT FILE SLOTS I12 AND I13.

★ See detector programming detail for alternate phasing on sheet 3.

INPUT FILE POSITION LEGEND: J2L
FILE J
SLOT 2
LOWER

COUNTDOWN PEDESTRIAN SIGNAL OPERATION

Countdown Ped Signals are required to display timing only during Ped Clearance Interval. Consult Ped Signal Module user's manual for instructions on selecting this feature.

LOAD RESISTOR INSTALLATION DETAIL

(install resistors as shown)

ACCEPTABLE VALUES	
Value (ohms)	Wattage
1.5K - 1.9K	25W (min)
2.0K - 3.0K	10W (min)

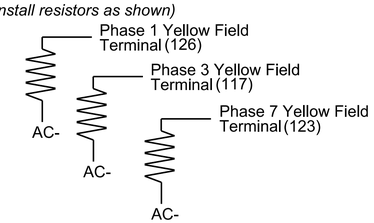

SPECIAL DETECTOR NOTE

Install a multi-zone microwave detection system for vehicle detection. Perform installation according to manufacturer's directions and NCDOT engineer -approved mounting locations to accomplish the detection schemes shown on the Signal Design Plans.

For Detection Zone 3A and 7A, the equipment placement is typical for a NCDOT installation.

THIS ELECTRICAL DETAIL IS FOR
THE SIGNAL DESIGN: 06-1131
DESIGNED: June 2025
SEALED: 6/12/2025
REVISED: _____

RS&H
NC FIRM LICENSE No: F-0493
8521 SIX FORKS ROAD, SUITE 400
RALEIGH, NC 27615
(919) 926-4100

Signal Upgrade - Final
Electrical Detail - Sheet 1 of 3

DOCUMENT NOT CONSIDERED FINAL UNLESS ALL SIGNATURES COMPLETED

ELECTRICAL AND PROGRAMMING DETAILS FOR:

SR 1102 (Gillis Hill Road)
at
SR 1112 (Stoney Point Road)

Division 6 Cumberland County Fayetteville

Prepared for the Offices of:
Traffic Engineering Branch, Mobility and Safety Division
State of North Carolina Department of Transportation
Signals Management Section
750 N.Greenfield Pkwy,Garner,NC 27529

PLAN DATE:	June 2025	REVIEWED BY:	O. Drobny
PREPARED BY:	S.G. Haynie	REVIEWED BY:	

REVISIONS	INIT.	DATE

SEAL
NORTH CAROLINA PROFESSIONAL SEAL 029531 ENGINEER STEVEN G. HAYNIE

DocuSigned by: Steven G. Haynie 6/12/2025
SIGNATURE DATE

SIG. INVENTORY NO. 06-1131

$$$$$$SYSTIME$$$$$$
$$$$$$SYSTIME$$$$$$
$$$$$$SYSDOW$$$$$$
$$$$$$USERNAME$$$$$$

Docusign Envelope ID: 996831A4-A229-401E-B3E7-9B9D35189B2

PROJECT REFERENCE NO.	SHEET NO.
U-5798B	Sig. 4.2

MAXTIME OVERLAP PROGRAMMING DETAIL FOR DEFAULT PHASING

Front Panel
Main Menu >Controller >Overlap >Overlap Parameters/Overlap Timings

Web Interface
Home >Controller >Overlap Configuration >Overlaps

Overlap Plan 1

Overlap	1	2	3	4	5	6
Type	FYA 4 - Section	FYA 4 - Section	Normal	FYA 4 - Section	FYA 4 - Section	FYA 4 - Section
Included Phases	8	4	1	8	6	2
Modifier Phases	1	3	-	7	-	-
Modifier Overlaps	-	-	-	-	-	-
Trail Green	0	0	0	0	0	0
Trail Yellow	0:0	0:0	0:0	0:0	0:0	0:0
Trail Red	0:0	0:0	0:0	0:0	0:0	0:0
FYA Ped Delay	7:0	0:0	0:0	7:0	7:0	7:0

MAXTIME OVERLAP PROGRAMMING DETAIL FOR ALTERNATE PHASING

Front Panel
Main Menu >Controller >Overlap >Overlap Parameters/Overlap Timings

Web Interface
Home >Controller >Overlap Configuration >Overlaps

In the table view of the web interface, right click on "Overlap" in the top left corner of the table. Copy the entire contents of Overlap Plan 1. Paste Overlap Plan 1 into Overlap Plan 2. Modify Overlap Plan 2 as shown below and save changes.

Overlap Plan 2

Overlap	1	2	3	4	5	6
Type	FYA 4 - Section	FYA 4 - Section	Normal	FYA 4 - Section	FYA 4 - Section	FYA 4 - Section
Included Phases	8	-	1	-	6	2
Modifier Phases	1	3	-	7	-	-
Modifier Overlaps	-	-	-	-	-	-
Trail Green	0	0	0	0	0	0
Trail Yellow	0:0	0:0	0:0	0:0	0:0	0:0
Trail Red	0:0	0:0	0:0	0:0	0:0	0:0
FYA Ped Delay	7:0	0:0	0:0	0:0	7:0	7:0

NOTICE INCLUDED PHASE

FYA SIGNAL WIRING DETAIL

(wire signal heads as shown)

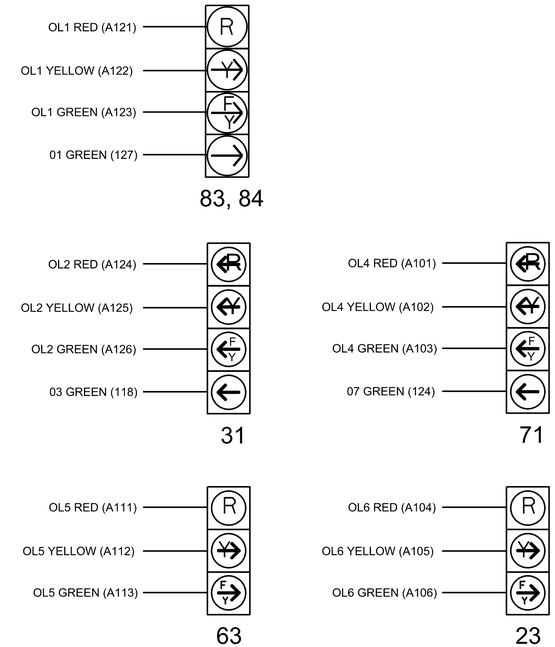

MAXTIME STARTUP AND SOFTWARE FLASH PROGRAMMING DETAIL

Front Panel
Main Menu >Controller >Unit

Web Interface
Home >Controller >Unit

Modify parameters as shown below and save changes.

Start Up Parameters

StartUp Clearance Hold
6

Unit Flash Parameters

All Red Flash Exit Time
6

THIS ELECTRICAL DETAIL IS FOR
THE SIGNAL DESIGN: 06-1131
DESIGNED: June 2025
SEALED: 6/12/2025
REVISED: _____

RS&H
NC FIRM LICENSE No: F-0493
8521 SIX FORKS ROAD, SUITE 400
RALEIGH, NC 27615
(919) 926-4100

Signal Upgrade - Final
Electrical Detail - Sheet 2 of 3

DOCUMENT NOT CONSIDERED FINAL UNLESS ALL SIGNATURES COMPLETED

ELECTRICAL AND PROGRAMMING DETAILS FOR:

Prepared for the Offices of:
Transportation Mobility and Safety Division
STATE OF NORTH CAROLINA DEPARTMENT OF TRANSPORTATION
Signals Management Section
750 N.Greenfield Pkwy,Garner,NC 27529

SR 1102 (Gillis Hill Road)
at
SR 1112 (Stoney Point Road)

Division 6 Cumberland County Fayetteville

PLAN DATE:	June 2025	REVIEWED BY:	O. Drobny
PREPARED BY:	S.G. Haynie	REVIEWED BY:	_____

REVISIONS	INIT.	DATE

SEAL
NORTH CAROLINA PROFESSIONAL SEAL 029531 ENGINEER STEVEN G. HAYNIE

DocuSigned by: Steven G. Haynie 6/12/2025
DESIGN SIGNATURE DATE
SIG. INVENTORY NO. 06-1131

$$$$$$$$SYSTIME$$$$$$
$$$$$$$$SYSTIME$$$$$$DGN
$$USERNAME$$$$

Docusign Envelope ID: 996831A4-A229-401E-B3E7-9B9D35189B2

MAXTIME ALTERNATE PHASING ACTIVATION DETAIL

To run alternate phasing, select a Pattern that is programmed to run Overlap Plan 2 and Detector Plan 2.
A Pattern can be selected through the scheduler or manually by changing the Operational Mode.

PHASING	OVERLAP PLAN	VEH DET PLAN
ACTIVE PLAN REQUIRED TO RUN DEFAULT PHASING	1	1
ACTIVE PLAN REQUIRED TO RUN ALTERNATE PHASING	2	2

ALTERNATE PHASING CHANGE SUMMARY

THE FOLLOWING IS A SUMMARY OF WHAT TAKES PLACE WHEN OVERLAP PLAN 2 AND VEHICLE DETECTOR PLAN 2 ACTIVATE TO CALL THE "ALTERNATE PHASING":

OVERLAP PLAN 2: Modifies overlap included phases for heads 31 and 71 to run protected turns only.

VEH DET PLAN 2: Disables phase 8 call on loop 3A and reduces delay time for phase 3 call on loop 3A to 3 seconds.

Disables phase 4 call on loop 7A and reduces delay time for phase 7 call on loop 7A to 3 seconds.

OUTPUT CHANNEL CONFIGURATION

Front Panel
Main Menu >Controller >More>Channels>Channels Config

Web Interface
Home >Controller >Advanced IO>Channels>Channel Configuration

Channel Configuration

Channel	Control Type	Control Source	Flash Yellow	Flash Red	Flash Alt	MMU Channel
1	Phase Vehicle	1		X	X	1
2	Phase Vehicle	2		X		2
3	Phase Vehicle	3		X	X	3
4	Phase Vehicle	4		X		4
5	Phase Vehicle	5		X		5
6	Phase Vehicle	6		X	X	6
7	Phase Vehicle	7		X		7
8	Phase Vehicle	8		X	X	8
9	Overlap	1		X	X	9
10	Overlap	2		X	X	10
11	Overlap	3		X		11
12	Overlap	4		X		12
13	Phase Ped	2				13
14	Phase Ped	4				14
15	Phase Ped	6				15
16	Phase Ped	8				16
17	Overlap	5		X	X	17
18	Overlap	6		X		18

MAXTIME DETECTOR PROGRAMMING DETAIL FOR ALTERNATE PHASING LOOPS 3A & 7A

Front Panel
Main Menu >Controller >Detector >Veh Det Plans

Web Interface
Home >Controller >Detector Configuration >Vehicle Detectors

In the table view of web interface right click on "Detector" in the top left corner of the table. Copy the entire contents of Detector Plan 1. Paste Detector Plan 1 into Detector Plan 2. Modify Detector Plan 2 as shown below and save changes.

Plan 2

3A

Detector	Call Phase	Delay
7	3	3:0
30	0	-

7A

Detector	Call Phase	Delay
21	7	3:0
32	0	-

MAXTIME ALTERNATE PHASING PATTERN PROGRAMMING DETAIL

Front Panel
Main Menu >Controller >Coordination >Patterns

Web Interface
Home >Controller >Coordination >Patterns

Pattern Parameters

Pattern	Veh Det Plan	Overlap Plan
*	2	2

* The Pattern number(s) are to be determined by the Division and/or City Traffic Engineer.

THIS ELECTRICAL DETAIL IS FOR
THE SIGNAL DESIGN: 06-1131
DESIGNED: June 2025
SEALED: 6/12/2025
REVISED: _____

RS&H
NC FIRM LICENSE No: F-0493
8521 SIX FORKS ROAD, SUITE 400
RALEIGH, NC 27615
(919) 926-4100

Signal Upgrade - Final
Electrical Detail - Sheet 3 of 3

DOCUMENT NOT CONSIDERED FINAL UNLESS ALL SIGNATURES COMPLETED

ELECTRICAL AND PROGRAMMING DETAILS FOR:

Prepared for the Offices of:
Transportation Mobility and Safety Division
STATE OF NORTH CAROLINA
DEPT. OF TRANSPORTATION
Signals Management Section
750 N.Greenfield Pkwy,Garner,NC 27529

SR 1102 (Gillis Hill Road)
at
SR 1112 (Stoney Point Road)

Division 6 Cumberland County Fayetteville

PLAN DATE:	June 2025	REVIEWED BY:	D. Drobny
PREPARED BY:	S.G. Haynie	REVIEWED BY:	----------

REVISIONS	INIT.	DATE

SEAL
NORTH CAROLINA PROFESSIONAL SEAL 029531 ENGINEER STEVEN G. HAYNIE

DocuSigned by: Steven G. Haynie 6/12/2025
DESIGNER SIGNATURE DATE

SIG. INVENTORY NO. 06-1131

$$$$$$SYSTIME$$$$$$
$$$$$$SYSTIME$$$$$$
$$$$$$SESSION$$$$$$$$$$$$$$$$$$$$$$$$$$$$
$$$$$$USERNAME$$$$

Docusign Envelope ID: 996831A4-A229-401E-B3E7-9B9D35618 9B2

PROJECT REFERENCE NO.	SHEET NO.
U-5798B	Sig. 5.0

PHASING DIAGRAM

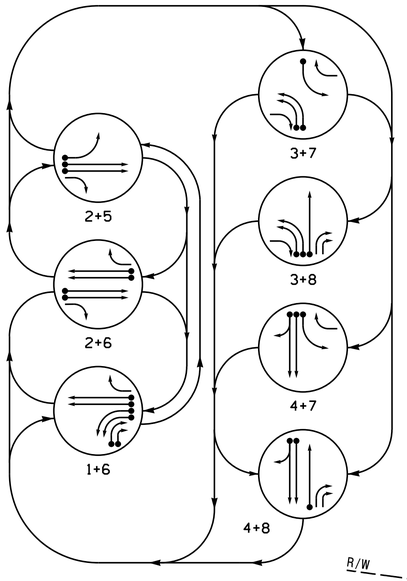

PHASING DIAGRAM DETECTION LEGEND

- DETECTED MOVEMENT
- UNDETECTED MOVEMENT (OVERLAP)
- UNSIGNALIZED MOVEMENT
- PEDESTRIAN MOVEMENT

TABLE OF OPERATION

SIGNAL FACE	PHASE 1+6	2+6	2+5	3+7	3+8	4+7	4+8	FLASH
11, 12	—	R	R	R	R	R	R	R
21	R	G	G	R	R	R	R	R
22	R	G	G	R/—	R/—	R	R	R
31, 32	R	R	R	—	—	R	R	R
41, 42, 43	R	R	R	R	R	G	G	R
51	R	R	—	R	R	R	R	R
61	G	G	R	R	R	R	R	R
62	G	G	R	R/—	R	R/—	R	R
71	R	R	R	—	R	—	R	R
81, 82, 85	R	R	R	R	G	R	G	R
83, 84	—	R	R	R	—	R	—	R

SIGNAL FACE I.D.

All Heads L.E.D.

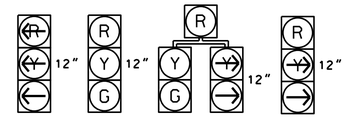

11, 12
31, 32
51
71

21
41, 42, 43
61
81, 82, 85

22
62

83, 84

MAXTIME DETECTOR INSTALLATION CHART

DETECTOR					PROGRAMMING							
LOOP	SIZE (FT)	DISTANCE FROM STOPBAR (FT)	TURNS	NEW LOOP	CALL PHASE	DELAY TIME	EXTEND TIME	EXTEND	ADDED INITIAL	CALL	DELAY DURING GREEN	NEW CARD
1A	6X60	0	2-4-2	-	1	-	-	X	-	X	-	-
1B	6X60	0	2-4-2	-	1	-	-	X	-	X	-	-
1C	6X40	0	2-4-2	-	1	15	-	X	-	X	-	-
1D	6X40	0	2-4-2	-	1	15	-	X	-	X	-	-
2A	6X6	420	6	-	2	-	-	X	X	X	-	-
2B	6X6	420	6	-	2	-	-	X	X	X	-	-
3A	6X40	0	2-4-2	-	3	-	-	X	-	X	-	-
3B	6X40	0	2-4-2	-	3	-	-	X	-	X	-	-
4A	6X40	0	2-4-2	-	4	-	-	X	-	X	-	-
4B	6X40	0	2-4-2	-	4	10	-	X	-	X	-	-
5A	6X40	0	2-4-2	-	5	-	-	X	-	X	-	-
6A	6X6	420	6	-	6	-	-	X	X	X	-	-
6B	6X6	420	6	-	6	-	-	X	X	X	-	-
7A	6X40	0	2-4-2	-	7	3	-	X	-	X	-	-
8A	6X40	0	2-4-2	-	8	-	-	X	-	X	-	-
S4A	6X6	+180	4	-	-	-	-	-	-	-	-	-
S4B	6X6	+180	3	-	-	-	-	-	-	-	-	-
S8A	6X6	+175	4	-	-	-	-	-	-	-	-	-

7 Phase
Fully Actuated
Fayetteville Signal System

NOTES

1. Refer to "Roadway Standard Drawings NCDOT" dated January 2024 and "Standard Specifications for Roads and Structures" dated January 2024.
2. Do not program signal for late night flashing operation unless otherwise directed by the Engineer.
3. Phase 3 and/or phase 7 may be lagged.
4. The order of phase 1 and phase 5 may be reversed, but phase 1 and phase 5 shall not operate simultaneously.
5. Set all detector units to presence mode.
6. Install new controller in existing cabinet.
7. Maximum times shown in timing chart are for free-run operation only. Coordinated signal system timing values supersede these values.
8. Portions of some detectors not shown for clarity.

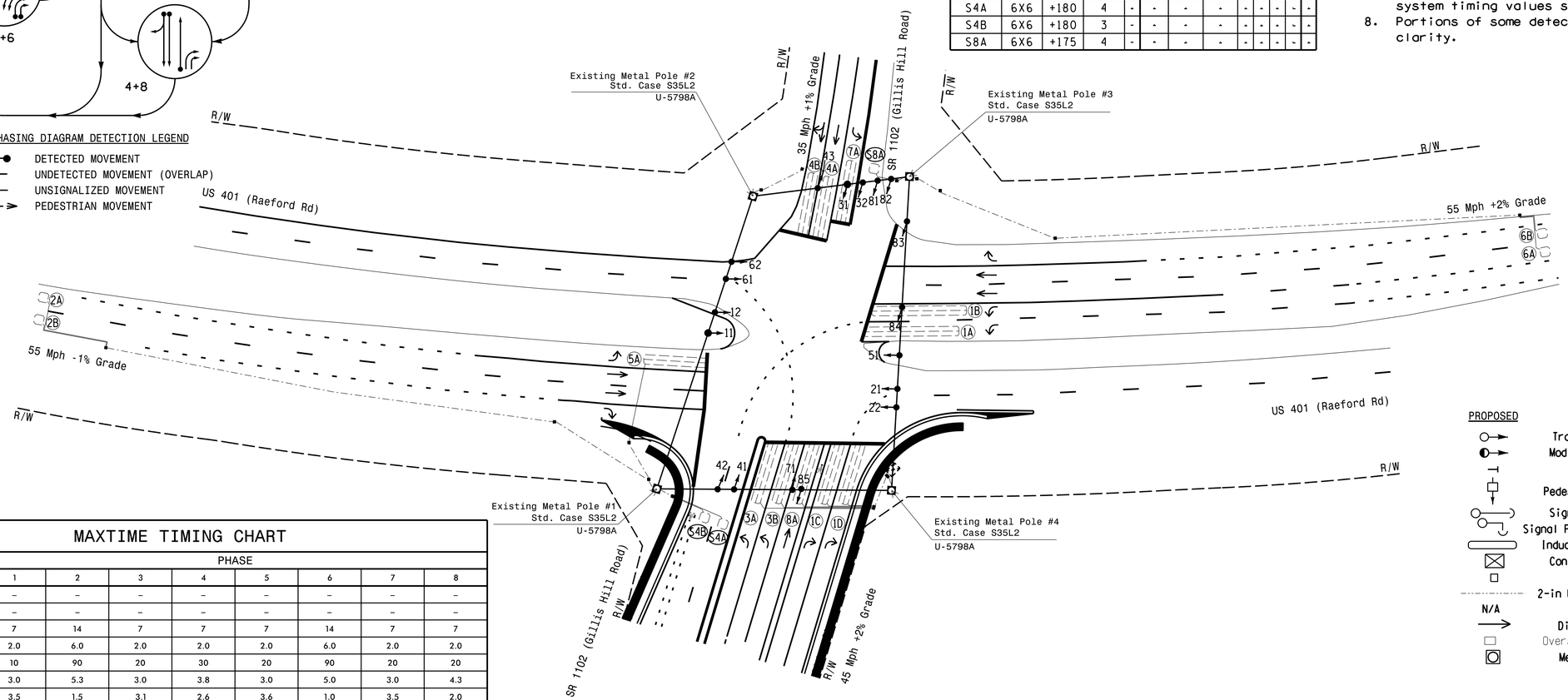

LEGEND

PROPOSED		EXISTING
	Traffic Signal Head	
	Modified Signal Head	N/A
	Sign	
	Pedestrian Signal Head	
	Signal Pole with Guy	
	Signal Pole with Sidewalk Guy	
	Inductive Loop Detector	
	Controller & Cabinet	
	Junction Box	
	2-in Underground Conduit	
N/A	Right of Way	
	Directional Arrow	
	Oversized Junction Box	
	Metal Strain Pole	

MAXTIME TIMING CHART

FEATURE	PHASE 1	2	3	4	5	6	7	8
Walk *	–	–	–	–	–	–	–	–
Ped Clear	–	–	–	–	–	–	–	–
Min Green *	7	14	7	7	7	14	7	7
Passage *	2.0	6.0	2.0	2.0	2.0	6.0	2.0	2.0
Max 1 *	10	90	20	30	20	90	20	20
Yellow Change	3.0	5.3	3.0	3.8	3.0	5.0	3.0	4.3
Red Clear	3.5	1.5	3.1	2.6	3.6	1.0	3.5	2.0
Added Initial *	–	1.8	–	–	–	1.8	–	–
Maximum Initial *	–	46	–	–	–	46	–	–
Time Before Reduction *	–	15	–	–	–	15	–	–
Time To Reduce *	–	45	–	–	–	45	–	–
Minimum Gap	–	3.4	–	–	–	3.4	–	–
Advance Walk	–	–	–	–	–	–	–	–
Non Lock Detector	X	–	X	X	X	–	X	X
Vehicle Recall	–	MIN RECALL	–	–	–	MIN RECALL	–	–
Dual Entry	–	–	–	X	–	–	–	X

* These values may be field adjusted. Do not adjust Min Green and Passage times for phases 2 and 6 lower than what is shown. Min Green for all other phases should not be lower than 4 seconds.

$$$

Docusign Envelope ID: 996831A4-A229-401E-B3E7-9B9D35618 9B2

PROJECT REFERENCE NO.	SHEET NO.
U-5798B	Sig. 5.1

18 CHANNEL IP CONFLICT MONITOR PROGRAMMING DETAIL

(remove jumpers and set switches as shown)

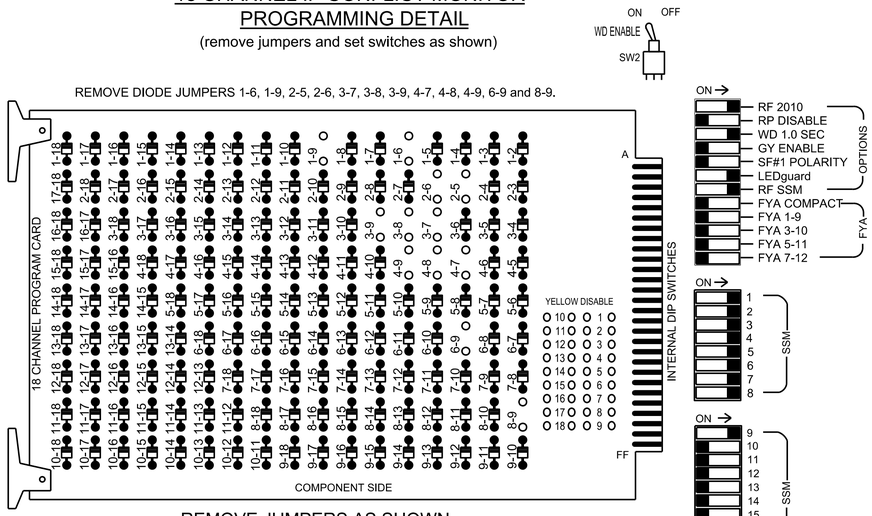

REMOVE JUMPERS AS SHOWN

NOTES:

1. Card is provided with all diode jumpers in place. Removal of any jumper allows its channels to run concurrently.
2. Ensure jumpers SEL2-SEL5 and SEL9 are present on the monitor board.
3. Ensure that the Red Enable is active at all times during normal operation.
4. Integrate monitor with Ethernet network in cabinet.

NOTES

1. To prevent "flash-conflict" problems, insert red flash program blocks for all vehicle load switches in the output file. The installer shall verify that signal heads flash in accordance with the signal plan.
2. Program phases 4 and 8 for Dual Entry.
3. Program controller to start up in phase 2 Green No Walk and 6 Green No Walk.
4. If this signal will be managed by an ATMS software, enable controller and detector logging for all detectors used at this location.
5. The cabinet and controller are part of the Fayetteville System.

EQUIPMENT INFORMATION

Controller.....2070LX
Cabinet.....332 w/ Aux
Software.....Q-Free MAXTIME
Cabinet Mount.....Base
Output File Positions.....18 With Aux. Output File
Load Switches Used.....S1,S2,S4,S5,S7,S8, S10,S11,AUX S1
Phases Used.....1,2,3,4,5,6,7,8
Overlap "1".....*
Overlap "2".....NOT USED
Overlap "3".....NOT USED
Overlap "4".....NOT USED

*See overlap programming detail on sheet 2

SIGNAL HEAD HOOK-UP CHART

LOAD SWITCH NO.	S1	S2	S3	S4		S5	S6	S7	S8	S9	S10		S11	S12	AUX S1	AUX S2	AUX S3	AUX S4	AUX S5	AUX S6
CMU CHANNEL NO.	1	2	13	3		4	14	5	6	15	7		8	16	9	10	17	11	12	18
PHASE	1	2	2 PED	3		4	4 PED	5	6	6 PED	7		8	8 PED	OL1	OL2	SPARE	OL3	OL4	SPARE
SIGNAL HEAD NO.	11,12	21,22	NU	31,32	22	41 42,43	NU	51	61,62	NU	71	62	81 82,85	NU	83,84	NU	NU	NU	NU	NU
RED		128				101			134				107		A121					
YELLOW		129				102			135				108							
GREEN		130				103			136				109							
RED ARROW	125			116				131			122									
YELLOW ARROW	126			117	117			132			123	123			A122					
GREEN ARROW	127			118	118			133			124	124			A123					

NU = Not Used

INPUT FILE POSITION LAYOUT

(front view)

		1	2	3	4	5	6	7	8	9	10	11	12	13	14
FILE "I"	U	Ø 1 1A	Ø 1 1C	Ø 2 2A	SLOT EMPTY	Ø 3 3A	Ø 4 4A	SLOT EMPTY	SLOT EMPTY	SYS. DET. S4A	SLOT EMPTY	SLOT EMPTY	SLOT EMPTY	SLOT EMPTY	FS DC ISOLATOR
	L	Ø 1 1B	Ø 1 1D	Ø 2 2B		Ø 3 3B	Ø 4 4B			SYS. DET. S4B					ST DC ISOLATOR
FILE "J"	U	Ø 5 5A	Ø 6 6A	SLOT EMPTY	SLOT EMPTY	Ø 7 7A	Ø 8 8A	SLOT EMPTY	SLOT EMPTY	SYS. DET. S8A	SLOT EMPTY	SLOT EMPTY	SLOT EMPTY	SLOT EMPTY	SLOT EMPTY
	L	NOT USED	Ø 6 6B			NOT USED	NOT USED			NOT USED					

EX. : 1A, 2A, ETC. = LOOP NO.'S

FS = FLASH SENSE
ST = STOP TIME

INPUT FILE CONNECTION & PROGRAMMING CHART

LOOP NO.	LOOP TERMINAL	INPUT FILE POS.	PIN NO.	INPUT POINT	DETECTOR NO.	CALL PHASE	DELAY TIME	EXTEND TIME	EXTEND	ADDED INITIAL	CALL	DELAY DURING GREEN
1A	TB2-1,2	I1U	56	18	1	1	...	...	X	_	X	_
1B	TB2-3,4	I1L	56	18	1	1	...	...	X	_	X	_
1C	TB2-5,6	I2U	39	1	2	1	15.0	...	X	_	X	_
1D	TB2-7,8	I2L	43	5	3	1	15.0	...	X	_	X	_
2A	TB2-9,10	I3U	63	29	4	2	...	...	X	X	X	_
2B	TB2-11,12	I3L	76	42	5	2	...	...	X	X	X	_
3A	TB4-5,6	I5U	58	20	7	3	...	...	X	_	X	_
3B	TB4-7,8	I5L	58	20	7	3	...	...	X	_	X	_
4A	TB4-9,10	I6U	41	3	8	4	...	...	X	_	X	_
4B	TB4-11,12	I6L	45	7	9	4	10.0	...	X	_	X	_
5A	TB3-1,2	J1U	55	17	15	5	...	...	X	_	X	_
6A	TB3-5,6	J2U	40	2	16	6	...	...	X	X	X	_
6B	TB3-7,8	J2L	44	6	17	6	...	...	X	X	X	_
7A	TB5-5,6	J5U	57	19	21	7	3.0	...	X	_	X	_
8A	TB5-9,10	J6U	42	4	22	8	...	...	X	_	X	_
*S4A	TB6-9,10	I9U	60	22	13	SYS	...	...	-	_	-	_
*S4B	TB6-11,12	I9L	62	24	14	SYS	...	...	-	_	-	_
*S8A	TB7-9,10	J9U	59	21	27	SYS	...	...	-	_	-	_

*System detector only. Remove any assigned vehicle phase.

INPUT FILE POSITION LEGEND: J2L
FILE J
SLOT 2
LOWER

THIS ELECTRICAL DETAIL IS FOR
THE SIGNAL DESIGN: 06-0849
DESIGNED: June 2025
SEALED: 6/12/2025
REVISED: N/A

Electrical Detail - Sheet 1 of 2

DOCUMENT NOT CONSIDERED FINAL UNLESS ALL SIGNATURES COMPLETED

ELECTRICAL AND PROGRAMMING DETAILS FOR:

US 401 (S Raeford Road)
at
SR 1102 (Gillis Hill Road)

Division 6 Cumberland County Fayetteville

PLAN DATE: June 2025 REVIEWED BY: D. Drobny
PREPARED BY: S.G. Haynie REVIEWED BY: _____

REVISIONS	INIT.	DATE

Prepared for the Offices of:
State of North Carolina Department of Transportation Mobility and Safety Division Traffic Engineering Branch Signals Management Section
750 N.Greenfield Pkwy,Garner,NC 27529

RS&H
NC FIRM LICENSE No: F-0493
8521 SIX FORKS ROAD, SUITE 400
RALEIGH, NC 27615
(919) 926-4100

SEAL
NORTH CAROLINA PROFESSIONAL SEAL 029531 ENGINEER STEVEN G. HAYNIE

DocuSigned by: Steven G. Haynie 6/12/2025
DESIGNED SIGNATURE DATE
SIG. INVENTORY NO. 06-0849

$$$$$$$$SCTLNG$$$$$
$$$$$$$$SIGNAME$$$$$
$$$$$$$$SIGDON$$$$$$$$

Docusign Envelope ID: 996831A4-A229-401E-B3E7-9B9D35618 9B2

PROJECT REFERENCE NO.	SHEET NO.
U-5798B	Sig. 5.2

OVERLAP PROGRAMMING

Front Panel
Main Menu >Controller >Overlap >Overlap Parameters/Overlap Timings

Web Interface
Home >Controller >Overlap Configuration >Overlaps

Overlap Plan 1

Overlap	1
Type	Normal
Included Phases	1, 8
Modifier Phases	-
Modifier Overlaps	-
Trail Green	0
Trail Yellow	0.0
Trail Red	0.0

COMPATIBILITY

Front Panel
Main Menu >Controller >Sequence & Phs Config>No Served Phase Plans

Web Interface
Home >Controller >Phase Configuration>No Served Phase Plans

Sequence 1

Phase	No Serve Phase
1	5
2	-
3	-
4	-
5	-
6	-
7	-
8	-

SEQUENCE DETAIL

Front Panel
Main Menu >Controller >Sequence & Phs Config>Sequences

Web Interface
Home >Controller >Sequence

Sequence 1

Ring	Sequence Data
1	1,2,a,3,4,b -
2	6,5,a,7,8,b -

OUTPUT CHANNEL CONFIGURATION

Front Panel
Main Menu >Controller >More>Channels>Channels Config

Web Interface
Home >Controller >Advanced IO>Channels>Channel Configuration

Channel Configuration

Channel	Control Type	Control Source	Flash Yellow	Flash Red	Flash Alt	MMU Channel
1	Phase Vehicle	1		X	X	1
2	Phase Vehicle	2		X		2
3	Phase Vehicle	3		X	X	3
4	Phase Vehicle	4		X		4
5	Phase Vehicle	5		X		5
6	Phase Vehicle	6		X	X	6
7	Phase Vehicle	7		X		7
8	Phase Vehicle	8		X	X	8
9	Overlap	1		X	X	9
10	Overlap	2		X	X	10
11	Overlap	3		X		11
12	Overlap	4		X		12
13	Phase Ped	2				13
14	Phase Ped	4				14
15	Phase Ped	6				15
16	Phase Ped	8				16
17	Overlap	5		X	X	17
18	Overlap	6		X		18

MAXTIME STARTUP AND SOFTWARE FLASH PROGRAMMING DETAIL

Front Panel
Main Menu >Controller >Unit

Web Interface
Home >Controller >Unit

Modify parameters as shown below and save changes.

Start Up Parameters

StartUp Clearance Hold
6

Unit Flash Parameters

All Red Flash Exit Time
6

THIS ELECTRICAL DETAIL IS FOR
THE SIGNAL DESIGN: 06-0849
DESIGNED: June 2025
SEALED: 6/12/2025
REVISED: N/A

RS&H
NC FIRM LICENSE No: F-0493
8521 SIX FORKS ROAD, SUITE 400
RALEIGH, NC 27615
(919) 926-4100

Electrical Detail - Sheet 2 of 2

DOCUMENT NOT CONSIDERED FINAL UNLESS ALL SIGNATURES COMPLETED

ELECTRICAL AND PROGRAMMING DETAILS FOR:

Prepared for the Offices of:
Transportation Mobility and Safety Division
STATE OF NORTH CAROLINA DEPARTMENT OF TRANSPORTATION
Signals Management Section
750 N.Greenfield Pkwy,Garner,NC 27529

US 401 (S Raeford Road)
at
SR 1102 (Gillis Hill Road)

Division 6 Cumberland County Fayetteville

PLAN DATE:	June 2025	REVIEWED BY:	O. Drobny
PREPARED BY:	S.G. Haynie	REVIEWED BY:	----------

REVISIONS	INIT.	DATE

SEAL
NORTH CAROLINA PROFESSIONAL SEAL 029531 ENGINEER STEVEN G. HAYNIE

DocuSigned by:
Steven G. Haynie
DEV9DC06A5D4496...
6/12/2025
SIGNATURE DATE

SIG. INVENTORY NO. 06-0849

$$$

Docusign Envelope ID: 996831A4-A229-401E-B3E7-9B9D35618 9B2

PROJECT REFERENCE NO.	SHEET NO.
U-5798B	Sig. 6.0

DEFAULT PHASING DIAGRAM

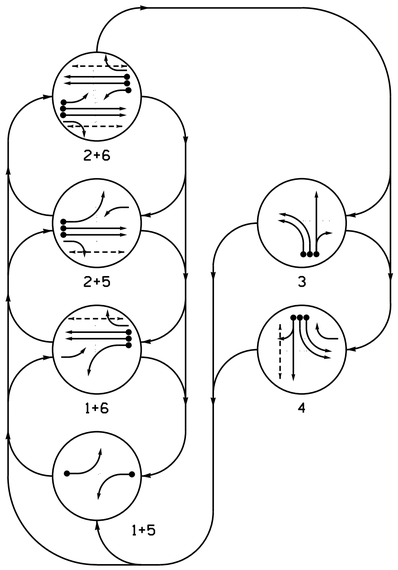

DEFAULT PHASING TABLE OF OPERATION

SIGNAL FACE	PHASE 1+5	1+6	2+5	2+6	3	4	FLASH
11	—	—	FY	FY	~~R~~	~~R~~	~~R~~
21, 22	R	R	G	G	R	R	R
23	R	R	FY	FY	R	R	R
31, 32	~~R~~	~~R~~	~~R~~	~~R~~	—	~~R~~	~~R~~
33, 34	R	R	R	R	G	R	R
41, 42	~~R~~	~~R~~	~~R~~	~~R~~	~~R~~	—	~~R~~
43, 44	R	R	R	R	R	G	R
51	—	FY	—	FY	~~R~~	~~R~~	~~R~~
61, 62	R	G	R	G	R	R	R
63	R	FY	R	FY	R	—	R
P21, P22	DW	DW	W	W	DW	DW	DRK
P41, P42	DW	DW	DW	DW	DW	W	DRK
P61, P62	DW	W	DW	W	DW	DW	DRK

ALTERNATE PHASING DIAGRAM

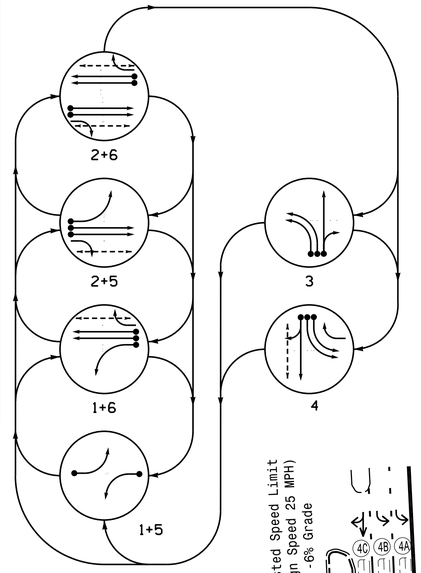

ALTERNATE PHASING TABLE OF OPERATION

SIGNAL FACE	PHASE 1+5	1+6	2+5	2+6	3	4	FLASH
11	—	—	~~R~~	~~R~~	~~R~~	~~R~~	~~R~~
21, 22	R	R	G	G	R	R	R
23	R	R	FY	FY	R	R	R
31, 32	~~R~~	~~R~~	~~R~~	~~R~~	—	~~R~~	~~R~~
33, 34	R	R	R	R	G	R	R
41, 42	~~R~~	~~R~~	~~R~~	~~R~~	~~R~~	—	~~R~~
43, 44	R	R	R	R	R	G	R
51	—	~~R~~	—	~~R~~	~~R~~	~~R~~	~~R~~
61, 62	R	G	R	G	R	R	R
63	R	FY	R	FY	R	—	R
P21, P22	DW	DW	W	W	DW	DW	DRK
P41, P42	DW	DW	DW	DW	DW	W	DRK
P61, P62	DW	W	DW	W	DW	DW	DRK

MAXTIME DETECTOR INSTALLATION CHART

DETECTOR					PROGRAMMING							
LOOP	SIZE (FT)	DISTANCE FROM STOPBAR (FT)	TURNS	NEW LOOP	CALL PHASE	DELAY TIME	EXTEND TIME	EXTEND	ADDED INITIAL CALL	DELAY DURING GREEN	NEW CARD
1A	6X40	0	2-4-2	X	1	15 +	-	X	-	X	-	-
					6 @	3	-	X	-	X	X	-
2A	6X6	300	6	X	2	-	-	X	X	X	-	-
2B	6X6	300	6	X	2	-	-	X	X	X	-	-
3A	6X40	+5	2-4-2	X	3	3	-	X	-	X	-	-
3B	6X40	+5	2-4-2	X	3	-	-	X	-	X	-	-
3C	6X40	+5	2-4-2	X	3	10	-	X	-	X	-	-
4A	6X40	0	2-4-2	X	4	3	-	X	-	X	-	-
4B	6X40	0	2-4-2	X	4	-	-	X	-	X	-	-
4C	6X40	0	2-4-2	X	4	10	-	X	-	X	-	-
5A	6X40	0	2-4-2	X	5	15 +	-	X	-	X	-	-
					2 @	3	-	X	-	X	X	-
6A	6X6	300	6	X	6	-	-	X	X	X	-	-
6B	6X6	300	6	X	6	-	-	X	X	X	-	-
S2A	6X6	+125	4	X	-	-	-	-	-	-	-	-
S2B	6X6	+125	4	X	-	-	-	-	-	-	-	-

+ Disable delay during Alternate Phasing Operation
@ Disable call during Alternate Phasing Operation

6 Phase
Fully Actuated
Fayetteville Signal System

NOTES

1. Refer to "Roadway Standard Drawings NCDOT" dated January 2024, "Standard Specifications for Roads and Structures" dated January 2024.
2. Do not program signal for late night flashing operation unless otherwise directed by the Engineer.
3. Phase 1 and/or 5 may be lagged.
4. The order of phase 3 and phase 4 may be reversed.
5. Set all detector units to presence mode.
6. Install new controller in existing cabinet.
7. Pavement markings are existing.
8. Omit "WALK" and flashing "DON'T WALK" with no pedestrian calls.
9. Program pedestrian heads to countdown the flashing "Don't Walk" time only.
10. To provide a leading pedestrian interval on phase 2, program FYA head 11 and 23 to delay for 7 seconds after the start of the phase 2 walk interval. To provide a leading pedestrian interval on phase 6, program FYA head 51 and 63 to delay for 7 seconds after the start of the phase 6 walk interval. See Electrical Details for programming.
11. The Division (City) Traffic Engineer will determine the hours of use for each phasing plan.
12. Maximum times shown in timing chart are for free-run operation only. Coordinated signal system timing values supersede these values.

PHASING DIAGRAM DETECTION LEGEND

- DETECTED MOVEMENT
- UNDETECTED MOVEMENT (OVERLAP)
- UNSIGNALIZED MOVEMENT
- PEDESTRIAN MOVEMENT

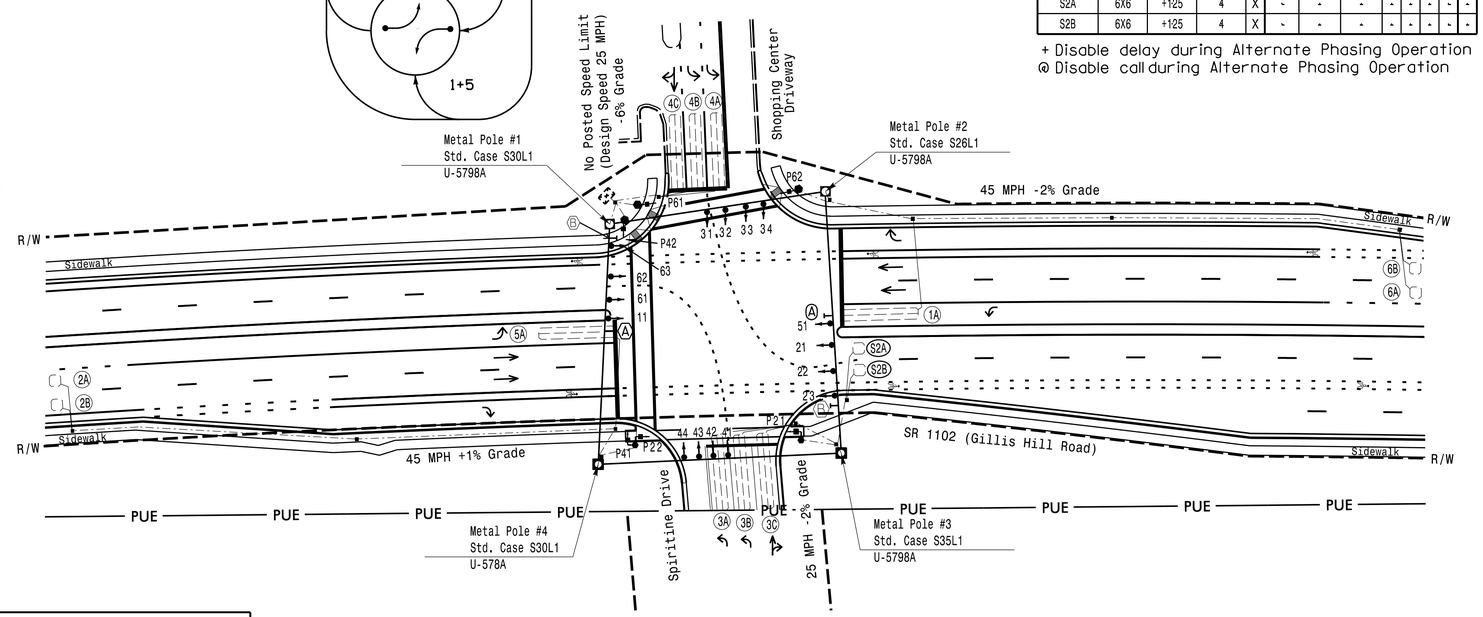

LEGEND

PROPOSED		EXISTING
	Traffic Signal Head	
	Modified Signal Head	N/A
	Sign	
	Pedestrian Signal Head With Push Button & Sign	
	Type II Signal Pedestal	
	Metal Strain Pole	
	Inductive Loop Detector	
	Controller & Cabinet	
	Junction Box	
	2-in Underground Conduit	
N/A	Right of Way	
N/A	Permanent Maintenance Easement	PUE
	Directional Arrow	
N/A	Curb Ramp	
Ⓐ	"TURNING TRAFFIC MUST YIELD TO PEDESTRIANS" Sign (R10-15L)	Ⓐ
Ⓑ	"RIGHT TURN SIGNAL" Sign (R10-10R)	Ⓑ
	Type II Signal Pedestal	

MAXTIME TIMING CHART

FEATURE	PHASE 1	2	3	4	5	6
Walk *	–	14	–	14	–	14
Ped Clear	–	15	–	25	–	14
Min Green *	7	12	7	7	7	12
Passage *	2.0	6.0	2.0	2.0	2.0	6.0
Max 1 *	20	50	30	30	20	50
Yellow Change	3.0	4.7	3.3	3.5	3.0	4.7
Red Clear	3.3	1.8	3.3	3.3	3.2	1.8
Added Initial *	–	1.8	–	–	–	1.8
Maximum Initial *	–	34	–	–	–	34
Time Before Reduction *	–	15	–	–	–	15
Time To Reduce *	–	30	–	–	–	30
Minimum Gap	–	3.0	–	–	–	3.0
Advance Walk	–	–	–	7	–	–
Non Lock Detector	X	–	X	X	X	–
Vehicle Recall	–	MIN RECALL	–	–	–	MIN RECALL
Dual Entry	–	–	–	–	–	–

* These values may be field adjusted. Do not adjust Min Green and Passage times for phases 2 and 6 lower than what is shown. Min Green for all other phases should not be lower than 4 seconds.

SIGNAL FACE I.D.

All Heads L.E.D.

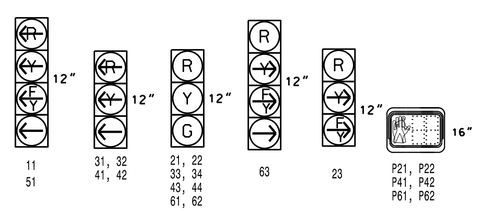

$$$$$$SYSTEMNAME$$$$
$$$$$$SYSTIMESTAMP$$$$
$$$$$$USERNAME$$$$

RS&H
NC FIRM LICENSE No: F-0493
8521 SIX FORKS ROAD, SUITE 400
RALEIGH, NC 27615
(919) 926-4100

Signal Upgrade

Prepared for the Offices of:
Transportation Mobility and Safety Division
STATE OF NORTH CAROLINA DEPARTMENT OF TRANSPORTATION
Signal Design Section
750 N.Greenfield Pkwy,Garner,NC 27529

SCALE 0 40 1"=40'

SR 1102 (Gillis Hill Road)
at
Shopping Center Driveway and
Spiritine Drive

Division 6 Cumberland County Fayetteville

PLAN DATE: June 2025	REVIEWED BY: S. G. Haynie
PREPARED BY: G. M. Moreau	REVIEWED BY:

REVISIONS	INIT.	DATE

DOCUMENT NOT CONSIDERED FINAL UNLESS ALL SIGNATURES COMPLETED

SEAL
NORTH CAROLINA PROFESSIONAL SEAL 029531 ENGINEER STEVEN G. HAYNIE

DocuSigned by:
Steven G. Haynie 6/12/2025
SIGNATURE DATE

SIG. INVENTORY NO. 06-1243

Docusign Envelope ID: 996831A4-A229-401E-B3E7-9B9D35618 9B2

PROJECT REFERENCE NO.	SHEET NO.
U-5798B	Sig. 6.1

18 CHANNEL IP CONFLICT MONITOR PROGRAMMING DETAIL

(remove jumpers and set switches as shown)

REMOVE DIODE JUMPERS 1-5, 1-6, 1-9, 1-10, 1-11, 1-15, 2-5, 2-6, 2-9, 2-10, 2-11, 2-12, 2-13, 2-15, 3-4, 3-10, 3-14, 4-10, 4-14, 5-9, 5-11, 5-12, 5-13, 6-9, 6-10, 6-11, 6-12, 6-13, 6-15, 9-10, 9-11, 9-12, 9-13, 9-15, 10-11, 10-12, 10-13, 10-14, 10-15, 11-12, 11-13, 11-15, 12-13, 12-15, AND 13-15.

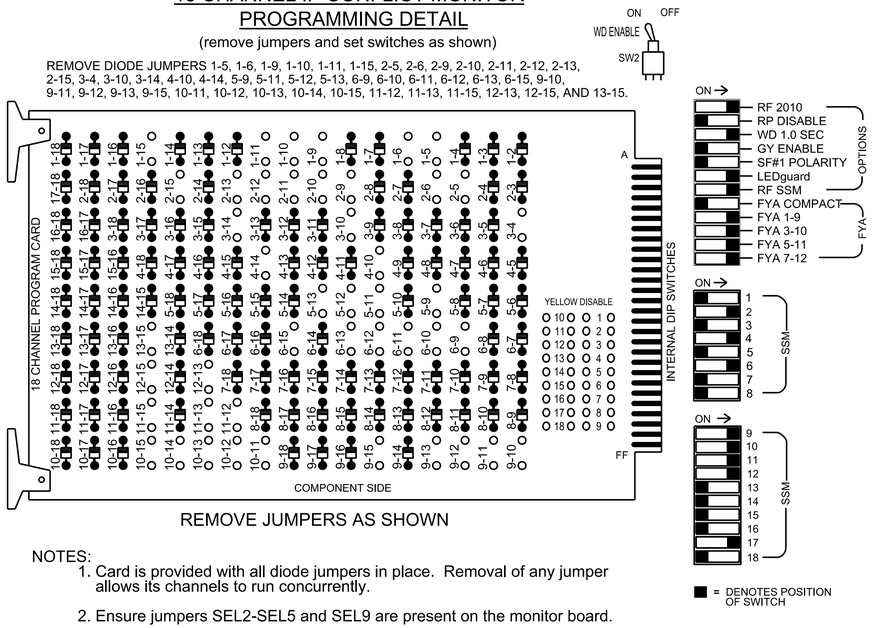

REMOVE JUMPERS AS SHOWN

NOTES:

1. Card is provided with all diode jumpers in place. Removal of any jumper allows its channels to run concurrently.
2. Ensure jumpers SEL2-SEL5 and SEL9 are present on the monitor board.
3. Ensure that the Red Enable is active at all times during normal operation.
4. Integrate monitor with Ethernet network in cabinet.

NOTES

1. To prevent "flash-conflict" problems, insert red flash program blocks for all vehicle load switches in the output file. The installer shall verify that signal heads flash in accordance with the signal plan.
2. Program controller to start up in phase 2 Green No Walk and 6 Green No Walk.
3. If this signal will be managed by an ATMS software, enable controller and detector logging for all detectors used at this location.
4. The cabinet and controller are part of the Fayetteville Signal System.

EQUIPMENT INFORMATION

Controller.....2070LX
Cabinet.....332 w/ Aux
Software.....Q-Free MAXTIME
Cabinet Mount.....Base
Output File Positions.....18 With Aux. Output File
Load Switches Used.....S1, S2, S3, S4, S5, S6, S7, S8, S9
AUX S1, AUX S2, AUX S3, AUX S4, AUX S5
Phases Used.....1, 2, 2PED, 3, 4, 4PED, 5, 6, 6PED
Overlap "1".....*
Overlap "2".....*
Overlap "3".....*
Overlap "4".....*
Overlap "5".....*
Overlap "6".....NOT USED
Overlap "7".....*

*See overlap programming detail on sheet 2

SIGNAL HEAD HOOK-UP CHART

LOAD SWITCH NO.	S1	S2	S3	S4	S5		S6	S7	S8	S9	S10	S11	S12	AUX S1	AUX S2	AUX S3		AUX S4	AUX S5	AUX S6
CMU CHANNEL NO.	1	2	13	3	4		14	5	6	15	7	8	16	9	10	17		11	12	18
PHASE	1	2	2 PED	OL7	4		4 PED	5	6	6 PED	7	8	8 PED	OL1	OL2	OL5		OL3	OL4	SPARE
SIGNAL HEAD NO.	11★	21;22	P21, P22	63★	41,42	43,44	P41, P42	51★	61;62	P61, P62	NU	NU	NU	11★	63★	31,32	33,34	51★	23★	NU
RED	·	128	·	·		101	·	·	134	·					A124		A111		A101	
YELLOW	*	129	·	*		102	·	*	135	·							A112			
GREEN	·	130	·	·		103	·	·	136	·							A113			
RED ARROW	·	·	·	·	101		·	·	·	·				A121		A111		A114		
YELLOW ARROW	·	·	·	·	102		·	·	·	·				A122	A125	A112		A115	A102	
FLASHING YELLOW ARROW	·	·	·	·			·	·	·	·				A123	A126			A116	A103	
GREEN ARROW	127	·	·	118	103		·	133	·	·						A113				
✋	·	·	113	·			104	·	·	119										
🚶	·	·	115	·			106	·	·	121										

NU = Not Used

* Denotes install load resistor. See load resistor installation detail this sheet.

★See pictorial of head wiring in detail this sheet.

FYA SIGNAL WIRING DETAIL

(wire signal heads as shown)

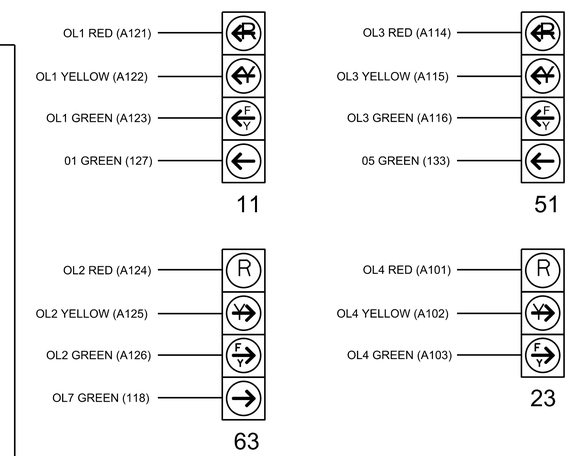

INPUT FILE POSITION LAYOUT

(front view)

		1	2	3	4	5	6	7	8	9	1O	11	12	13	14
FILE "I"	U	Ø 1 1A	Ø 2 2A	SLOT EMPTY	SLOT EMPTY	Ø 3 3A	Ø 3 3B	Ø 4 4A	SLOT EMPTY	SYS. DET. S2A	SLOT EMPTY	SLOT EMPTY	Ø 2 PED DC ISOLATOR	Ø 6 PED DC ISOLATOR	FS DC ISOLATOR
	L	NOT USED	Ø 2 2B			NOT USED	Ø 3 3C	Ø 4 4B		SYS. DET. S2B			Ø 4 PED DC ISOLATOR	NOT USED	ST DC ISOLATOR
FILE "J"	U	Ø 5 5A	Ø 4 4C	Ø 6 6A	SLOT EMPTY	SLOT EMPTY	SLOT EMPTY	SLOT EMPTY	SLOT EMPTY	SLOT EMPTY	SLOT EMPTY	SLOT EMPTY	SLOT EMPTY	SLOT EMPTY	SLOT EMPTY
	L	NOT USED	NOT USED	Ø 6 6B											

EX. : 1A, 2A, ETC. = LOOP NO.'S

FS = FLASH SENSE
ST = STOP TIME

NOTE: Remove jumper from J1-W to I4-W and from I1-W to J4-W if present.

INPUT FILE CONNECTION & PROGRAMMING CHART

LOOP NO.	LOOP TERMINAL	INPUT FILE POS.	PIN NO.	INPUT POINT	DETECTOR NO.	CALL PHASE	DELAY TIME	EXTEND TIME	EXTEND	ADDED INITIAL	CALL	DELAY DURING GREEN
1A	TB2-1,2	I1U	56	18	1★	1	15.0	...	X	_	X	_
				-	29★	6	3.0	...	X	_	X	X
2A	TB2-5,6	I2U	39	1	2	2	...	...	X	X	X	_
2B	TB2-7,8	I2L	43	5	3	2	...	...	X	X	X	_
3A	TB4-5,6	I5U	58	20	7	3	3.0	...	X	_	X	_
3B	TB4-9,10	I6U	41	3	8	3	...	...	X	_	X	_
3C	TB4-11,12	I6L	45	7	9	3	10.0	...	X	_	X	_
4A	TB6-1,2	I7U	65	31	10	4	3.0	...	X	_	X	_
4B	TB6-3,4	I7L	78	44	11	4	...	...	X	_	X	_
4C	TB3-5,6	J2U	40	2	16	4	10.0	...	X	_	X	_
*S2A	TB6-9,10	I9U	60	22	13	SYS	...	...	-	_	-	_
*S2B	TB6-11,12	I9L	62	24	14	SYS	...	...	-	_	-	_
5A	TB3-1,2	J1U	55	17	15★	5	15.0	...	X	_	X	_
				-	31★	2	3.0	...	X	_	X	X
6A	TB3-9,10	J3U	64	30	18	6	...	...	X	X	X	_
6B	TB3-11,12	J3L	77	43	19	6	...	...	X	X	X	_
PED PUSH BUTTONS												
P21;P22	TB8-4,6	I12U	67	33	2	PED 2						
P41;P42	TB8-5,6	I12L	69	35	4	PED 4						
P61;P62	TB8-7,9	I13U	68	34	6	PED 6						

NOTE:
INSTALL DC ISOLATORS IN INPUT FILE SLOTS I12 AND I13.

*System detector only. Remove any assigned vehicle phase.

★ For the detectors to work as shown on the signal design plan, see the Detector Programming Detail for Alternate Phasing on sheet 3.

INPUT FILE POSITION LEGEND: J2L
FILE J
SLOT 2
LOWER

LOAD RESISTOR INSTALLATION DETAIL

(install resistors as shown)

ACCEPTABLE VALUES	
Value (ohms)	Wattage
1.5K - 1.9K	25W (min)
2.0K - 3.0K	10W (min)

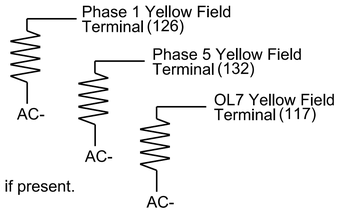

NOTE: Remove load resistor from terminal 123 if present.

COUNTDOWN PEDESTRIAN SIGNAL OPERATION

Countdown Ped Signals are required to display timing only during Ped Clearance Interval. Consult Ped Signal Module user's manual for instructions on selecting this feature.

THIS ELECTRICAL DETAIL IS FOR
THE SIGNAL DESIGN: 06-1243
DESIGNED: June 2025
SEALED: 6/12/2025
REVISED: _____

Electrical Detail - Sheet 1 of 3

DOCUMENT NOT CONSIDERED FINAL UNLESS ALL SIGNATURES COMPLETED

RS&H
NC FIRM LICENSE No: F-0493
8521 SIX FORKS ROAD, SUITE 400
RALEIGH, NC 27615
(919) 926-4100

ELECTRICAL AND PROGRAMMING DETAILS FOR:

Prepared for the Offices of:
Transportation Mobility and Safety Division
ITS & Signals Management Section
STATE OF NORTH CAROLINA DEPARTMENT OF TRANSPORTATION
750 N.Greenfield Pkwy,Garner,NC 27529

SR 1102 (Gillis Hill Road) at Shopping Center Driveway and Spiritine Drive

Division 6 Cumberland County Fayetteville

PLAN DATE: June 2025	REVIEWED BY: D. Drobny
PREPARED BY: S.G. Haynie	REVIEWED BY:

REVISIONS	INIT.	DATE

SEAL
NORTH CAROLINA PROFESSIONAL SEAL 029531 ENGINEER STEVEN G. HAYNIE

DocuSigned by: Steven G. Haynie 6/12/2025
DESIGNER SIGNATURE DATE
SIG. INVENTORY NO. 06-1243

$$$$SIGNATURE$$$$
$$$$SIGNATURE$$$$
$$$$SIGNATURE$$$$

Docusign Envelope ID: 996831A4-A229-401E-B3E7-9B9D35618 9B2

PROJECT REFERENCE NO.	SHEET NO.
U-5798B	Sig. 6.2

MAXTIME OVERLAP PROGRAMMING DETAIL FOR DEFAULT PHASING

Front Panel
Main Menu >Controller >Overlap >Overlap Parameters/Overlap Timings

Web Interface
Home >Controller >Overlap Configuration >Overlaps

Overlap Plan 1

Overlap	1	2	3	4	5	7
Type	FYA 4 - Section	FYA 4 - Section	FYA 4 - Section	FYA 4 - Section	Normal	Normal
Included Phases	2	6	6	2	3	4
Modifier Phases	1	4	5	-	-	-
Modifier Overlaps	-	-	-	-	-	-
Trail Green	0	0	0	0	0	0
Trail Yellow	0:0	0:0	0:0	0:0	0:0	0:0
Trail Red	0:0	0:0	0:0	0:0	0:0	0:0
FYA Ped Delay	7:0	7:0	7:0	7:0	0:0	0:0

FLASHER CIRCUIT MODIFICATION DETAIL

IN ORDER TO INSURE THAT SIGNALS FLASH CONCURRENTLY ON THE SAME APPROACH, MAKE THE FOLLOWING FLASHER CIRCUIT CHANGES:

1. ON REAR OF PDA - REMOVE WIRE FROM TERM. T2-4 AND TERMINATE ON T2-2.
2. ON REAR OF PDA - REMOVE WIRE FROM TERM. T2-5 AND TERMINATE ON T2-3.
3. REMOVE FLASHER UNIT 2.

THE CHANGES LISTED ABOVE TIES ALL PHASES AND OVERLAPS TO FLASHER UNIT 1.

MAXTIME OVERLAP PROGRAMMING DETAIL FOR ALTERNATE PHASING

Front Panel
Main Menu >Controller >Overlap >Overlap Parameters/Overlap Timings

Web Interface
Home >Controller >Overlap Configuration >Overlaps

In the table view of the web interface, right click on "Overlap" in the top left corner of the table. Copy the entire contents of Overlap Plan 1. Paste Overlap Plan 1 into Overlap Plan 2. Modify Overlap Plan 2 as shown below and save changes.

Overlap Plan 2

Overlap	1	2	3	4	5	7
Type	FYA 4 - Section	FYA 4 - Section	FYA 4 - Section	FYA 4 - Section	Normal	Normal
Included Phases	-	6	-	2	3	4
Modifier Phases	1	4	5	-	-	-
Modifier Overlaps	-	-	-	-	-	-
Trail Green	0	0	0	0	0	0
Trail Yellow	0:0	0:0	0:0	0:0	0:0	0:0
Trail Red	0:0	0:0	0:0	0:0	0:0	0:0
FYA Ped Delay	0:0	7:0	0:0	7:0	0:0	0:0

NOTICE INCLUDED PHASE

MAXTIME STARTUP AND SOFTWARE FLASH PROGRAMMING DETAIL

Front Panel
Main Menu >Controller >Unit

Web Interface
Home >Controller >Unit

Modify parameters as shown below and save changes.

Start Up Parameters

StartUp Clearance Hold
6

Unit Flash Parameters

All Red Flash Exit Time
6

THIS ELECTRICAL DETAIL IS FOR
THE SIGNAL DESIGN: 06-1243
DESIGNED: June 2025
SEALED: 6/12/2025
REVISED: _____

RS&H
NC FIRM LICENSE No: F-0493
8521 SIX FORKS ROAD, SUITE 400
RALEIGH, NC 27615
(919) 926-4100

Electrical Detail - Sheet 2 of 3

DOCUMENT NOT CONSIDERED FINAL UNLESS ALL SIGNATURES COMPLETED

ELECTRICAL AND PROGRAMMING DETAILS FOR:

Prepared for the Offices of:
Transportation Mobility and Safety Division
STATE OF NORTH CAROLINA
DEPT. OF TRANSPORTATION
Signals Management Section
750 N.Greenfield Pkwy,Garner,NC 27529

SR 1102 (Gillis Hill Road)
at
Shopping Center Driveway and
Spiritine Drive

Division 6 Cumberland County Fayetteville

PLAN DATE:	June 2025	REVIEWED BY:	D. Drobny
PREPARED BY:	S.G. Haynie	REVIEWED BY:	_____

REVISIONS	INIT.	DATE

SEAL
NORTH CAROLINA PROFESSIONAL SEAL 029531 ENGINEER STEVEN G. HAYNIE

DocuSigned by: Steven G. Haynie 6/12/2025
DESIGN ENGINEER SIGNATURE DATE

SIG. INVENTORY NO. 06-1243

$$$$$$SYSTIME$$$$$$
$$$$$$SYSTIME$$$$$$DDDN$$$$$$

Docusign Envelope ID: 996831A4-A229-401E-B3E7-9B9D35189B2

PROJECT REFERENCE NO.	SHEET NO.
U-5798B	Sig. 6.3

MAXTIME ALTERNATE PHASING ACTIVATION DETAIL

To run alternate phasing, select a Pattern that is programmed to run Overlap Plan 2 and Detector Plan 2.
A Pattern can be selected through the scheduler or manually by changing the Operational Mode.

PHASING	OVERLAP PLAN	VEH DET PLAN
ACTIVE PLAN REQUIRED TO RUN DEFAULT PHASING	1	1
ACTIVE PLAN REQUIRED TO RUN ALTERNATE PHASING	2	2

ALTERNATE PHASING CHANGE SUMMARY

THE FOLLOWING IS A SUMMARY OF WHAT TAKES PLACE WHEN OVERLAP PLAN 2 AND VEHICLE DETECTOR PLAN 2 ACTIVATE TO CALL THE "ALTERNATE PHASING":

OVERLAP PLAN 2: Modifies overlap included phases for heads 11 and 51 to run protected turns only.

VEH DET PLAN 2: Disables phase 6 call on loop 1A and reduces delay time for phase 1 call on loop 1A to 0 seconds.

Disables phase 2 call on loop 5A and reduces delay time for phase 5 call on loop 5A to 0 seconds.

OUTPUT CHANNEL CONFIGURATION

Front Panel
Main Menu >Controller >More>Channels>Channels Config

Web Interface
Home >Controller >Advanced IO>Channels>Channel Configuration

Channel Configuration

Channel	Control Type	Control Source	Flash Yellow	Flash Red	Flash Alt	MMU Channel
1	Phase Vehicle	1		X	X	1
2	Phase Vehicle	2		X		2
3	Overlap	7		X	X	3
4	Phase Vehicle	4		X		4
5	Phase Vehicle	5		X		5
6	Phase Vehicle	6		X	X	6
7	Phase Vehicle	7		X		7
8	Phase Vehicle	8		X	X	8
9	Overlap	1		X	X	9
10	Overlap	2		X	X	10
11	Overlap	3		X		11
12	Overlap	4		X		12
13	Phase Ped	2				13
14	Phase Ped	4				14
15	Phase Ped	6				15
16	Phase Ped	8				16
17	Overlap	5		X	X	17
18	Overlap	6		X		18

MAXTIME DETECTOR PROGRAMMING DETAIL FOR ALTERNATE PHASING LOOPS 1A & 5A

Front Panel
Main Menu >Controller >Detector >Veh Det Plans

Web Interface
Home >Controller >Detector Configuration >Vehicle Detectors

In the table view of web interface right click on "Detector" in the top left corner of the table. Copy the entire contents of Detector Plan 1. Paste Detector Plan 1 into Detector Plan 2. Modify Detector Plan 2 as shown below and save changes.

Plan 2

1A

Detector	Call Phase	Delay
1	1	0:0
29	0	-

5A

Detector	Call Phase	Delay
15	5	0:0
31	0	-

MAXTIME ALTERNATE PHASING PATTERN PROGRAMMING DETAIL

Front Panel
Main Menu >Controller >Coordination >Patterns

Web Interface
Home >Controller >Coordination >Patterns

Pattern Parameters

Pattern	Veh Det Plan	Overlap Plan
*	2	2

* The Pattern number(s) are to be determined by the Division and/or City Traffic Engineer.

THIS ELECTRICAL DETAIL IS FOR
THE SIGNAL DESIGN: 06-1243
DESIGNED: June 2025
SEALED: 6/12/2025
REVISED: _____

RS&H
NC FIRM LICENSE No: F-0493
8521 SIX FORKS ROAD, SUITE 400
RALEIGH, NC 27615
(919) 926-4100

Electrical Detail - Sheet 3 of 3

DOCUMENT NOT CONSIDERED FINAL UNLESS ALL SIGNATURES COMPLETED

ELECTRICAL AND PROGRAMMING DETAILS FOR:

Prepared for the Offices of:
Transportation Mobility and Safety Division
STATE OF NORTH CAROLINA DEPARTMENT OF TRANSPORTATION
Signals Management Section
750 N.Greenfield Pkwy,Garner,NC 27529

SR 1102 (Gillis Hill Road)
at
Shopping Center Driveway and
Spiritine Drive

Division 6 Cumberland County Fayetteville

PLAN DATE:	June 2025	REVIEWED BY:	D. Drobny
PREPARED BY:	S.G. Haynie	REVIEWED BY:	_____

REVISIONS	INIT.	DATE

SEAL
NORTH CAROLINA PROFESSIONAL SEAL 029531 ENGINEER STEVEN G. HAYNIE

DocuSigned by: Steven G. Haynie 6/12/2025
DESIGNER SIGNATURE DATE
SIG. INVENTORY NO. 06-1243

$$$$$$$$SCTLNG$$$$$
$$$$$$$$SSLNG$$$$$
$$$$$$$$SESSION$$$$$
$$$$$$$$USERNAME$$$$$

PROJECT I.D.NO.	SHEET NO.
	Sig.M1A

STATE OF NORTH CAROLINA
DIVISION OF HIGHWAYS

STANDARD DRAWINGS FOR ALL METAL POLES (LRFD)

POLE STANDARDS

NCDOT METAL POLE

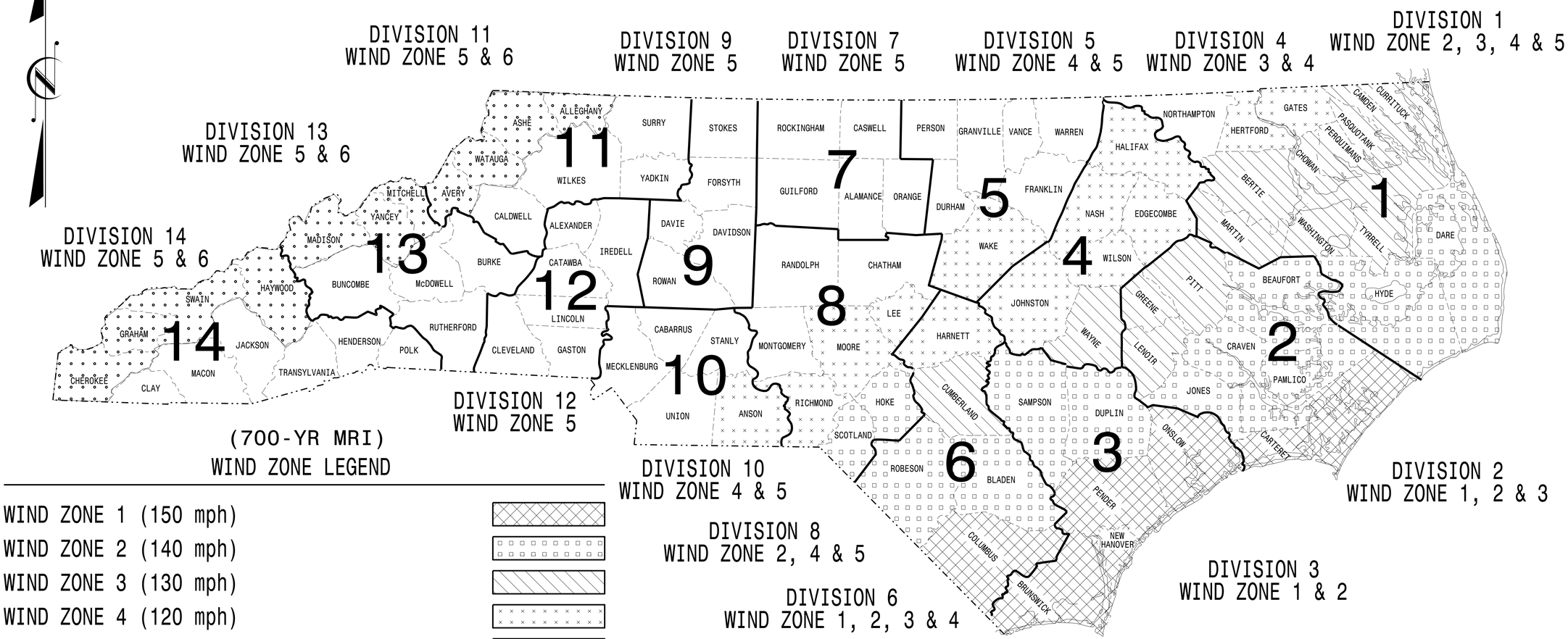

(700-YR MRI)
WIND ZONE LEGEND

WIND ZONE 1 (150 mph)
WIND ZONE 2 (140 mph)
WIND ZONE 3 (130 mph)
WIND ZONE 4 (120 mph)
WIND ZONE 5 (110 mph)
WIND ZONE 6 (135 mph) Special Wind Zone

https://connect.ncdot.gov/resources/safety/Pages/ITS-Design-Resources.aspx

Prepared in the Offices of:

Transportation Mobility and Safety Division
STATE OF NORTH CAROLINA DEPARTMENT OF TRANSPORTATION
Signal Design Section

750 N.Greenfield Pkwy.
Garner,NC 27529

Designed in conformance with the latest 2020 Interim to the 1st Edition 2015

AASHTO LRFD

Standard Specifications for Highway Signs, Luminaires, and Traffic Signals

INDEX OF PLANS

DRAWING NUMBER	DESCRIPTION
Sig. M 1A	Statewide Wind Zone Map (700–yr MRI)
Sig. M 1B	Statewide Wind Zone Map (10–yr MRI)
Sig. M 2	Typical Fabrication Details–All Metal Poles
Sig. M 3	Typical Fabrication Details–Strain Poles
Sig. M 4	Typical Fabrication Details–Mast Arm Poles
Sig. M 5	Typical Fabrication Details–Mast Arm Connection
Sig. M 6	Typical Fabrication Details–Strain Pole Attachments
Sig. M 7	Construction Details–Foundations
Sig. M 8	Standard Strain Pole Foundation–All Soil Conditions
Sig. M 9	Typical Fabrication Details–CCTV Camera Poles

MOBILITY AND SAFETY DIVISION – TRANSPORTATION SYSTEMS MANAGEMENT AND OPERATIONS UNIT

D.Y. ISHAK – STATE SIGNALS ENGINEER

K. DURIGON, P.E. – ITS AND SIGNALS STRUCTURAL ENGINEER

B. WALKER, P.E. – ITS AND SIGNALS STRUCTURAL ENGINEER

SEAL

NORTH CAROLINA PROFESSIONAL SEAL 036626 ENGINEER KEVIN C. DURIGON

DocuSigned by:
Kevin Durigon
SIGNATURE
4B23DC79B3784DA...
09/21/2023
DATE

03-OCT-2023 12:07
S:*ITSSUM*ITS Signals*Signal Design Sections*Structures*Drawings*2024 Metal Pole Std Drawings for LRFD*2024 Sig. M1A Standard All Metal Pole (700-yr MRI).dgn
kdurigon

NCDOT METAL POLE STANDARDS

PROJECT I.D.NO.	SHEET NO.
	Sig.M1B

STATE OF NORTH CAROLINA
DIVISION OF HIGHWAYS

STANDARD DRAWINGS FOR ALL METAL POLES (LRFD)

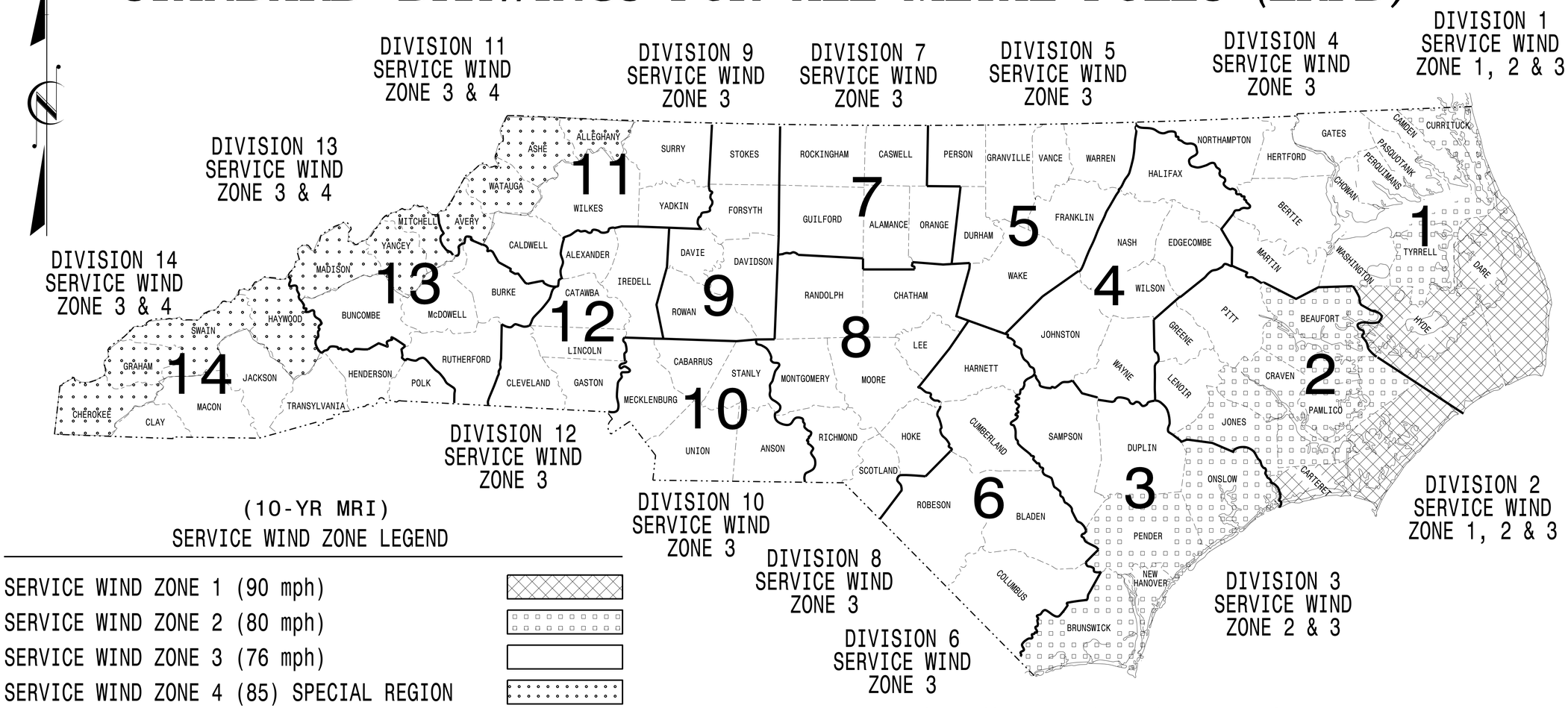

(10-YR MRI)
SERVICE WIND ZONE LEGEND

- SERVICE WIND ZONE 1 (90 mph)
- SERVICE WIND ZONE 2 (80 mph)
- SERVICE WIND ZONE 3 (76 mph)
- SERVICE WIND ZONE 4 (85) SPECIAL REGION

https://connect.ncdot.gov/resources/safety/Pages/ITS-Design-Resources.aspx

Prepared in the Offices of:

Transportation Mobility and Safety Division
Signal Design Section
750 N.Greenfield Pkwy,
Garner,NC 27529

Designed in conformance with the latest 2020 Interim to the 1st Edition 2015

AASHTO LRFD

Standard Specifications for Highway Signs, Luminaires, and Traffic Signals

INDEX OF PLANS

DRAWING NUMBER	DESCRIPTION
Sig. M 1A	Statewide Wind Zone Map (700–yr MRI)
Sig. M 1B	Statewide Wind Zone Map (10–yr MRI)
Sig. M 2	Typical Fabrication Details–All Metal Poles
Sig. M 3	Typical Fabrication Details–Strain Poles
Sig. M 4	Typical Fabrication Details–Mast Arm Poles
Sig. M 5	Typical Fabrication Details–Mast Arm Connection
Sig. M 6	Typical Fabrication Details–Strain Pole Attachments
Sig. M 7	Construction Details–Foundations
Sig. M 8	Standard Strain Pole Foundation–All Soil Conditions
Sig. M 9	Typical Fabrication Details–CCTV Camera Poles

NCDOT CONTACTS:

MOBILITY AND SAFETY DIVISION – TRANSPORTATION SYSTEMS MANAGEMENT AND OPERATIONS UNIT

D.Y. ISHAK – STATE SIGNALS ENGINEER

K. DURIGON, P.E. – ITS AND SIGNALS STRUCTURAL ENGINEER

B. WALKER, P.E. – ITS AND SIGNALS STRUCTURAL ENGINEER

SEAL

NORTH CAROLINA PROFESSIONAL SEAL 036626 ENGINEER KEVIN C. DURIGON

DocuSigned by:
Kevin Durigon
SIGNATURE
4B23DC79B3784DA...
09/21/2023
DATE

03-OCT-2023 12:21
S:\TSG\413 Signals\Design Section\Structures\Drawings\2024 Metal Pole Std Drawings for LRFD\2024 Sig. M1B Standard All Metal Pole (10-yr MRI).dgn
kcdurigon

PROJECT I.D. NO.	SHEET NO.
	Sig.M2

Fabrication Details – All Metal Poles

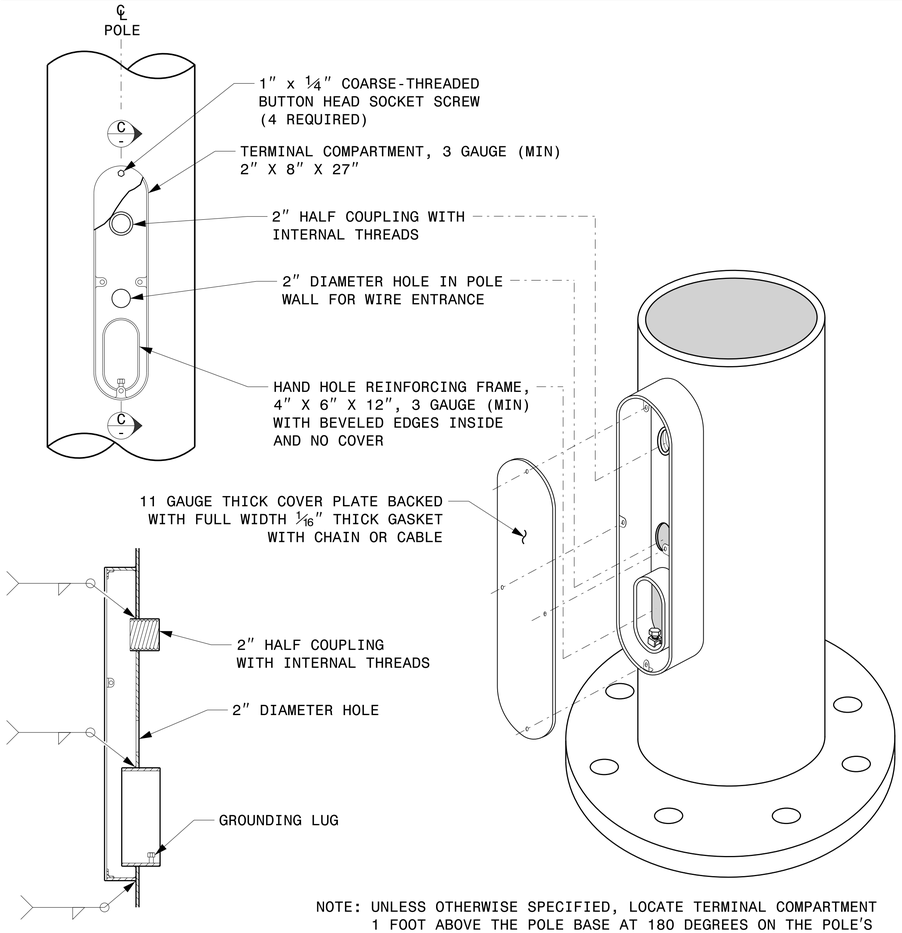

SECTION C-C

NOTE: UNLESS OTHERWISE SPECIFIED, LOCATE TERMINAL COMPARTMENT 1 FOOT ABOVE THE POLE BASE AT 180 DEGREES ON THE POLE'S RADIAL INDEX.

TERMINAL COMPARTMENT DETAIL

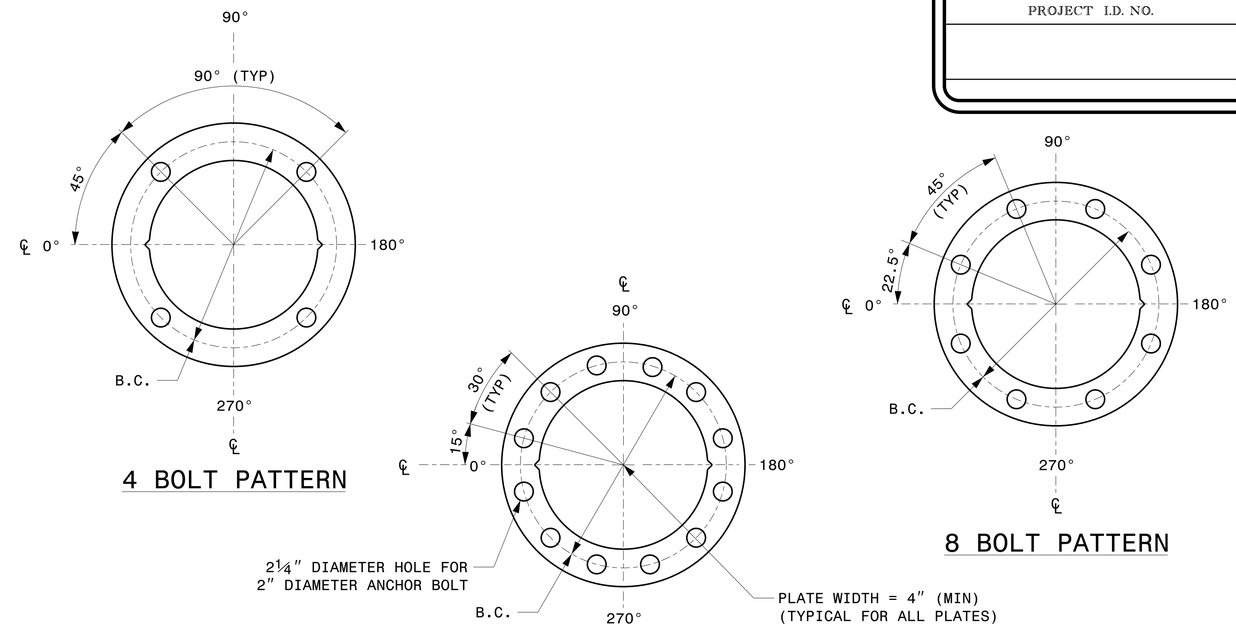

CONSTRUCT TEMPLATES AND PLATES FROM ¼″ (MIN) THICK STEEL. GALVANIZING IS NOT REQUIRED.

BASE PLATE TEMPLATE AND ANCHOR BOLT LOCK PLATE DETAILS

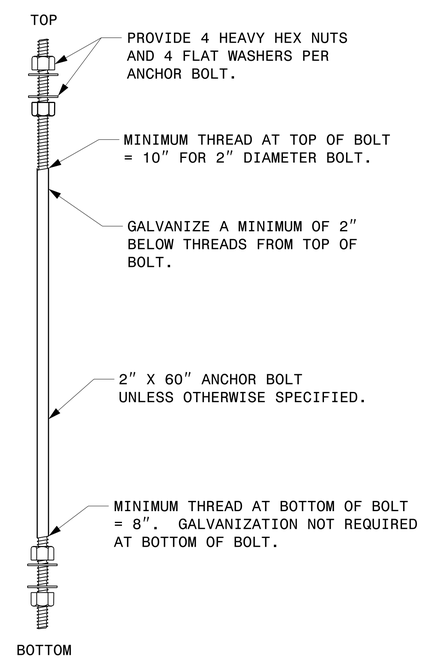

ANCHOR BOLT DETAIL

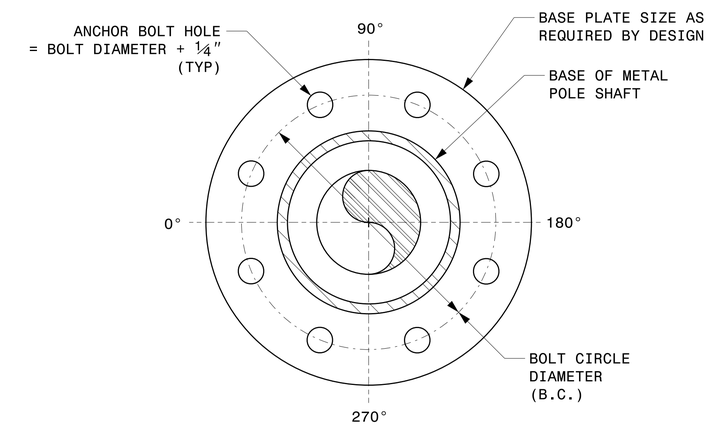

NOTE: BASE PLATE MAY BE CIRCULAR, OCTAGONAL, SQUARE OR RECTANGULAR IN SHAPE.

TYPICAL BASE PLATE DETAIL

MFG _____ MFG. DATE: MM/YY
SHAFT D/T/L/Y ----/----/----/----
ARM-A D/T/L/Y ----/----/----/----
----/----/----/----
ARM-B D/T/L/Y ----/----/----/----
----/----/----/----
A.B. DIA./B.C./L/Y ----/----/----/----
NCDOT SIG. INV. NO. _____
NCDOT POLE NO. _____

SHAFT I.D. TAG
(PROVIDE ON SHAFT OF STRAIN POLES AND MAST ARM POLE SHAFT)

MFG _____ MFG. DATE: MM/YY
SECTION D/T/L/Y ----/----/----/----
NCDOT SIG. INV. NO. _____
NCDOT POLE NO. _____

ARM I.D. TAG
(PROVIDE ON EACH SECTION OF A MULTI-SECTION MAST ARM)

NOTES:

1. D = DIAMETER, T = THICKNESS, L = LENGTH, Y = YIELD STRENGTH
2. A.B. = ANCHOR BOLT
3. B.C. = BOLT CIRCLE OF ANCHOR BOLTS
4. IF STANDARD DESIGN, INCLUDE CASE NUMBER IN ADDITION TO POLE NUMBER ON "NCDOT POLE NO." LINE.
5. SIGNAL INV. NUMBER AND POLE I.D. NUMBER. SEE DRAWING M3 AND M4 FOR MOUNTING POSITIONS OF I.D. TAGS.

IDENTIFICATION TAG DETAILS

Prepared in the Offices of:
Transportation Mobility and Safety Division
STATE OF NORTH CAROLINA DEPARTMENT OF TRANSPORTATION
Signal Design Section
750 N.Greenfield Pkwy,Garner,NC 27529

SCALE
0 NA
NONE

Typical Fabrication Details For All Metal Poles

PLAN DATE:	SEPTEMBER 2023	DESIGNED BY:	C.F.ANDREWS
PREPARED BY:	K.C. DURIGON	REVIEWED BY:	D.C. SARKAR

REVISIONS	INIT.	DATE

SEAL
NORTH CAROLINA PROFESSIONAL SEAL 036626 ENGINEER KEVIN C. DURIGON

DocuSigned by:
Kevin Durigon
SIGNATURE
4B23DC79B3784DA...
09/21/2023
DATE

03-OCT-2023 12:24
S:*MTS&SUM*TS Signals*Signal Design Section*Structures*Drawings*2024 Metal Pole Std Drawings for LRFD*2024 Sig-M2 Std. Fabrication Details-All Poles.dgn
kcdurigon

PROJECT I.D. NO.	SHEET NO.
	Sig.M3

NOTE:

1. OPENING IN POLE BASE PLATE SHALL BE EQUAL TO POLE BASE INSIDE DIAMETER MINUS 3½" BUT SHALL NOT BE LESS THAN 8½".

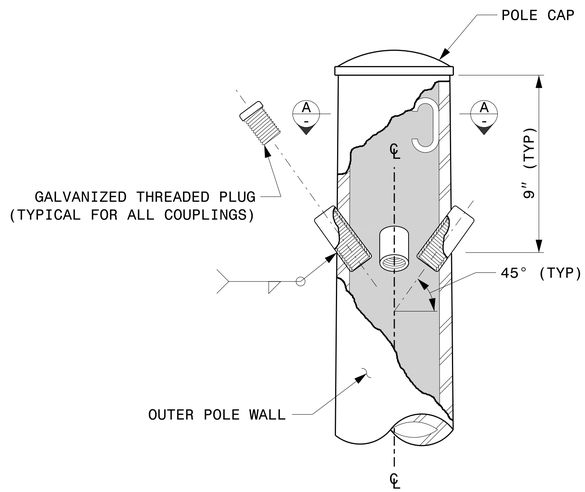

CABLE ENTRANCES AT TOP OF POLE

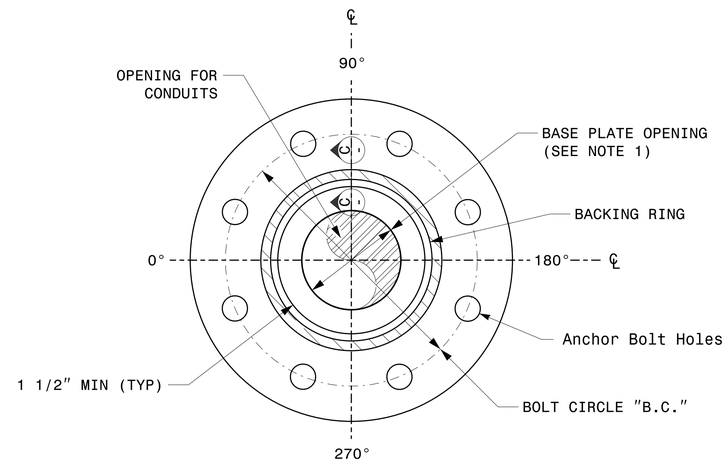

SECTION B-B

POLE BASE PLATE DETAILS
(8 AND 12 BOLT PATTERN)

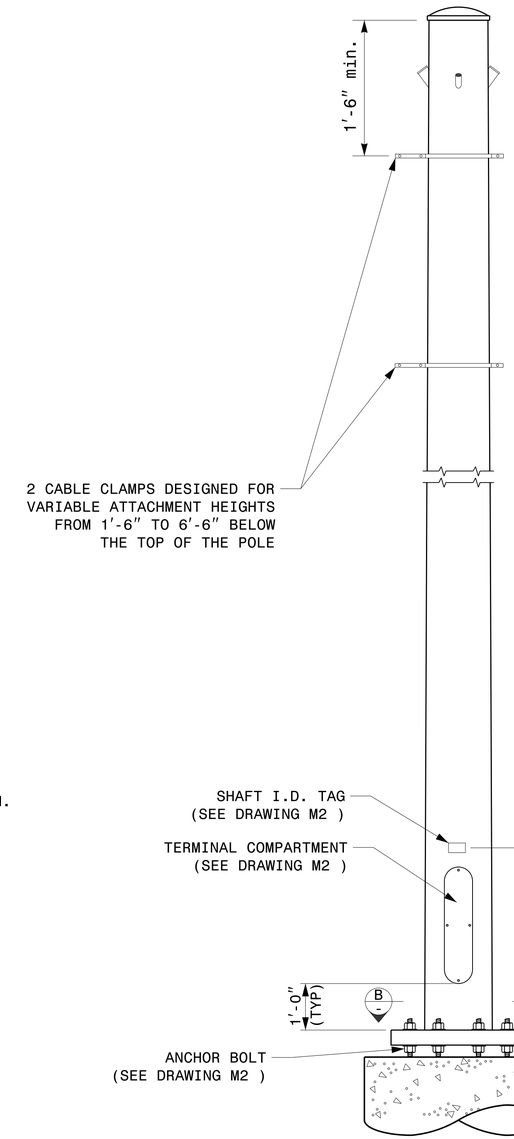

MONOTUBE STRAIN POLE

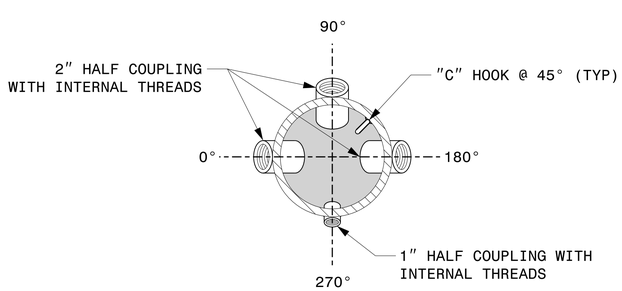

SECTION A-A

RADIAL ORIENTATION OF FACTORY INSTALLED ACCESSORIES AT TOP OF POLE

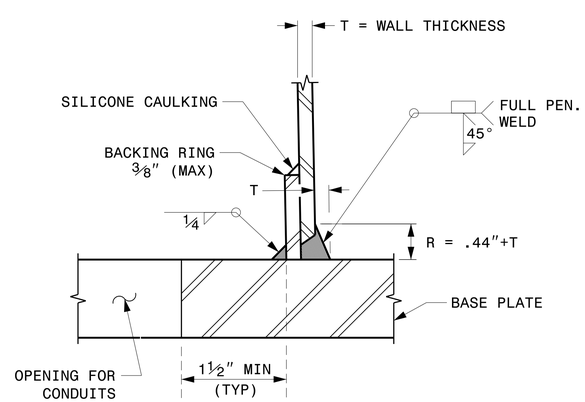

SECTION C-C

(POLE ATTACHMENT TO BASE PLATE)

FULL-PENETRATION GROOVE WELD DETAIL

Fabrication Details – Strain Poles

Prepared in the Offices of:
Transportation Mobility and Safety Division
Signal Design Section
750 N.Greenfield Pkwy,Garner,NC 27529

SCALE
0 NA
NONE

Typical Fabrication Details
For
Strain Poles

PLAN DATE:	SEPTEMBER 2023	DESIGNED BY:	K.C. DURIGON
PREPARED BY:	K.C. DURIGON	REVIEWED BY:	D.C. SARKAR

REVISIONS	INIT.	DATE

SEAL
NORTH CAROLINA PROFESSIONAL SEAL 036626 ENGINEER KEVIN C. DURIGON

DocuSigned by:
Kevin Durigon
SIGNATURE
4B23DC79B3784DA...
09/21/2023
DATE

03-OCT-2023 12:31
S:*ITSSUM\ITS Signals\Signal Design Sections\Structures\Drawings\2024 Metal Pole Std Drawings for LRFD\2024 Sig.M3 Std. Fabrication Details-Strain Poles.dgn
kcdurigon

PROJECT I.D. NO.	SHEET NO.
	Sig.M4

NOTE:

1. OPENING IN POLE BASE PLATE SHALL BE EQUAL TO POLE BASE INSIDE DIAMETER MINUS 3½" BUT SHALL NOT BE LESS THAN 8½".

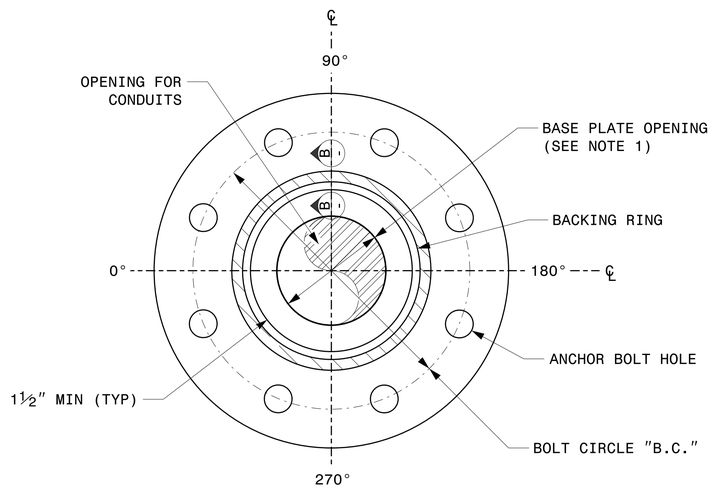

SECTION A-A
POLE BASE PLATE DETAILS

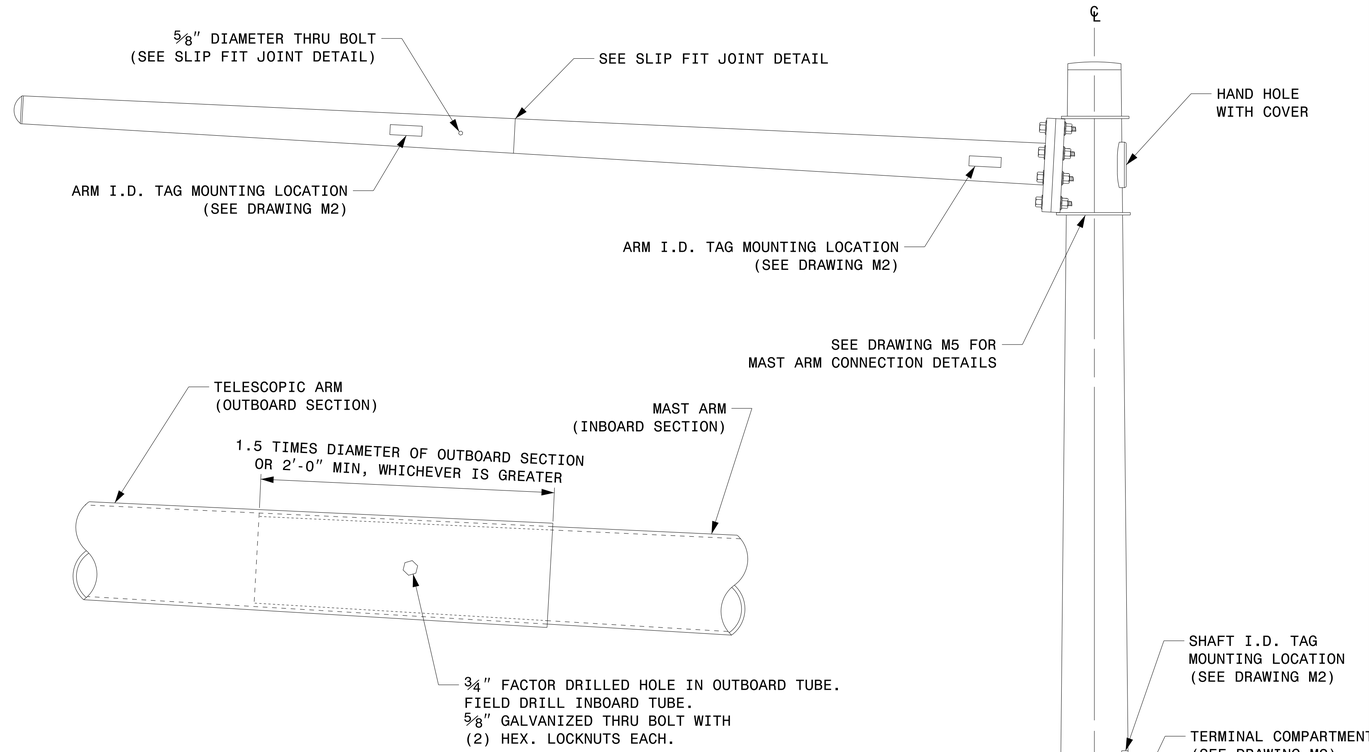

SLIP FIT JOINT DETAIL FOR MAST ARM

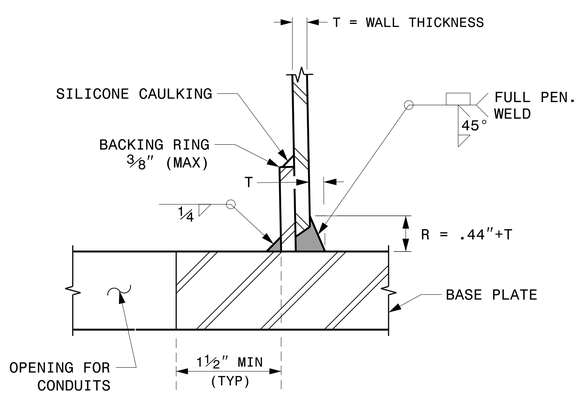

SECTION B-B
(POLE ATTACHMENT TO BASE PLATE)

FULL-PENETRATION GROOVE WELD DETAIL

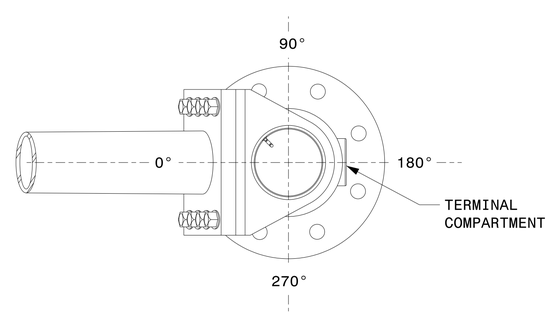

MAST ARM RADIAL ORIENTATION

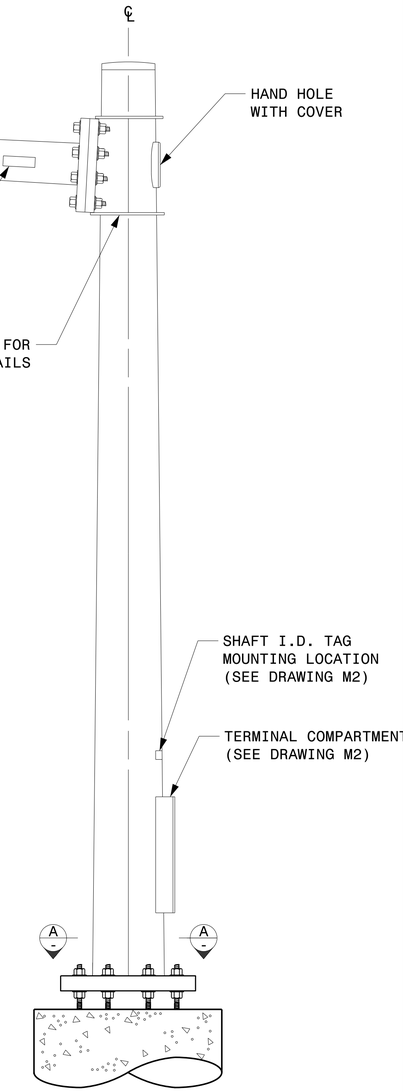

MAST ARM POLE

Fabrication Details – Mast Arm Poles

Prepared in the Offices of:
Transportation Mobility and Safety Division
Signal Design Section
750 N.Greenfield Pkwy,Garner,NC 27529

SCALE 0 NA
NONE

Typical Fabrication Details For Mast Arm Poles

PLAN DATE:	SEPTEMBER 2023	DESIGNED BY:	K.C. DURIGON
PREPARED BY:	K.C. DURIGON	REVIEWED BY:	D.C. SARKAR

REVISIONS	INIT.	DATE

SEAL
NORTH CAROLINA PROFESSIONAL SEAL 036626 ENGINEER KEVIN C. DURIGON

DocuSigned by:
Kevin Durigon
SIGNATURE
4B23DC79B3784DA...
09/21/2023
DATE

03-OCT-2023 12:25
S:\4TIS\SIGNALS\Signal Design Section\Structures\Drawings\2024 Metal Pole Std Drawings for LRFD\2024 Sig.M4 Std. Fabrication Details-Mast Arm Poles.dgn
kcdurigon

WELDED RING STIFFENED MAST ARM CONNECTION

PROJECT I.D. NO.	SHEET NO.
	Sig.M5

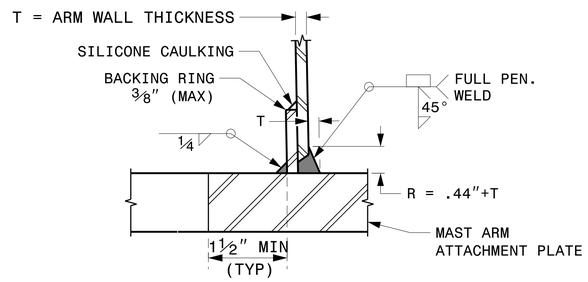

SECTION B-B
FULL-PENETRATION GROOVE WELD DETAIL

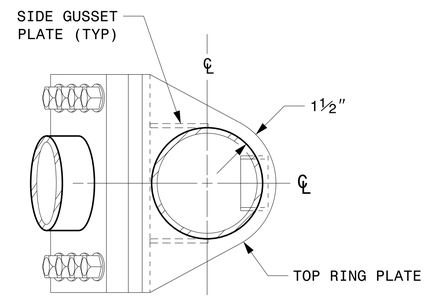

PLAN VIEW

NOTES:

1. PROVIDE A PERMANENT MEANS OF IDENTIFICATION ABOVE THE MAST ARM TO INDICATE PROPER ATTACHMENT ORIENTATION OF THE MAST ARM.
2. DESIGNER WILL DETERMINE THE SIZE OF ALL STRUCTURAL COMPONENTS, PLATES, FASTENERS, AND WELDS SHOWN UNLESS THEY ARE ALREADY SPECIFIED.
3. FABRICATOR IS RESPONSIBLE FOR PROVIDING APPROPRIATE HOLES AT DRAINAGE POINTS TO DRAIN GALVANIZING MATERIALS.
4. FOR MINIMUM EDGE DISTANCE AND NOMINAL BOLT HOLE SIZE, FOLLOW THE LATEST AISC STEEL CONSTRUCTION MANUAL.
5. PROVIDE UPPER HANDHOLE AS NECESSARY WHEN SHAFT EXTENSIONS ARE REQUIRED FOR LUMINAIRE ARMS OR CAMERA. FOR POLES WITHOUT LUMINAIRES/CAMERA, WIRING CAN BE DONE THROUGH THE TOP OF POLE.
6. ALLOWABLE RANGE OF FLANGE TILT ANGLE WILL VARY FROM 0° TO AS REQUIRED.

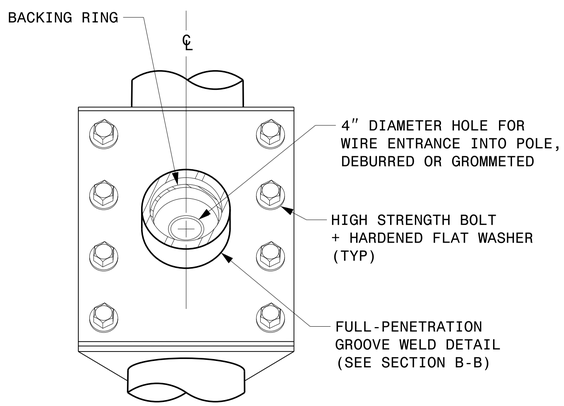

FRONT ELEVATION VIEW

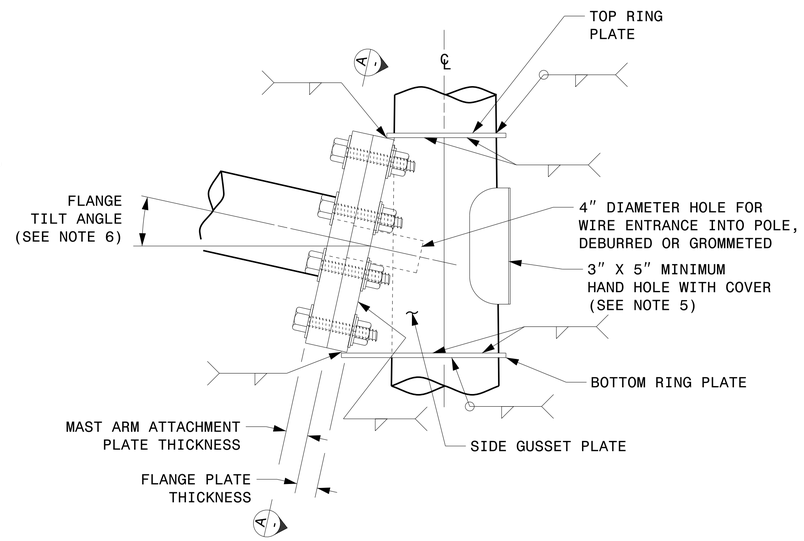

SIDE ELEVATION VIEW

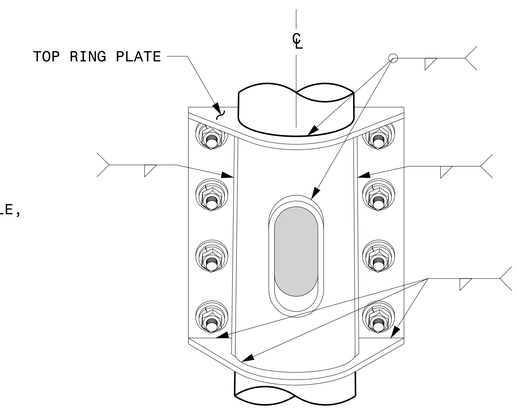

BACK ELEVATION VIEW

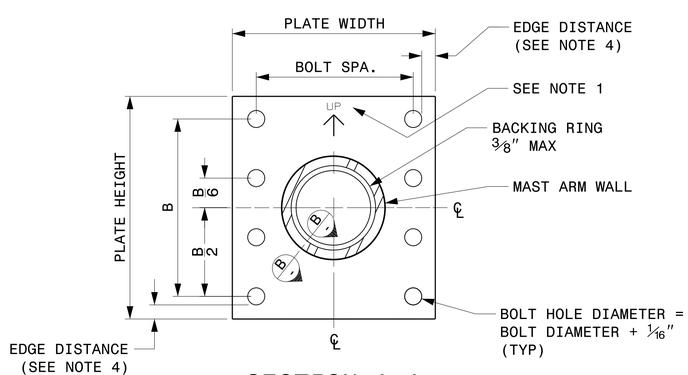

SECTION A-A
MAST ARM ATTACHMENT PLATE

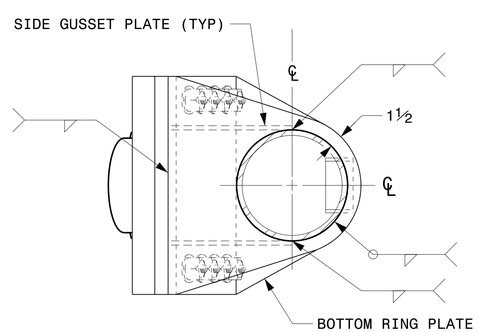

BOTTOM VIEW

Fabrication Details – Mast Arm Connection

Prepared in the Offices of:
Transportation Mobility and Safety Division
Signal Design Section
750 N.Greenfield Pkwy,Garner,NC 27529

SCALE 0 NA
NONE

Typical Fabrication Details
For
Mast Arm Connection To Pole

PLAN DATE:	SEPTEMBER 2023	DESIGNED BY:	C.F. ANDREWS
PREPARED BY:	K.C. DURIGON	REVIEWED BY:	D.C. SARKAR

REVISIONS	INIT.	DATE

SEAL
NORTH CAROLINA PROFESSIONAL SEAL 036626 ENGINEER KEVIN C. DURIGON

DocuSigned by:
Kevin Durigon
4B23DC79B3784DA...
SIGNATURE
09/21/2023
DATE

03-OCT-2023 12:38
S:\HTS\SOLUTIONS\ITS\Signals\Signal Design Section\Structures\Drawings\2024 Metal Pole Std Drawings for LRFD\2024 Sig.M5 Std. Connection Fabrication Details-Mast Arm Poles.dgn
kcdurigon

PROJECT I.D. NO.	SHEET NO.
	Sig.M6

Fabrication Details – Strain Pole Attachments

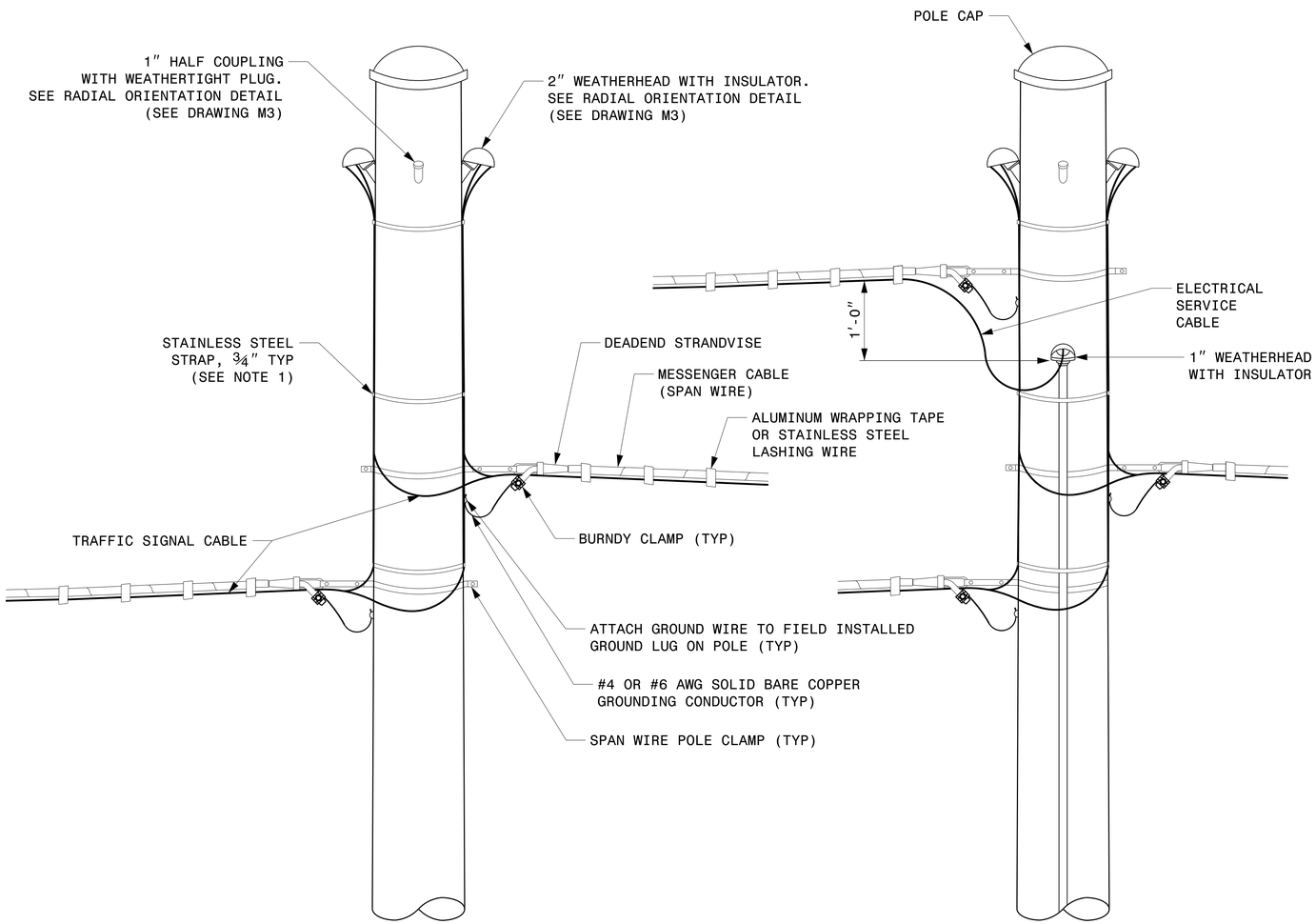

STRAIN POLE ATTACHMENTS

NOTES:

1. STRAP ALL SIGNAL CABLES TO THE SIDE OF THE POLE WITH ¾″ STAINLESS STEEL STRAPS WHEN THE DISTANCE BETWEEN SPAN WIRE ATTACHMENT CLAMP AND WEATHERHEADS EXCEEDS 3′-0″.
2. PROVIDE MINIMUM TWO SPAN WIRE POLE CLAMPS PER POLE.
3. IT IS PROHIBITED TO ATTACH TWO SPAN WIRES AT ONE POLE CLAMP.
4. FOR GENERAL REQUIREMENTS, REFER TO NCDOT STANDARD SPECIFICATIONS FOR ROADWAY AND STRUCTURES, JANUARY 2024.

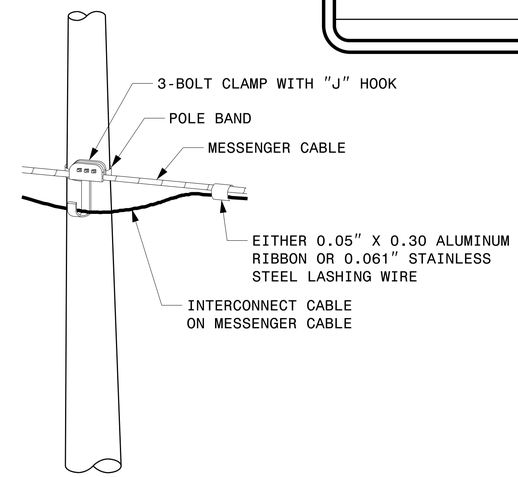

ATTACHMENT OF CABLE TO INTERMEDIATE METAL POLE

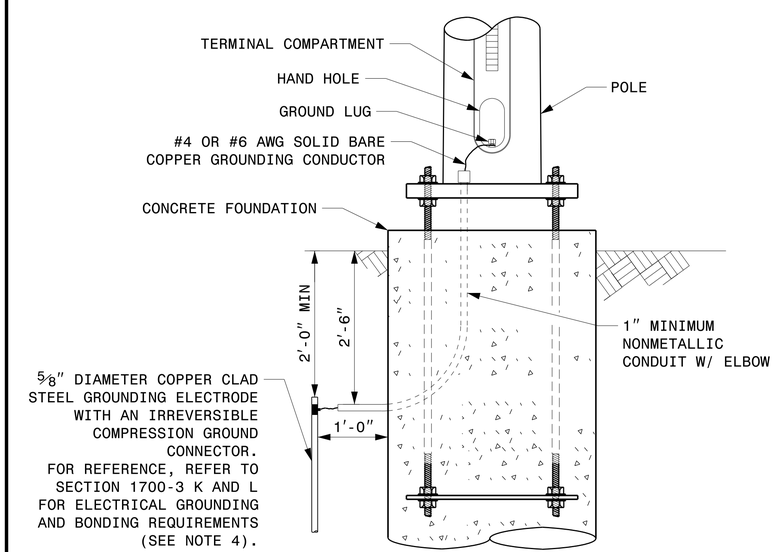

METAL POLE GROUNDING DETAIL FOR STRAIN POLE AND MAST ARM

Prepared in the Offices of:
Transportation Mobility and Safety Division
Signal Design Section
750 N.Greenfield Pkwy,Garner,NC 27529

SCALE
0 NA
NONE

Typical Fabrication Details
For
Strain Pole Attachments

PLAN DATE:	SEPTEMBER 2023	DESIGNED BY:	C.F. ANDREWS
PREPARED BY:	K.C. DURIGON	REVIEWED BY:	D.C. SARKAR

REVISIONS	INIT.	DATE

SEAL
NORTH CAROLINA PROFESSIONAL SEAL 036626 ENGINEER KEVIN C. DURIGON

DocuSigned by:
Kevin Durigon
SIGNATURE
4B23DC79B3784DA...
09/21/2023
DATE

03-OCT-2023 12:41
S:\TIMS\LIMITS\Signals\Signal Design Sections\Structures\Drawings\2024 Metal Pole Std Drawings for LRFD\2024 Sig.M6 Std. Fabrication Details-Strain Poles.dgn
kcdurigon

PROJECT I.D. NO.	SHEET NO.
	Sig.M7

Construction Details – Foundations

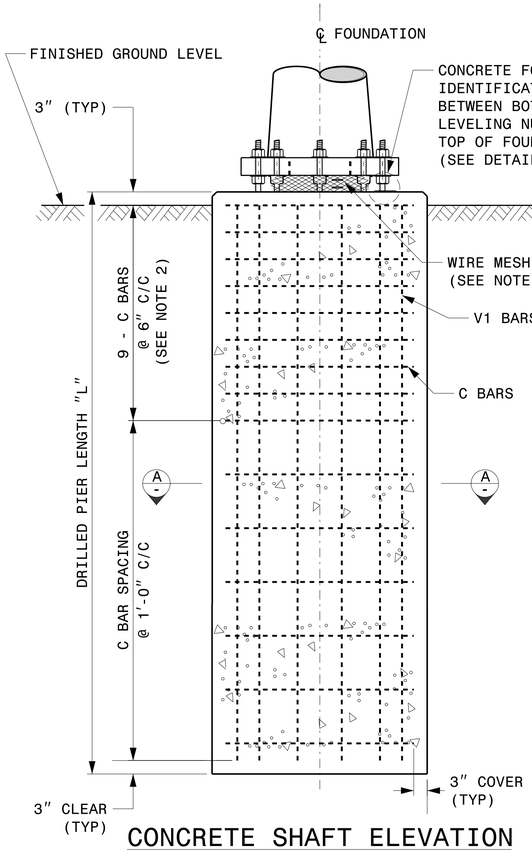

CONCRETE SHAFT ELEVATION

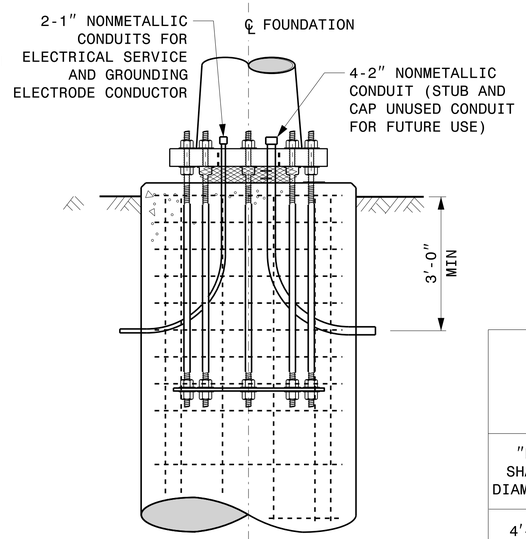

TYPICAL FOUNDATION CONDUIT DETAILS

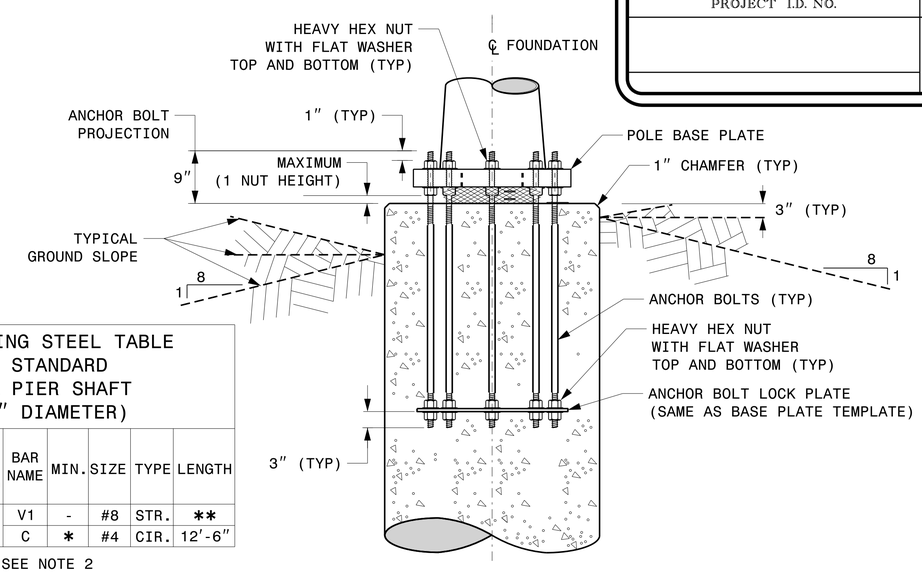

TYPICAL FOUNDATION ANCHOR BOLT DETAILS

(REINFORCING CAGE NOT SHOWN FOR CLARITY)

REINFORCING STEEL TABLE FOR STANDARD DRILL PIER SHAFT (4′-0″ DIAMETER)

"D" SHAFT DIAMETER	CONCRETE VOLUME (CU. YDS)	BAR NAME	MIN.	SIZE	TYPE	LENGTH
4′-0″	.465 X L	V1	-	#8	STR.	**
		C	*	#4	CIR.	12′-6″

* SEE NOTE 2
** SEE NOTE 3

GENERAL NOTES:

1. IF ACTUAL SUBSURFACE CONDITIONS DIFFER SIGNIFICANTLY FROM BORING DATA, CONTACT THE ENGINEER BEFORE EXCAVATING OR PLACING CONCRETE.
2. CIRCULAR TIE REINFORCING RINGS MAY BE VERTICALLY ADJUSTED BY +/-3″ AT A DEPTH BETWEEN 2′-0″ AND 3′-0″ TO FACILITATE THE INSTALLATION OF ELECTRICAL CONDUIT ENTERING IN THE CAGE.
3. FOR STANDARD FOUNDATIONS, SEE SHEET SIG. M8 FOR DETAILS. VERTICAL REINFORCING BARS (V1) MAY BE HORIZONTALLY ADJUSTED BY +/-3″ TO FACILITATE THE INSTALLATION OF ELECTRICAL CONDUIT ENTERING INTO THE CAGE.
4. PROVIDE 2″ TO 5″ FOUNDATION PROJECTION ABOVE GROUND LEVEL, DEPENDING ON THE GROUND SLOPE.
5. UNLESS OTHERWISE SHOWN, FOUNDATION DESIGNS ARE BASED ON NON-SLOPING LEVEL GROUND SURFACES WITH SLOPE RATIOS OF 8:1 (H:V) OR FLATTER. IF ACTUAL GROUND LINE SLOPES ARE STEEPER, CONTACT THE ENGINEER BEFORE EXCAVATING OR PLACING CONCRETE.
6. CONSTRUCT FOUNDATIONS IN ACCORDANCE WITH NCDOT STANDARD PROVISIONS SP09 R005- FOUNDATIONS AND ANCHOR ROD ASSEMBLIES FOR METAL POLES. ALL APPLICABLE 2024 NCDOT STANDARD SPECIFICATIONS ARE REFERENCED IN THIS PROVISION. REFER TO THE NCDOT RESOURCES/SPECIFICATIONS PAGE LOCATED ON THE CONNECT NCDOT WEBSITE.

   https://connect.ncdot.gov/resources/Specifications and Special Provisions.aspx
7. USE AIR ENTRAINED AA CONCRETE MIX WITH A COMPRESSION STRENGTH OF f′c=4500 psi (MIN) AFTER 28 DAYS.
8. USE ASTM A615 GRADE 60 DEFORMED BARS FOR ALL REINFORCING STEEL. MAINTAIN AT LEAST 3″ COVER ON ALL REINFORCEMENT.
9. LOCATE IDENTIFICATION TAG ON TOP OF THE FOUNDATION, DIRECTLY ABOVE THE CONDUIT'S ENTRY POINT.
10. PROVIDE TWO LAYERS OF 4 MESH GALVANIZED WELDED 23 GAUGE (0.025) 6″ WIDE AROUND PIPES UNDER THE BASE PLATE AND SECURE IT WITH TIES IF NECESSARY.
11. PREFERRED LOCATION FOR THE I.D. TAG IS AS SHOWN IN DETAIL-A: DIRECTLY ABOVE THE CONDUIT ENTERING THE FOUNDATION.

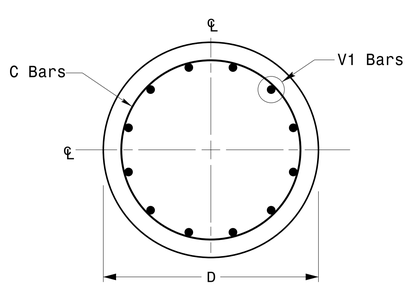

SECTION A-A

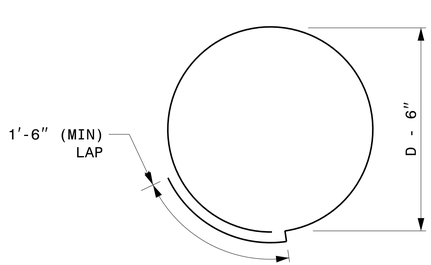

TYPICAL "C" BAR DETAIL

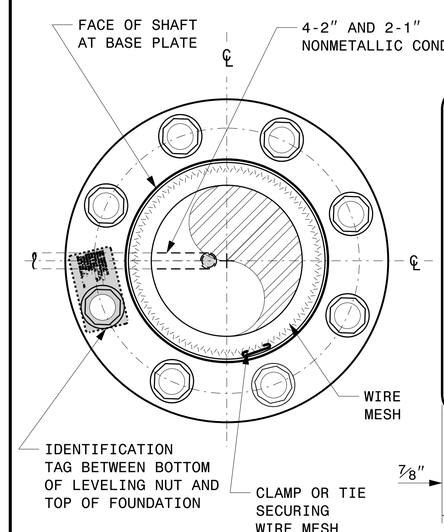

D = DIAMETER
L = LENGTH / DEPTH
mm = MONTH
yy = YEAR

DETAIL-A

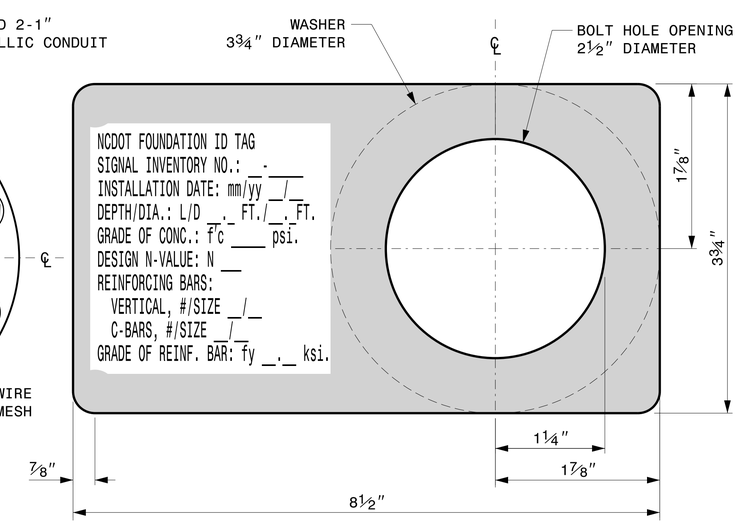

CONCRETE FOUNDATION IDENTIFICATION TAG DETAILS

Prepared in the Offices of:
Transportation Mobility and Safety Division
Signal Design Section
750 N.Greenfield Pkwy,Garner,NC 27529

SCALE
0 NA
NONE

Construction Details For Foundations

PLAN DATE: SEPTEMBER 2023	DESIGNED BY: K.C. DURIGON
PREPARED BY: K.C. DURIGON	REVIEWED BY: D.C. SARKAR

REVISIONS	INIT.	DATE

SEAL
NORTH CAROLINA PROFESSIONAL SEAL 036626 ENGINEER KEVIN C. DURIGON

DocuSigned by:
Kevin Durigon
SIGNATURE
4B23DC79B3784DA...
09/21/2023
DATE

03-OCT-2023 12:45
S:\TSSGU\413\Signals\Signal Design Section\Structures\Drawings\2024 Metal Pole Std Drawings for LRFD\2024 Sig.M7 Std. Construction Details-Strain Poles.dgn
kcdurigon

PROJECT I.D. NO.	SHEET NO.
	Sig.M8

SOIL CONDITION

STANDARD STRAIN POLES						STANDARD FOUNDATIONS 48″ Diameter Drilled Pier Length (L) – Feet							Reinforcement			
			Reactions at the Pole Base			Clay				Sand			Longitudinal		Stirrups	
Case No.	Pole Height (Ft.)	Base Plate BC (In.)	Axial (kip)	Shear (kip)	Moment (ft–kip)	Medium N–Value 4–8	Stiff N–Value 9–15	Very Stiff N–Value 16–30	Hard N–Value >30	Loose N–Value 4–10	Medium N–Value 11–30	Dense N–Value >30	Bar Size (#)	Quantity (ea.)	Bar Size (#)	Spacing (in.)
S26L1	26	22	2	9	210	19.5	12.5	9	6.5	15.5	14.5	13	8	12	4	12
S26L2	26	23	2	10	240	19.5	12	9	6.5	15.5	14.5	13	8	12	4	12
S26L3	26	25	2	11	260	20.5	12	10	8	16	15	13	8	12	4	12
S30L1	30	22	2	9	230	19	11	9	7	15.5	14	12.5	8	12	4	12
S30L2	30	23	2	10	270	20	12	10	8	16	14.5	13	8	12	4	12
S30L3	30	25	2	11	290	21	12	10	8	17	15	13.5	8	12	4	12
S30H1	30	25	3	13	355	23	13	11	9	18	16.5	14.5	8	12	4	12
S30H2	30	29	3	15	405	25	14	11	9	19	17.5	15.5	8	14	4	12
S30H3	30	29	3	16	430	26	15	12	9	20	18	16	8	14	4	6
S35L1	35	22	3	8	260	19.5	12	10	8	15.5	14.5	13	8	12	4	12
S35L2	35	23	3	10	300	21	12	10	8	16.5	15	13.5	8	12	4	12
S35L3	35	25	3	10	320	21.5	13	10	8	17	15.5	14	8	12	4	12
S35H1	35	25	3	12	390	23.5	14	11	9	18	17	15	8	14	4	12
S35H2	35	29	4	14	460	26	15	12	9	20	18	16	8	14	4	6
S35H3	35	29	4	16	495	28.5	15	13.5	10	21.5	19	17	8	14	4	6

48″ DIAMETER FOUNDATION CONCRETE VOLUME (CUBIC YARDS) = (0.465) x DRILLED PIER LENGTH

GENERAL NOTES:

1. VALUES SHOWN IN THE "REACTIONS AT THE POLE BASE" COLUMN REPRESENT THE MINIMUM ACCEPTABLE CAPACITY ALLOWED FOR DESIGN USING A COMBINED FORCE RATIO (CFR) OF 1.00.
2. USE CHAIRS AND SPACERS TO MAINTAIN PROPER CLEARANCE.
3. FOR FOUNDATION, ALWAYS USE AIR-ENTRAINED CONCRETE MIX.

FOUNDATION SELECTION:

1. PERFORM A STANDARD PENETRATION TEST AT EACH PROPOSED FOUNDATION SITE TO DETERMINE "N" VALUE.
2. SELECT THE APPROPRIATE WIND ZONE FROM M1 DRAWING.
3. SELECT THE SOIL TYPE (CLAY OR SAND) THAT BEST DESCRIBES THE SOIL CHARACTERISTICS.
4. GET THE APPROPRIATE STANDARD POLE CASE NUMBER FROM THE PLANS OR FROM THE ENGINEER.
5. SELECT THE APPROPRIATE COLUMN UNDER "STANDARD FOUNDATIONS" BASED ON SOIL TYPE AND "N" VALUE. SELECT THE APPROPRIATE ROW BASED ON THE POLE LOAD CASE.
6. THE FOUNDATION DEPTH IS THE VALUE SHOWN IN THE "STANDARD FOUNDATIONS" CATEGORY WHERE THE COLUMN AND THE ROW INTERSECT.
7. USE CONSTRUCTION PROCEDURES AND DESIGN METHODS PRESCRIBED BY FHWA-NHI-10-016 MANUAL FOR DRILLED SHAFTS.

Standard Strain Pole Foundation – All Soil Conditions

Prepared in the Offices of:
Transportation Mobility and Safety Division
Signal Design Section
750 N.Greenfield Pkwy,Garner,NC 27529

SCALE 0 NA
NONE

Standard Strain Pole Foundation for All Soil Conditions

PLAN DATE:	SEPTEMBER 2023	DESIGNED BY:	K.C. DURIGON
PREPARED BY:	K.C. DURIGON	REVIEWED BY:	D.C. SARKAR

REVISIONS	INIT.	DATE

SEAL
NORTH CAROLINA PROFESSIONAL SEAL 036626 ENGINEER KEVIN C. DURIGON

DocuSigned by:
Kevin Durigon
SIGNATURE
4B23DC79B3784DA...
09/21/2023
DATE

03-OCT-2023 12:48
S:*ITS*Signals*Signal Design Section*Structures*Drawings*2024 Metal Pole Std Drawings for LRFD*2024 Sig.M8 Std. Strain Pole Found.-Saturated Soil Condition.dgn
kcdurigon

PROJECT I.D. NO.	SHEET NO.
	Sig.M9

Fabrication Details – CCTV Camera Poles

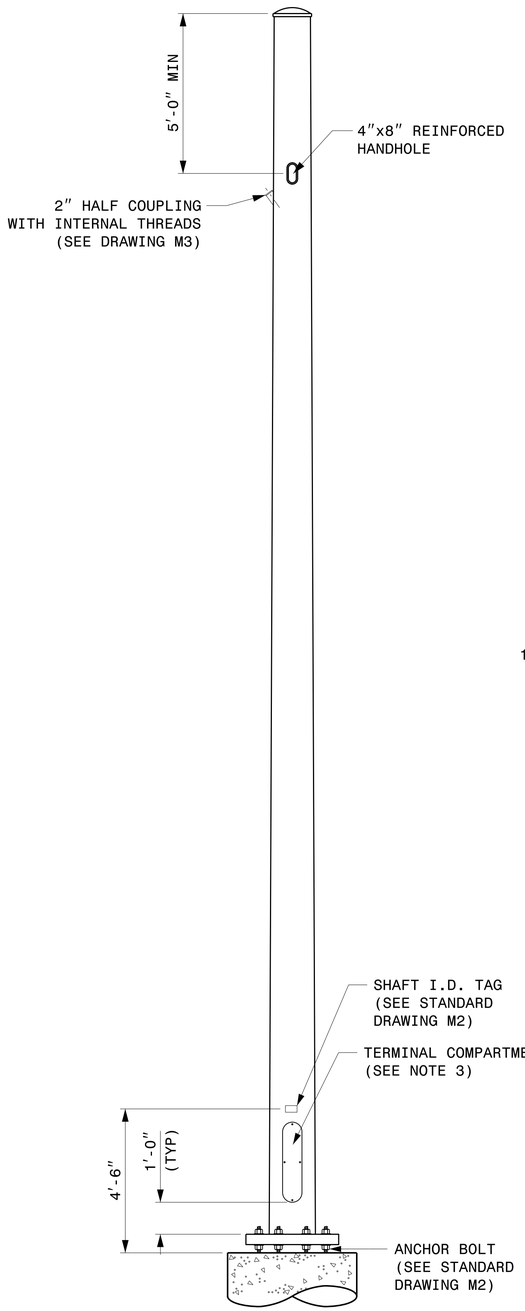

CCTV CAMERA POLE

(NOT TO SCALE)

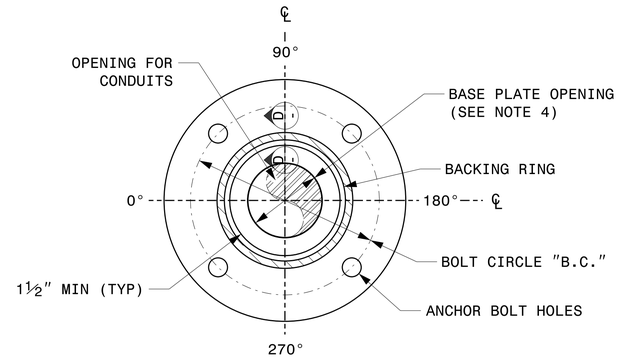

4 BOLT PATTERN
FOR POLES UP TO 40'

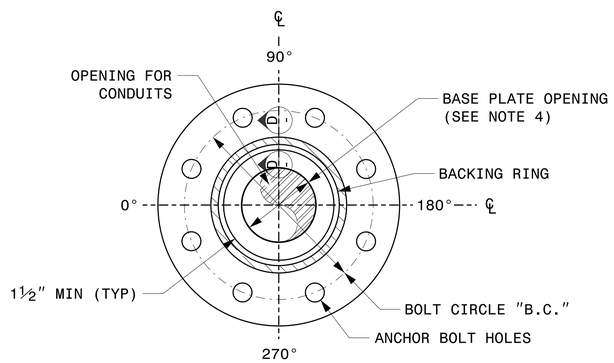

8 BOLT PATTERN
FOR POLES TALLER THAN 40'

BASE PLATE DETAILS

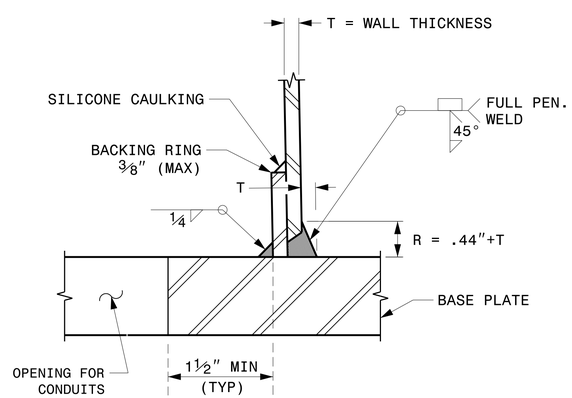

SECTION D-D

(POLE ATTACHMENT TO BASE PLATE)

FULL-PENETRATION GROOVE WELD DETAIL

NOTES:

1. THIS DRAWING PROVIDES BASIC DETAILS FOR CCTV POLES. PROJECT REQUIREMENTS MAY REQUIRE SPECIAL FACTORY PREPS THAT ARE NOT SHOWN ON THESE DETAILS.
2. DETAILS FOR INTERNAL CAMERA LOWERING SYSTEMS ARE NOT SHOWN.
3. POLE MOUNTED CABINETS MAY REQUIRE MODIFICATIONS TO THE LOWER HANDHOLE OPENING TO MOUNT CABINETS. 4" X 8" REINFORCED HANDHOLES ARE ACCEPTABLE OPTIONS, AND MAY BE PREFERRED.
4. OPENING IN POLE BASE SHALL BE EQUAL TO POLE BASE INSIDE DIAMETER MINUS 3½" BUT SHALL NOT BE LESS THAN 8½".
5. USE COMPACT SECTION CRITERIA D/T RATIO PER AASHTO LTS-LRFD 1ST EDITION SECTION 5.7.2.

Prepared in the Offices of:
Transportation Mobility and Safety Division
Signal Design Section
750 N.Greenfield Pkwy,Garner,NC 27529

SCALE 0 NA
NONE

Typical Fabrication Details
For
CCTV Poles

PLAN DATE:	SEPTEMBER 2023	DESIGNED BY:	K.C. DURIGON
PREPARED BY:	K.C. DURIGON	REVIEWED BY:	C.F. ANDREWS

REVISIONS	INIT.	DATE

SEAL
NORTH CAROLINA PROFESSIONAL SEAL 036626 ENGINEER KEVIN C. DURIGON

DocuSigned by:
Kevin Durigon
SIGNATURE
4B23DC79B3784DA...
09/21/2023
DATE

03-OCT-2023 12:51
S:*Utilities\ITS\Signals*Signal Design Section*Structures*Drawings*2024 Metal Pole Std Drawings for LRFD*2024 Sig.M9 Fabrication Details - CCTV Poles.dgn
kcdurigon