Docusign Envelope ID: 996831A4-A229-401E-B3E7-9B9D35189B2

PROJECT REFERENCE NO.	SHEET NO.
U-5798B	Sig. 3.2

MAXTIME OVERLAP PROGRAMMING DETAIL FOR DEFAULT PHASING

Front Panel
Main Menu >Controller >Overlap >Overlap Parameters/Overlap Timings

Web Interface
Home >Controller >Overlap Configuration >Overlaps

Overlap Plan 1

Overlap	1	2	3	4	5	6
Type	FYA 4 - Section	FYA 4 - Section	Normal	FYA 4 - Section	FYA 4 - Section	FYA 4 - Section
Included Phases	8	4	1	8	6, 7	2, 3
Modifier Phases	1	3	-	7	-	-
Modifier Overlaps	-	-	-	-	-	-
Trail Green	0	0	0	0	0	0
Trail Yellow	0.0	0.0	0.0	0.0	0.0	0.0
Trail Red	0.0	0.0	0.0	0.0	0.0	0.0

MAXTIME OVERLAP PROGRAMMING DETAIL FOR ALTERNATE PHASING

Front Panel
Main Menu >Controller >Overlap >Overlap Parameters/Overlap Timings

Web Interface
Home >Controller >Overlap Configuration >Overlaps

In the table view of the web interface, right click on "Overlap" in the top left corner of the table. Copy the entire contents of Overlap Plan 1. Paste Overlap Plan 1 into Overlap Plan 2. Modify Overlap Plan 2 as shown below and save changes.

Overlap Plan 2

Overlap	1	2	3	4	5	6
Type	FYA 4 - Section	FYA 4 - Section	Normal	FYA 4 - Section	FYA 4 - Section	FYA 4 - Section
Included Phases	8	-	1	-	6, 7	2, 3
Modifier Phases	1	3	-	7	-	-
Modifier Overlaps	-	-	-	-	-	-
Trail Green	0	0	0	0	0	0
Trail Yellow	0.0	0.0	0.0	0.0	0.0	0.0
Trail Red	0.0	0.0	0.0	0.0	0.0	0.0

NOTICE INCLUDED PHASE

FYA SIGNAL WIRING DETAIL

(wire signal heads as shown)

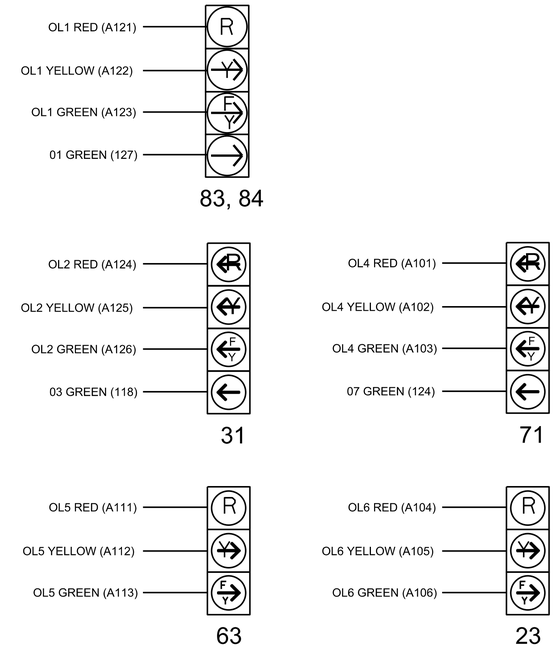

MAXTIME STARTUP AND SOFTWARE FLASH PROGRAMMING DETAIL

Front Panel
Main Menu >Controller >Unit

Web Interface
Home >Controller >Unit

Modify parameters as shown below and save changes.

Start Up Parameters

StartUp Clearance Hold
6

Unit Flash Parameters

All Red Flash Exit Time
6

THIS ELECTRICAL DETAIL IS FOR
THE SIGNAL DESIGN: 06-1131T2
DESIGNED: June 2025
SEALED: 6/12/2025
REVISED: _____

RS&H
NC FIRM LICENSE No: F-0493
8521 SIX FORKS ROAD, SUITE 400
RALEIGH, NC 27615
(919) 926-4100

Signal Upgrade - Temporary Signal 2
Electrical Detail - Sheet 2 of 3

DOCUMENT NOT CONSIDERED FINAL UNLESS ALL SIGNATURES COMPLETED

ELECTRICAL AND PROGRAMMING DETAILS FOR:

Prepared for the Offices of:
Transportation Mobility and Safety Division
STATE OF NORTH CAROLINA
DEPARTMENT OF TRANSPORTATION
Signals Management Section
750 N.Greenfield Pkwy,Garner,NC 27529

SR 1102 (Gillis Hill Road)
at
SR 1112 (Stoney Point Road)

Division 6 Cumberland County Fayetteville

PLAN DATE:	June 2025	REVIEWED BY:	O. Drobny
PREPARED BY:	S.G. Haynie	REVIEWED BY:	_____

REVISIONS	INIT.	DATE

SEAL
NORTH CAROLINA PROFESSIONAL SEAL 029531 ENGINEER STEVEN G. HAYNIE

DocuSigned by: Steven G. Haynie 6/12/2025
DESIGNER SIGNATURE DATE

SIG. INVENTORY NO. 06-1131T2

$$$$$$$$SCTLNG$$$$$
$$$$$$$$SSLNG$$$$$
$$$$$$$$SSDON$$$$$
$$$$$$$$USERNAME$$$$