Docusign Envelope ID: 7ADC4507-52B2-45A0-B0CD-8199987109CDE

PROJECT REFERENCE NO.	SHEET NO.
U-4758	Sig. 18.1

18 CHANNEL IP CONFLICT MONITOR PROGRAMMING DETAIL

(remove jumpers and set switches as shown)

REMOVE DIODE JUMPERS 1-5, 1-6, 1-9, 1-11, 1-17, 2-5, 2-6, 2-9, 2-11, 2-17, 2-18, 4-8, 4-10, 4-12, 5-9, 5-11, 5-18, 6-9, 6-11, 6-17, 6-18, 8-10, 8-12, 9-11, 9-17, 9-18, 10-12, 11-17, 11-18, and 17-18.

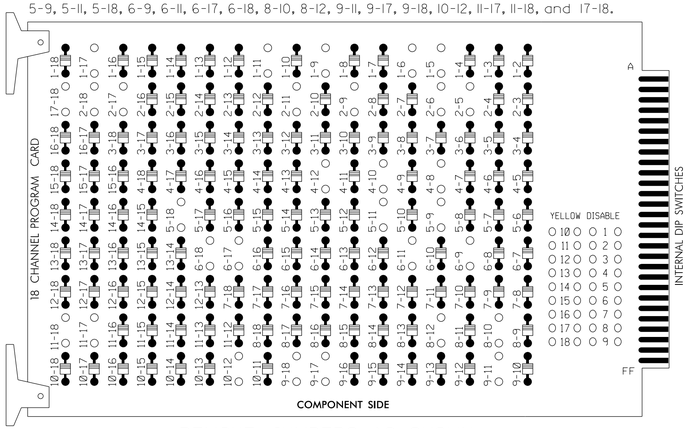

REMOVE JUMPERS AS SHOWN

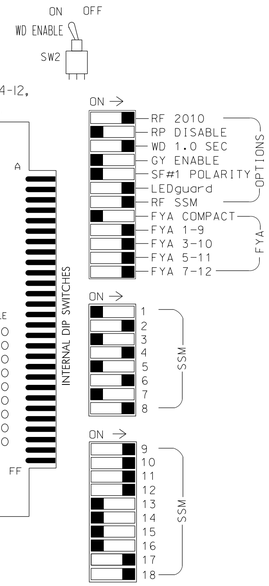

NOTES:

1. Card is provided with all diode jumpers in place. Removal of any jumper allows its channels to run concurrently.
2. Ensure jumpers SEL2-SEL5 and SEL9 are present on the monitor board.
3. Ensure that Red Enable is active at all times during normal operation.
4. Integrate monitor with Ethernet network in cabinet.

NOTES

1. To prevent "flash-conflict" problems, insert red flash program blocks for all vehicle load switches in the output file. The installer shall verify that signal heads flash in accordance with the Signal Plans.
2. Program phases 4 and 8 for Dual Entry.
3. Program controller to start up in phase 2 Green and 6 Green.
4. If this signal will be managed by an ATMS software, enable controller and detector logging for all detectors used at this location.

EQUIPMENT INFORMATION

CONTROLLER.....2070LX
CABINET.....332 W/ AUX
SOFTWARE.....ECONOLITE ASC/3-2070
CABINET MOUNT.....BASE
OUTPUT FILE POSITIONS...18 WITH AUX. OUTPUT FILE
LOAD SWITCHES USED.....S1,S2,S5,S7,S8,S11,AUX S1, AUX S2,AUX S3,AUX S4,AUX S5,AUX S6
PHASES USED.....1,2,4,5,6,8
OVERLAP "A".....*
OVERLAP "B".....*
OVERLAP "C".....*
OVERLAP "D".....*
OVERLAP "E".....*
OVERLAP "F".....*

* See overlap programming detail on sheet 2

SIGNAL HEAD HOOK-UP CHART

LOAD SWITCH NO.	S1	S2	S3	S4	S5	S6	S7	S8	S9	S10	S11	S12	AUX S1	AUX S2	AUX S3	AUX S4	AUX S5	AUX S6
CMU CHANNEL NO.	1	2	13	3	4	14	5	6	15	7	8	16	9	10	17	11	12	18
PHASE	1	2	2 PED	3	4	4 PED	5	6	6 PED	7	8	8 PED	OLA	OLB	OLE	OLC	OLD	OLF
SIGNAL HEAD NO.	11★	21,22	NU	NU	42 43,44	NU	51★	61,62	NU	NU	82, 83,84	NU	11★	81★	63★	51★	41★	23★
RED		128			101			134			107				A111			A104
YELLOW	*	129			102		*	135			108							
GREEN		130			103			136			109							
RED ARROW													A121	A124		A114	A101	
YELLOW ARROW													A122	A125	A112	A115	A102	A105
FLASHING YELLOW ARROW													A123	A126	A113	A116	A103	A106
GREEN ARROW	127						133											

NU = Not Used

* Denotes install load resistor. See load resistor installation detail this sheet.

★ See pictorial of head wiring in detail below.

FYA SIGNAL WIRING DETAIL

(wire signal heads as shown)

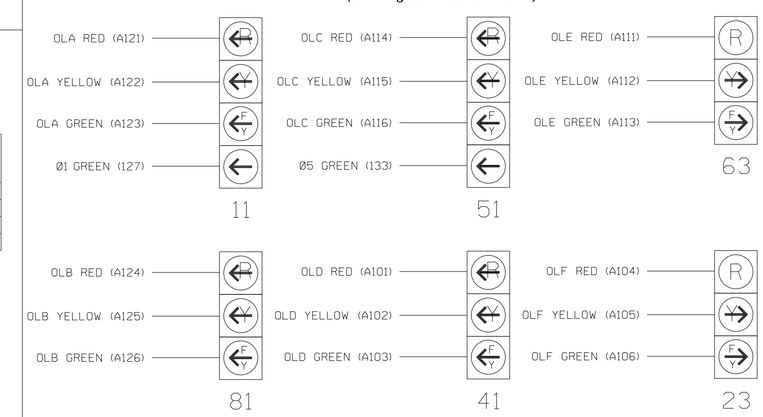

INPUT FILE POSITION LAYOUT

(front view)

		1	2	3	4	5	6	7	8	9	10	11	12	13	14
FILE "I"	U	Ø 1 1A	SLOT EMPTY	SLOT EMPTY	WIRED INPUT ⊗	SLOT EMPTY	SLOT EMPTY	SLOT EMPTY	SLOT EMPTY	SLOT EMPTY	SLOT EMPTY	SLOT EMPTY	SLOT EMPTY	SLOT EMPTY	FS DC ISOLATOR
	L	NOT USED													ST DC ISOLATOR
FILE "J"	U	Ø 5 5A	SLOT EMPTY	SLOT EMPTY	WIRED INPUT ⊗	SLOT EMPTY	SLOT EMPTY	SLOT EMPTY	SLOT EMPTY	SLOT EMPTY	SLOT EMPTY	SLOT EMPTY	SLOT EMPTY	SLOT EMPTY	SLOT EMPTY
	L	NOT USED													

EX.: 1A, 2A, ETC. = LOOP NO.'S

FS = FLASH SENSE
ST = STOP TIME

INPUT FILE CONNECTION & PROGRAMMING CHART

LOOP NO.	LOOP TERMINAL	INPUT FILE POS.	PIN NO.	DETECTOR NO.	NEMA PHASE	CALL	EXTEND TIME	DELAY TIME	ADDED INITIAL	DETECTOR TYPE
1A [1]	TB2-1,2	I1U	56	1★	1	YES		15.0		N
	-	J4U	48	26★	6	YES		3.0		G
5A [2]	TB3-1,2	J1U	55	5★	5	YES		15.0		N
	-	I4U	47	22★	2	YES		3.0		G

[1] Add jumper from I1-W to J4-W, on rear of input file.

[2] Add jumper from J1-W to I4-W, on rear of input file.

★ For the detectors to work as shown on the signal design plan. See the Vehicle Detector Setup Programming Detail for Alternate Phasing on sheet 2.

INPUT FILE POSITION LEGEND: J2L
FILE J
SLOT 2
LOWER

LOAD RESISTOR INSTALLATION DETAIL

(install resistors as shown below)

ACCEPTABLE VALUES

VALUE (ohms)	WATTAGE
1.5K - 1.9K	25W (min)
2.0K - 3.0K	10W (min)

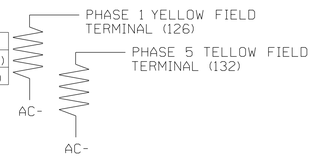

SPECIAL DETECTOR NOTE

1) Install a non-intrusive detection system for vehicle detection. Perform installation according to manufacturer's directions and NCDOT engineer-approved mounting locations to accomplish the detection schemes shown on the Signal Design Plans.

2) For detection areas 1A and 5A detector card placement and slots reserved for wired inputs are typical for a NCDOT installation. Inputs associated with these slots are compatible with time of day instructions located on sheets 2 and 3 of this electrical detail.

THIS ELECTRICAL DETAIL IS FOR
THE SIGNAL DESIGN: 07-1115T3
DESIGNED: January 2025
SEALED: 03-14-2025
REVISED: N/A

Electrical Detail - Sheet 1 of 4
Temporary Design 3

DOCUMENT NOT CONSIDERED FINAL UNLESS ALL SIGNATURES COMPLETED

ELECTRICAL AND PROGRAMMING DETAILS FOR:

SR 1850 (Sandy Ridge Road)
at
SR 1556 (Gallimore Dairy Road)

Division 7 Guilford County High Point

PLAN DATE: January 2025 REVIEWED BY: AM Encarnacion
PREPARED BY: JT Stiff REVIEWED BY: PL Alexander

REVISIONS	INIT.	DATE

Prepared for the Offices of:
Transportation Mobility and Safety Division
STATE OF NORTH CAROLINA DEPARTMENT OF TRANSPORTATION
ITS & Signals Management Section
750 N.Greenfield Pkwy,Garner,NC 27529

SEAL
NORTH CAROLINA PROFESSIONAL SEAL 044476 ENGINEER ANTHONY M. ENCARNACION

DocuSigned by: Anthony Encarnacion
DECCF0F0F0BC4F0...
SIGNATURE 3/14/2025 DATE

SIG. INVENTORY NO. 07-1115T3

AtkinsRéalis
1616 EAST MILLBROOK ROAD, SUITE 160
RALEIGH, NORTH CAROLINA 27609
(919) 876-6888 NCBEES #F-0326

13-MAR-2025 17:06
pw://SUS003643.wsatkins.com:ATKNANC01/Documents/Roads and Bridges/Projects/100059632 JSSR Sig and ITS/Task 05_11_Signals/07111513_sm_ele.2023mcdd.dgn
STIFF4685 AT LU5491089