Docusign Envelope ID: 7ADC4507-52B2-45A0-B0CD-819998710CDE

PROJECT REFERENCE NO.	SHEET NO.
U-4758	Sig. 4.1

18 CHANNEL IP CONFLICT MONITOR PROGRAMMING DETAIL

(remove jumpers and set switches as shown)

REMOVE DIODE JUMPERS 1-5, 1-6, 1-9, 1-11, 2-5, 2-6, 2-9, 2-11, 2-13, 4-8, 4-10, 4-12, 4-14, 5-9, 5-11, 5-13, 6-9, 6-11, 6-13, 8-10, 8-12, 8-14, 9-11, 9-13, 10-12, 10-14, 11-13 and 12-14.

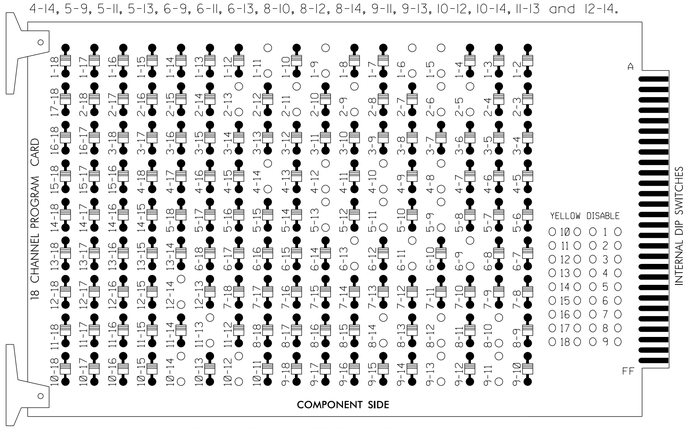

REMOVE JUMPERS AS SHOWN

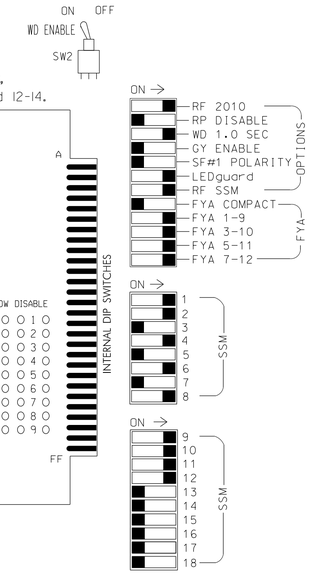

■ = DENOTES POSITION OF SWITCH

NOTES:

1. Card is provided with all diode jumpers in place. Removal of any jumper allows its channels to run concurrently.
2. Ensure jumpers SEL2-SEL5 and SEL9 are present on the monitor board.
3. Ensure that Red Enable is active at all times during normal operation.
4. Integrate monitor with Ethernet network in cabinet.

NOTES

1. To prevent "flash-conflict" problems, insert red flash program blocks for all vehicle load switches in the output file. The installer shall verify that signal heads flash in accordance with the Signal Plans.
2. Program phases 4 and 8 for Dual Entry.
3. Program controller to start up in phase 2 Green and 6 Green.
4. The cabinet and controller are part of the High Point Signal System.

EQUIPMENT INFORMATION

CONTROLLER.....2070LX
CABINET.....332 W/ AUX
SOFTWARE.....ECONOLITE ASC/3-2070
CABINET MOUNT.....BASE
OUTPUT FILE POSITIONS...18 WITH AUX. OUTPUT FILE
LOAD SWITCHES USED.....S1,S2,S3,S5,S6,S7,S8,S11, AUX S1,AUX S2,AUX S4,AUX S5
PHASES USED.....1,2,2 PED,4,4 PED,5,6,8
OVERLAP "A".....*
OVERLAP "B".....*
OVERLAP "C".....*
OVERLAP "D".....*

* See overlap programming detail on sheet 2

SIGNAL HEAD HOOK-UP CHART

LOAD SWITCH NO.	S1		S2	S3	S4	S5	S6	S7	S8	S9	S10	S11	S12	AUX S1	AUX S2	AUX S3	AUX S4	AUX S5	AUX S6
CMU CHANNEL NO.	1		2	13	3	4	14	5	6	15	7	8	16	9	10	17	11	12	18
PHASE	1		2	2 PED	3	4	4 PED	5	6	6 PED	7	8	8 PED	OLA	OLB	SPARE	OLC	OLD	SPARE
SIGNAL HEAD NO.	11★	83	21,22	P21, P22	NU	42 43,44	P41, P42	51★	61,62	NU	NU	82, 83,84	NU	11★	81★	NU	51★	41★	NU
RED		*	128			101			134			107							
YELLOW			129			102		*	135			108							
GREEN			130			103			136			109							
RED ARROW														A121	A124		A114	A101	
YELLOW ARROW		126												A122	A125		A115	A102	
FLASHING YELLOW ARROW														A123	A126		A116	A103	
GREEN ARROW	127	127						133											
✋				113			104												
🚶				115			106												

NU = Not Used

* Denotes install load resistor. See load resistor installation detail this sheet.

★ See pictorial of head wiring in detail below.

FYA SIGNAL WIRING DETAIL

(wire signal heads as shown)

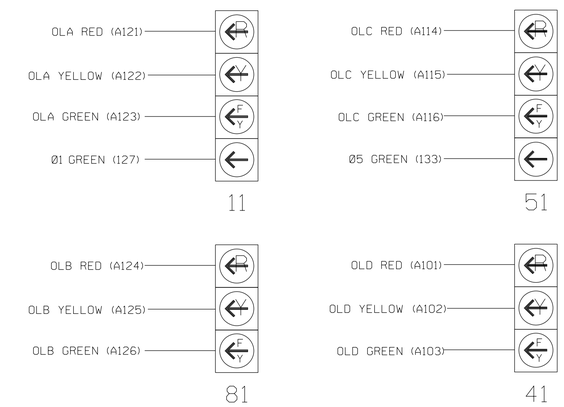

INPUT FILE POSITION LAYOUT

(front view)

		1	2	3	4	5	6	7	8	9	10	11	12	13	14
FILE "I"	U	Ø 1 1A	SLOT EMPTY	SLOT EMPTY	WIRED INPUT ⊗	SLOT EMPTY	SLOT EMPTY	SLOT EMPTY	SLOT EMPTY	SLOT EMPTY	SLOT EMPTY	SLOT EMPTY	Ø2 PED DC ISOLATOR	SLOT EMPTY	FS DC ISOLATOR
	L	NOT USED											Ø4 PED DC ISOLATOR		ST DC ISOLATOR
FILE "J"	U	Ø 5 5A	SLOT EMPTY	SLOT EMPTY	WIRED INPUT ⊗	SLOT EMPTY	SLOT EMPTY	SLOT EMPTY	SLOT EMPTY	SLOT EMPTY	SLOT EMPTY	SLOT EMPTY	SLOT EMPTY	SLOT EMPTY	SLOT EMPTY
	L	NOT USED													

EX.: 1A, 2A, ETC. = LOOP NO.'S

FS = FLASH SENSE
ST = STOP TIME

⊗ Wired Input - Do not populate slot with detector card

INPUT FILE CONNECTION & PROGRAMMING CHART

LOOP NO.	LOOP TERMINAL	INPUT FILE POS.	PIN NO.	DETECTOR NO.	NEMA PHASE	CALL	EXTEND TIME	DELAY TIME	ADDED INITIAL	DETECTOR TYPE
1A [1]	TB2-1,2	I1U	56	1★	1	YES		15.0		N
	-	J4U	48	26★	6	YES		3.0		G
5A [2]	TB3-1,2	J1U	55	5★	5	YES		15.0		N
	-	I4U	47	22★	2	YES		3.0		G
PED PUSH BUTTONS										
P21,P22	TB8-4,6	I12U	67	PED 2	2 PED					
P41,P42	TB8-5,6	I12L	69	PED 4	4 PED					

NOTE:
INSTALL DC ISOLATORS IN INPUT FILE SLOT I12.

[1] Add jumper from I1-W to J4-W, on rear of input file.
[2] Add jumper from J1-W to I4-W, on rear of input file.
★ For the detectors to work as shown on the signal design plan. See the Vehicle Detector Setup Programming Detail for Alternate Phasing on sheet 2.

INPUT FILE POSITION LEGEND: J2L
FILE J
SLOT 2
LOWER

LOAD RESISTOR INSTALLATION DETAIL

(install resistors as shown below)

ACCEPTABLE VALUES

VALUE (ohms)	WATTAGE
1.5K - 1.9K	25W (min)
2.0K - 3.0K	10W (min)

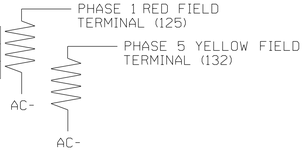

SPECIAL DETECTOR NOTE

1) Install a non-intrusive detection system for vehicle detection. Perform installation according to manufacturer's directions and NCDOT engineer-approved mounting locations to accomplish the detection schemes shown on the Signal Design Plans.

2) For detection areas 1A and 5A detector card placement and slots reserved for wired inputs are typical for a NCDOT installation. Inputs associated with these slots are compatible with time of day instructions located on sheets 2 and 3 of this electrical detail.

THIS ELECTRICAL DETAIL IS FOR
THE SIGNAL DESIGN: 07-0935T3
DESIGNED: January 2025
SEALED: 03-14-2025
REVISED: N/A

Electrical Detail - Sheet 1 of 4
Temporary Design 3

DOCUMENT NOT CONSIDERED FINAL UNLESS ALL SIGNATURES COMPLETED

ELECTRICAL AND PROGRAMMING DETAILS FOR:

SR 1820 (Skeet Club Road)
at
SR 1818 (Johnson Street)

Division 7 Guilford County High Point

PLAN DATE:	January 2025	REVIEWED BY:	AM Encarnacion
PREPARED BY:	JT Stiff	REVIEWED BY:	PL Alexander

REVISIONS	INIT.	DATE

Prepared for the Offices of:
Transportation Mobility and Safety Division
STATE OF NORTH CAROLINA DEPARTMENT OF TRANSPORTATION
ITS & Signals Management Section
750 N.Greenfield Pkwy,Garner,NC 27529

SEAL
NORTH CAROLINA PROFESSIONAL SEAL 044476 ENGINEER ANTHONY M. ENCARNACION

DocuSigned by: Anthony Encarnacion 3/14/2025
SIGNATURE DATE

SIG. INVENTORY NO. 07-0935T3

AtkinsRéalis
1616 EAST MILLBROOK ROAD, SUITE 160
RALEIGH, NORTH CAROLINA 27609
(919) 876-6888 NCBEES #F-0326

13-MAR-2025 15:09
pw://SUS003643.wsatkins.com:ATKNANC01/Documents/Roads and Bridges/Projects/100059632 JSSR Sig and ITS/Task 05_11_Signals/07093513_sm_ele.2022mmda.dgn
STIF4685 AT LU5491089