Docusign Envelope ID: EAF30178-04A7-49E9-A55E-0E62C6C9068E

8/17/99

REVISIONS

JMT Johnson, Mirmiran, & Thompson Inc.
4700 Falls of Neuse Rd. Suite 100,
Raleigh, NC. 27609
License No: C-3097

PROJECT REFERENCE NO.	SHEET NO.
I-5880	2A-2
R/W SHEET NO.	

ROADWAY DESIGN ENGINEER
NORTH CAROLINA PROFESSIONAL SEAL 046062 ENGINEER CHARLES J. YOUNG
6/11/2025

PAVEMENT DESIGN ENGINEER
NORTH CAROLINA PROFESSIONAL SEAL 024964 ENGINEER JOSEPH T. HOLLAND
6/11/2025

DOCUMENT NOT CONSIDERED FINAL UNLESS ALL SIGNATURES COMPLETED

PAVEMENT SCHEDULE

A1	11.5" PORT CONC W DOWEL
B1	0.75" UTBWC
C1	1.5" S9.5C
C2	3" S9.5C
C3	1.5" S9.5D
C4	3" S9.5D
C5	VAR. S9.5C
C6	VAR. S9.5D
D1	4" I19.0C
D2	VAR. I19.0C
E1	4" B25.0C
E2	5" B25.0C
E3	9" B25.0C
E4	VAR. B25.0C
J1	10" ABC
K1	8" CL IV SUB STAB
K2	12" CL IV SUB STAB
N1	GEOTEXT SUB STAB
R1	2'6" MODIFIED C&G
R2	2'6" C&G
R3	5" MONO CONC ISL KEY IN
R4	9" CON TRUCK APRON
R5	2' MOD VALLEY GUTTER
R6	SHOULDER BERM GUTTER
S	4" CONC SIDEWALK
T	EARTH MATERIAL
U	EXISTING PAVEMENT
V1	MILLING 1.5"
V2	MILLING 2.25"
V3	INCIDENTAL MILLING
W	WEDGING SEE DETAIL 2A-1
Y	RUMBLE STRIPS

NOTE: PAVEMENT EDGE SLOPES ARE 1:1 UNLESS SHOWN OTHERWISE.

SHOULDER DRAIN DETAILS

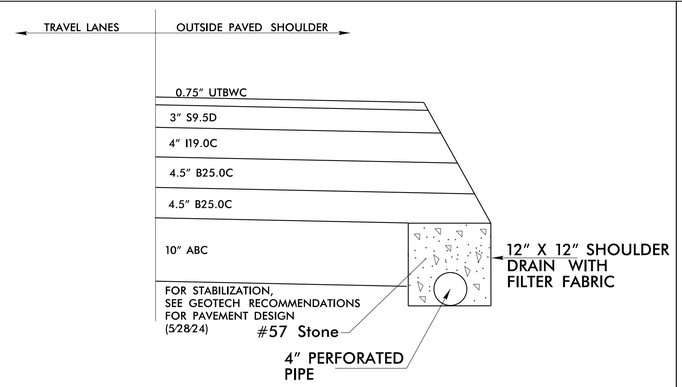

–L– STA. 41+05 TO 44+05 LEFT OUTSIDE SHOULDER OUTLETS AT 44+05 (PAD)
–L– STA. 40+50 TO 43+50 RIGHT OUTSIDE SHOULDER OUTLETS AT 43+50 (PAD)

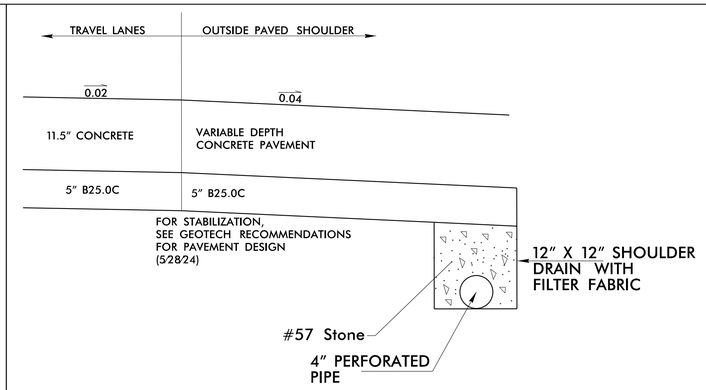

–L– STA. 31+90 TO 38+72 LEFT OUTSIDE SHOULDER OUTLETS AT 31+90 (PAD), 35+25 (PAD)
–L– STA. 30+75 TO 37+82 RIGHT OUTSIDE SHOULDER OUTLETS AT 30+75 (2GI #406), 34+00 (PAD)

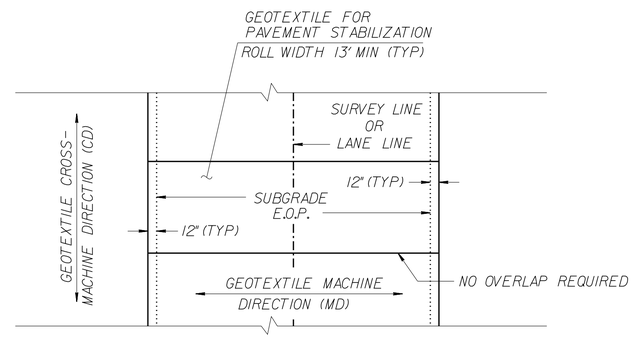

GEOTEXTILE FOR SUBGRADE STABILIZATION (PLAN VIEW)

(100% COVERAGE REQUIRED)

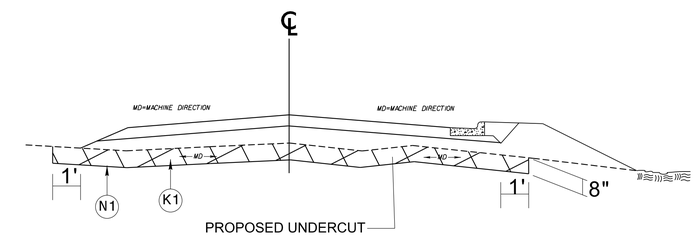

–L– STA. 36+75.00 TO STA. 37+75.00 LT
–L– STA. 37+75.00 TO STA. 38+46.00 LT & RT
–L– STA. 40+21.00 TO STA. 43+95.00 LT & RT
–L– STA. 45+00.00 TO STA. 46+50.00 LT
–L– STA. 46+50.00 TO STA. 48+25.00 LT & RT
–L– STA. 48+25.00 TO STA. 50+75.00 RT
–RPB– STA. 10+00.00 TO 16+75.00 LT & RT
–RPC– STA. 10+00.00 TO 21+00.00 LT & RT
–Y1– STA. 24+25.00 TO 24+65.00 LT & RT

Contractor Should Investigate These Areas During Construction to Determine if Stabilization Fabric is Required

UNDERCUT DETAIL

SHALLOW UNDERCUT DETAILS

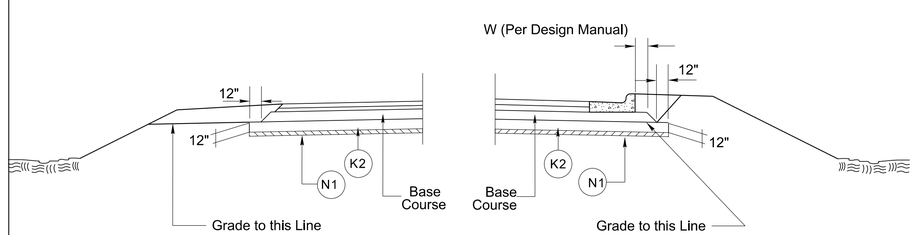

–L– STA. 27+75.00 TO STA. 33+75.00 LT & RT
–L– STA. 33+75.00 TO STA. 34+75.00 LT
–Y1– STA. 6+15.00 TO STA. 13+75.00 LT & RT
–Y1– STA. 33+75.00 TO STA. 35+40.00 LT & RT

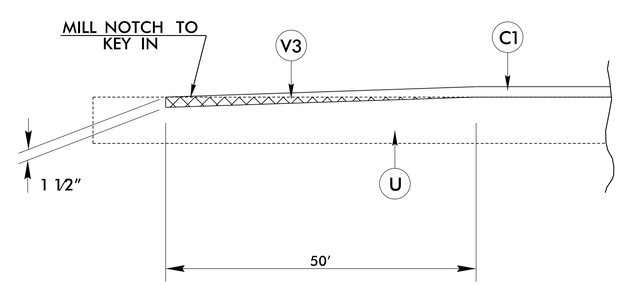

DETAIL FOR INCIDENTAL MILLING

–Y1REV– STA. 11+59.00 TO STA. 12+09.00
–Y1– STA. 34+90.00 TO STA. 35+40.00
–Y2REV– STA. 10+68.00 TO STA. 11+18.00
–Y2REV2– STA. 19+06.00 TO STA. 19+56.00
–RPA– STA. 10+00.00 TO STA. 10+50.00
–RPD– STA. 11+34.38 TO STA. 11+84.38
–Y1– STA. 24+15.00 TO STA. 24+65.00 (BEGIN BRIDGE)
–Y1– STA. 27+95.00 (END BRIDGE) TO STA. 28+45.00

$$$$$SYSTIME$$$$
$$$$$GRAPHDATE$$$$