Docusign Envelope ID: 1F6DD11A-5A9A-4DCE-B6BD-A218182A306D

HDR Engineering, Inc. of the Carolinas
555 Fayetteville St, Suite 900 Raleigh, N.C. 27601
N.C.B.E.L.S. License Number: F-0116

TIP NO.	SHEET NO.
R-4463A	PMP-6

APPROVED: Michael T. Rzepka

DATE: 5/22/2025

SEAL

NORTH CAROLINA PROFESSIONAL SEAL 15876 ENGINEER MICHAEL T. RZEPKA

DOCUMENT NOT CONSIDERED FINAL UNLESS ALL SIGNATURES COMPLETED

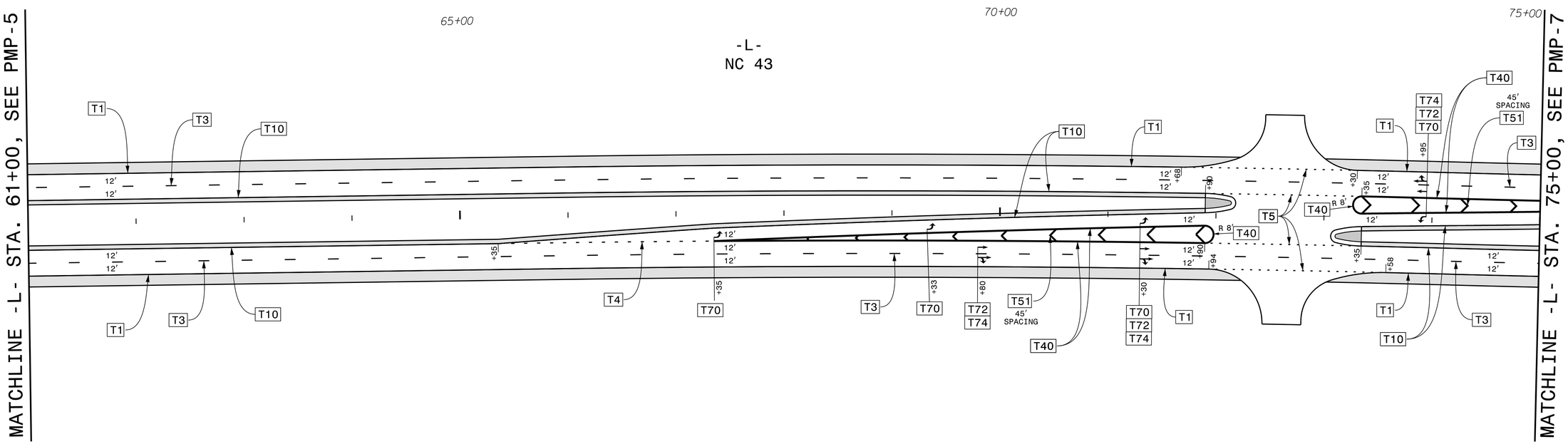

PAVEMENT MARKING DETAIL

PLOT DRIVER: NCDOT_pdf_color_eng_50.plt PENTABLE: NCDOT_PMP.tbl
USER: CHARNDEN DATE: 2/14/2025 TIME: 10:40:48 AM
FILE: pw:\\pwhdruseas01:HDR_US_East_01\Documents\3322\10001377\10086176\6.0_CAD_BIM\6.2_Work_In_Progress\R-4463A\Trafficl\Pavement Marking\R4463A_PM_PMP06.dgn