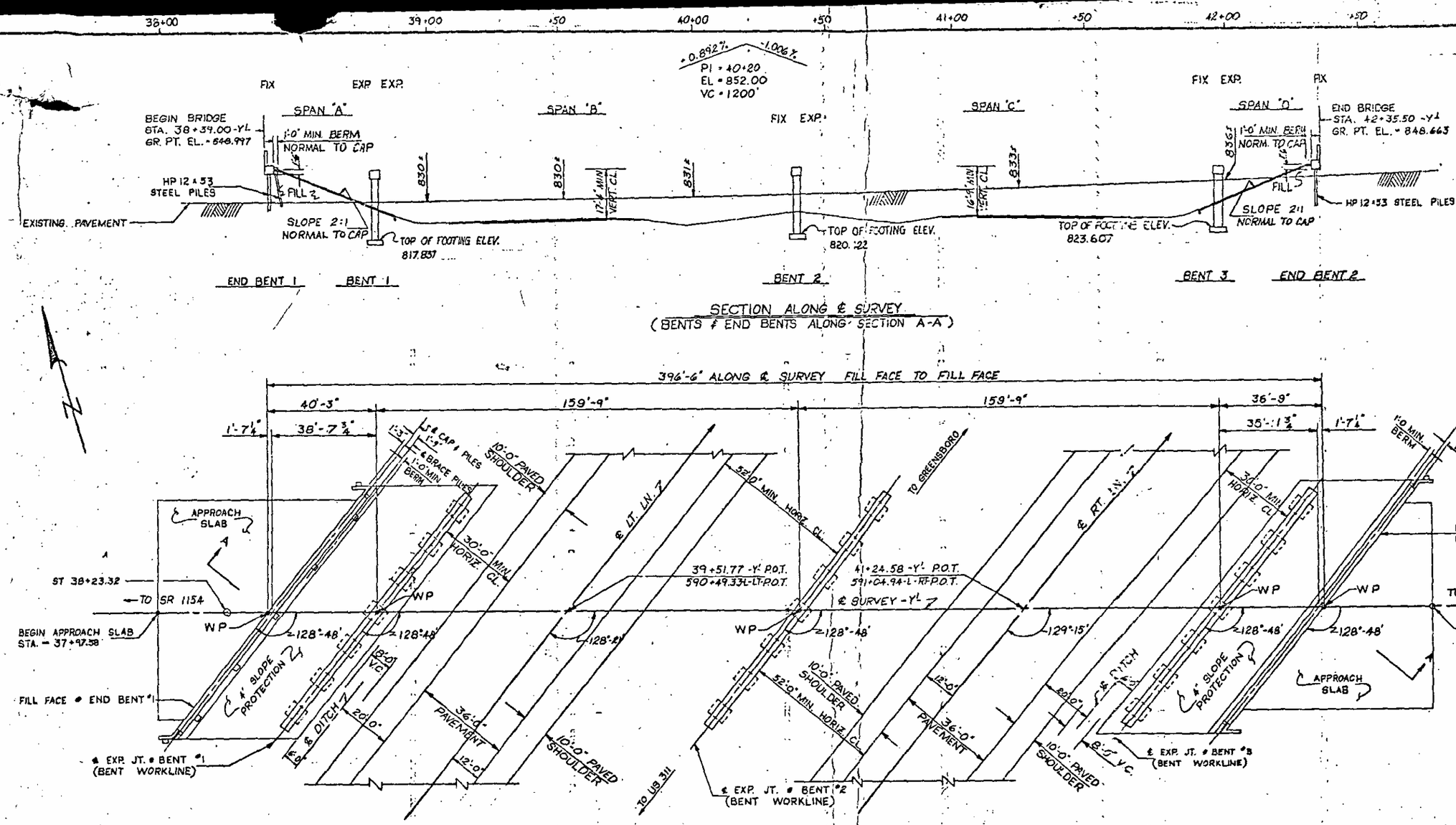

SECTION ALONG ℄ SURVEY
(BENTS & END BENTS ALONG SECTION A-A)

PLAN

NOTE: PILES NOT SHOWN IN PLAN VIEW.

--- NOTES ---

ASSUMED LIVE LOAD = HS 20-44 OR ALTERNATE LOADING.

FOR OTHER DESIGN DATA AND GENERAL NOTES, SEE SHEET S-N.

COMPUTED FOUNDATION LOAD FOR BENTS NO.1, 2 & 3 EQUALS 4.0 TONS PER SQ. FT.

PILES FOR END BENTS NO.1 & 2 TO BE DRIVEN TO A MINIMUM BEARING CAPACITY OF 40 TONS EACH.

WORK IS NOT TO BE STARTED ON THIS BRIDGE UNTIL ROADWAY SECTION HAS BEEN EXCAVATED BY THE ROADWAY CONTRACTOR UNLESS OTHERWISE PERMITTED BY THE ENGINEER.

FOUNDATION EXCAVATION TO BE MEASURED FROM THE BASIC ROADWAY TYPICAL SECTION.

THE ROADWAY CONTRACTOR WILL BE REQUIRED TO REMOVE THE EXISTING PAVEMENT AND SCARIFY THE ROADBED TO A MINIMUM DEPTH OF 2.0 FT. WITHIN THE AREA OF THE END BENT PILES.

ALL STRUCTURAL STEEL FOR THIS STRUCTURE SHALL BE UNPAINTED ASTM A588 STEEL WITH A MINIMUM YIELD STRENGTH OF 50,000 PSI, UNLESS OTHERWISE NOTED ON THE PLANS.

FOR SURFACE PREPARATION AND PROTECTION FOR UNPAINTED STRUCTURAL STEEL, SEE SPECIAL PROVISIONS.

FOR PROTECTION OF SUBSTRUCTURE, SEE SPECIAL PROVISIONS.

SUPERSTRUCTURE REINFORCING STEEL LENGTHS ARE BASED ON THE FOLLOWING MINIMUM SPLICE LENGTHS		
BAR SIZE	SUPERSTRUCTURE AND APPROACH SLABS EXCEPT PARAPET, CURTAIN WALL AND BARRIER RAIL	PARAPET, CURTAIN WALL AND BARRIER RAIL
#4	1'-2"	1'-7"
#5	1'-5"	2'-0"
#6	1'-10"	2'-7"

#524

BM 46 JS-7 49' LT. OF STA. 35+80 -Y'- EL. 831.31 MSL

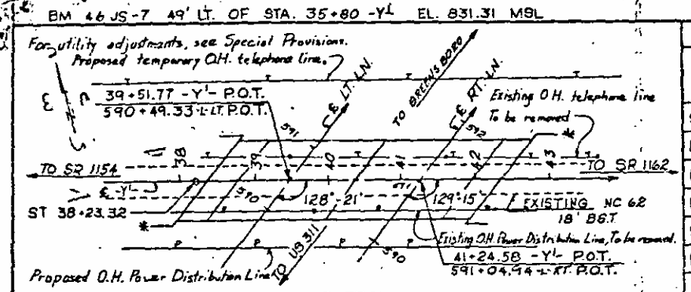

LOCATION SKETCH

DRAWN BY R.R. GUSKE DATE 4-19-78
CHECKED BY W.S.T. DATE JAN. 78

* DENOTES LOCATION OF GUARDRAIL ATTACHMENT.

TOTAL BILL OF MATERIALS

	FOUNDATION EXCAVATION CU. YDS.	CLASS "AA" CONCRETE CU. YDS.	CLASS "A" CONCRETE CU. YDS.	REINF'G. STEEL LBS.	SPIRAL COLUMN REINF'G. STEEL LBS.	STRUCTURAL STEEL APPROX. LBS.	HP 12 x 53 STEEL PILES NO.	HP 12 x 53 STEEL PILES LIN. FT.	CONC. BARRIER RAIL LIN. FT.	LINSEED OIL CONCRETE PROTECTION S.Y.	BRIDGE APPROACH SLABS LUMP SUM	4" SLOPE PROTECTION SQ. YDS.	EXPANSION JOINT SEALS LUMP SUM
SUPERSTRUCTURE		1067.5		242,176		1,470,100			798.67	78			LUMP SUM
END BENT #1			43.4	9482			20	400			LUMP SUM	685	
BENT #1	330		134.6	27067	4601								
BENT #2	230		142.7	28037	5940								
BENT #3	210		120.5	21808	3279								
END BENT #2			42.5	8395			14	280			LUMP SUM	655	
MEDIAN		26.5		1968									
TOTAL	770	1094.0	483.7	339,934	11820	1,470,100	34	680	798.67	78	LUMP SUM	1340	LUMP SUM

PROJECT NO. 8.1531705
RANDOLPH - GUILFORD COUNTY
STATION: 590+49.33 -L- LT. LN.

STATE OF NORTH CAROLINA
DEPARTMENT OF TRANSPORTATION
RALEIGH

GENERAL DRAWING
FOR BRIDGE ON NC 62 OVER I-85 BETWEEN SR 1154 AND SR 1162.

APRIL 1978

REVISIONS						SHEET NO.
NO.	BY	DATE	NO.	BY	DATE	S-30
1			3			TOTAL SHEETS
2			4			122

J SPEE 5/1/82

FED. ROAD DIV. NO.	STATE	PROJECT NO.
4	N.C.	

F. A. PROJECT

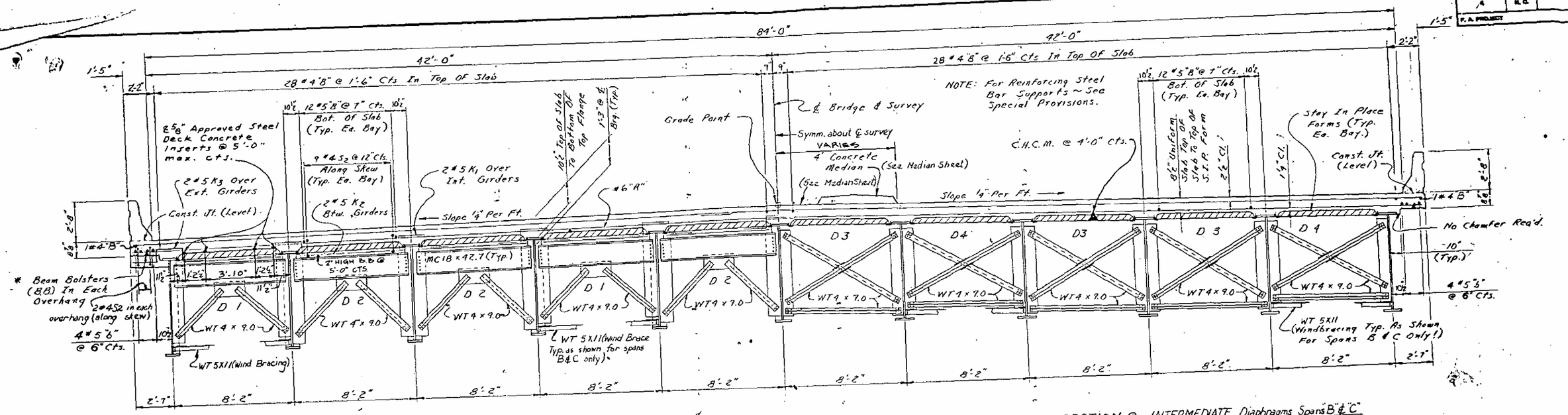

PART SECTION @ BENT Diaphragms - Span "B" & "C"

(Showing Bent Diaphragms D 1 & D 2)

(Similar for Spans "A" & "D")

PART SECTION @ INTERMEDIATE Diaphragms Spans "B" & "C"

(Showing Intermediate Diaphragms D 3 & D 4)

(Similar for Spans A & D)

* Contractor Will Be Required To Determine The Height Of The Beam Bolster In The Slab Overhang @ The Location Shown.

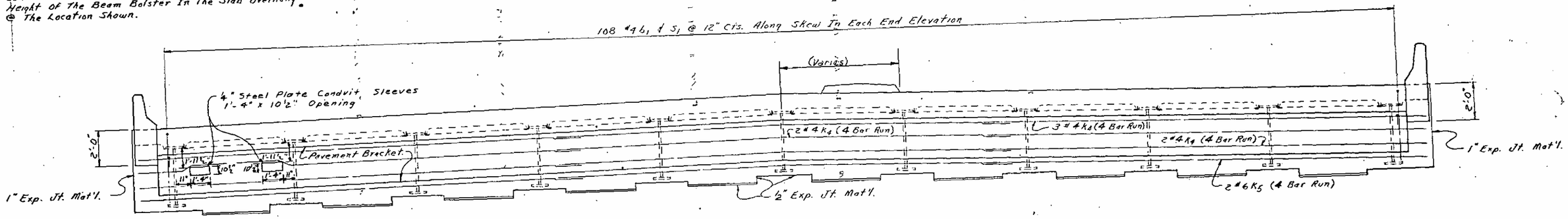

END ELEVATION

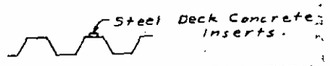

LOCATION OF INSERTS IN CORRUGATION

NOTES

Dimensions shown for location of inserts & sleeves are for the benefit of the Contractor only and are not to be construed as approval of the attachments.

For responsibility of furnishing & placing Conc. inserts and Conduit sleeves, See Special Provisions.

Conduit sleeves to be flush with faces of End Curtain Wall & Pvt. Bracket.

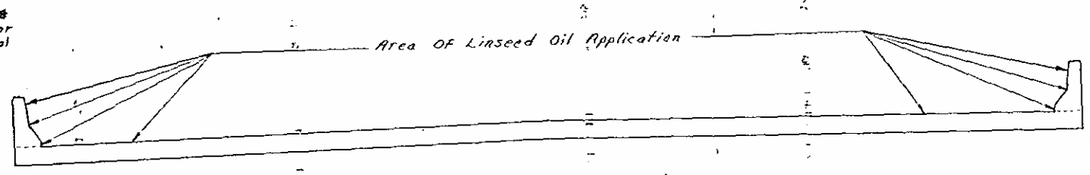

LINSEED OIL CONCRETE PROTECTION

PROJECT NO. B-1531705

RANDOLPH-GUILFORD COUNTY

STATION: 590+49.33-L- LT. LN.

STATE OF NORTH CAROLINA
DEPARTMENT OF TRANSPORTATION AND HIGHWAY SAFETY
RALEIGH

SUPERSTRUCTURE TYPICAL SECTIONS

JUNE 1978

REVISIONS						
NO.	BY	DATE	NO.	BY	DATE	
1			3			
2			4			

SHEET NO. 5-33
TOTAL SHEETS 122

DRAWN BY G. Lane DATE June 1978
CHECKED BY W.S.T. DATE DEC. 78

6042

FED. ROAD DIV. NO.	STATE	PROJECT NO.
4	N. C.	
F. A. PROJECT		

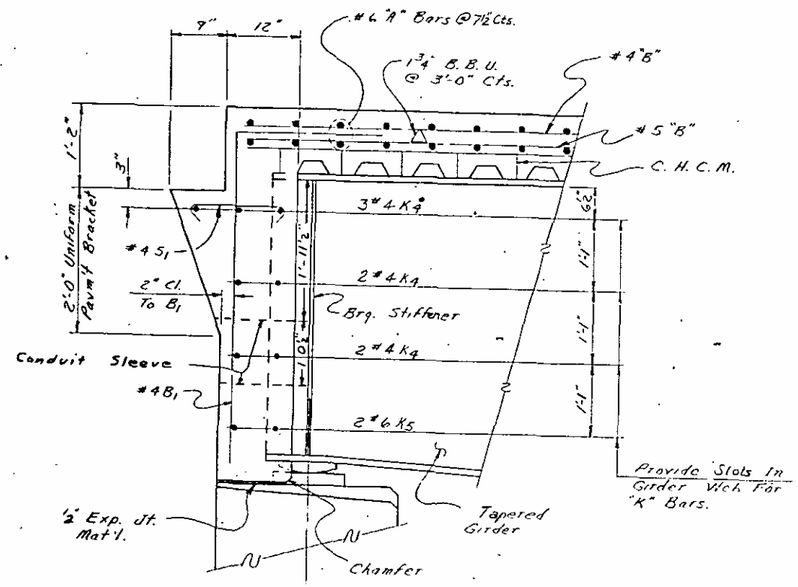

SECTION THRU CURTAIN WALL

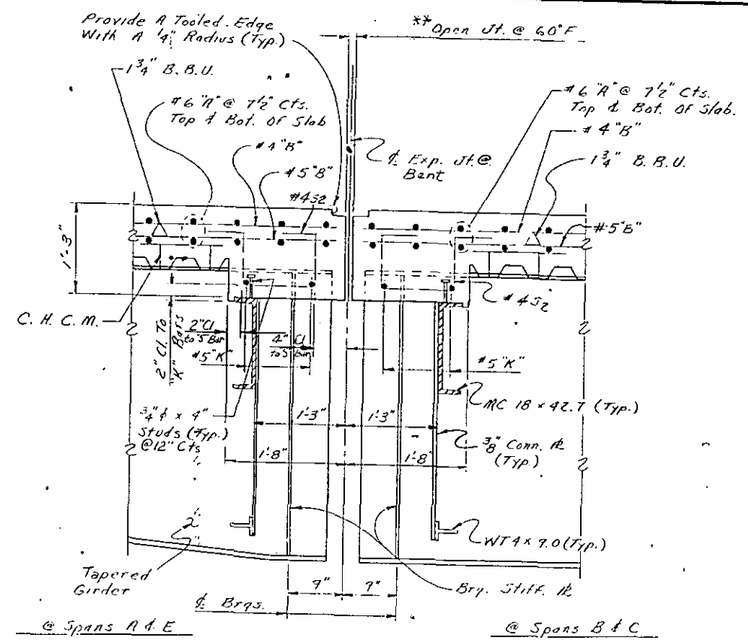

SECTION THRU BENT DIAPHRAGMS

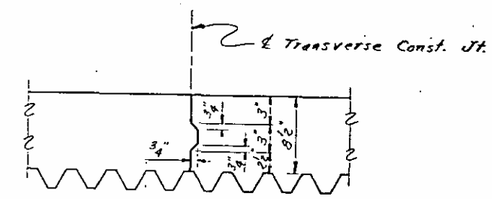

TRANSVERSE CONSTRUCTION JOINT IN DECK SLAB

(Reinf. Steel not shown for clarity)

The Expansion Jt. Seal Shall Be Capable Of Handling A Total Thermal Movement Measured Parallel To The ℄ Rdwy. Of
1⅞" (15/16 Expansion & 15/16 Contraction) For Bent #1
1½" (¾" Expansion & ¾" Contraction) For Bent #2
⅜" (3/16 Expansion & 3/16 Contraction) For Bent #3
Measured From A Midpoint Temperature Of 60°F ~ See Special Provisions.
Expansion Jt. Devices To Be Set ¼" Below Top Of Slab.
For Expansion Jt. Seal, see Special Provisions.

** OPEN JOINT WIDTHS (MEASURED PERPENDICULAR TO ℄ BENT)

	@ Bent #1	@ Bent #2	@ Bent #3
30°F	2⅛	1⅞	1 3/16
60°F	1¾	1⅝	1⅛
90°F	1⅜	1⅜	1 1/16

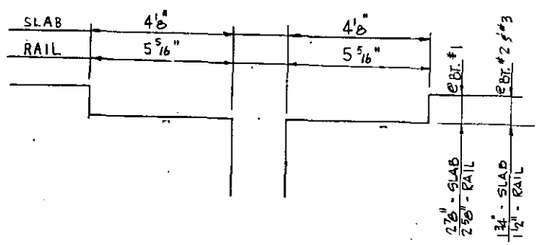

EXP. JT. DETAIL

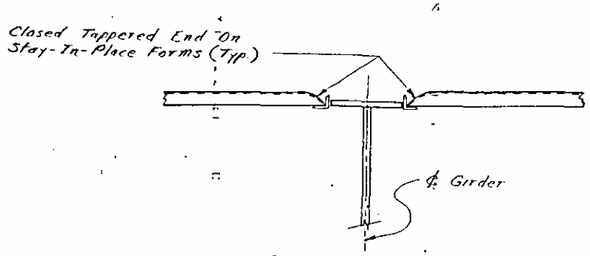

STAY-IN-PLACE METAL FORM DETAIL

(For fabricated metal stay-in-place forms, see Special Provisions)

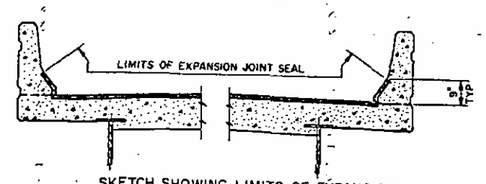

SKETCH SHOWING LIMITS OF EXPANSION JOINT SEAL - BARRIER RAIL

PROJECT NO. 8.1531705

RANDOLPH-GUILFORD COUNTY

STATION: 570+47.33-L- Lt. Ln.

STATE OF NORTH CAROLINA
DEPARTMENT OF TRANSPORTATION AND HIGHWAY SAFETY
RALEIGH

SUPERSTRUCTURE TYPICAL SECTIONS

JUNE 1978

REVISIONS						
NO.	BY	DATE	NO.	BY	DATE	
1	CEP	10-8-79	3			
2			4			

SHEET NO. 5-34
TOTAL SHEETS 122

DRAWN BY: G. Lane DATE: June 1978
CHECKED BY: W.S.T. DATE: Dec. 78

REV. 1: ADD EXP. JT. DETAIL. BY: WST 8-79

FED. ROAD DIV. NO.	STATE	PROJECT
4	N. C.	
F. A. PROJECT		

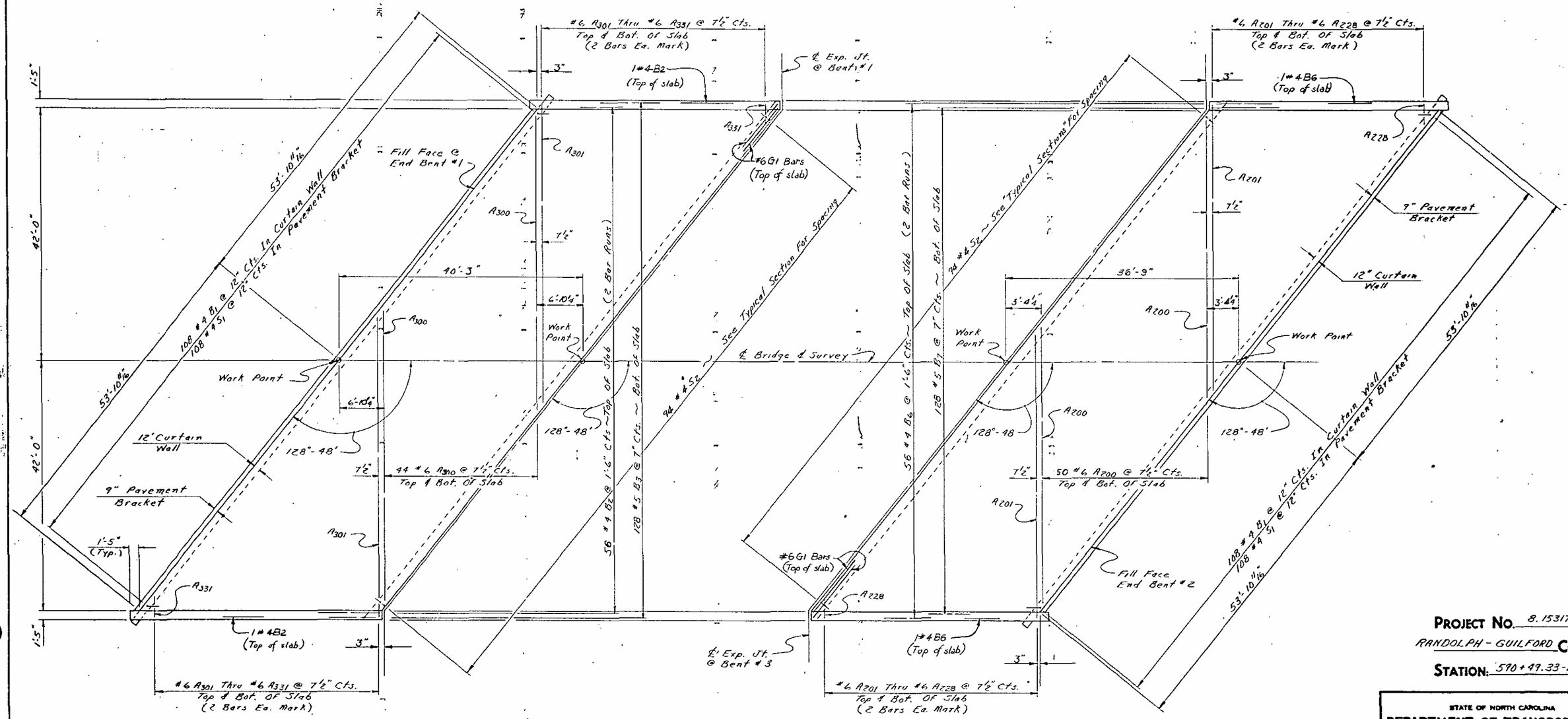

PROJECT NO. 8.1531705

RANDOLPH - GUILFORD **COUNTY**

STATION: 590+49.33-L-Lt. Ln.

STATE OF NORTH CAROLINA
DEPARTMENT OF TRANSPORTATION AND HIGHWAY SAFETY
RALEIGH

SUPERSTRUCTURE
PLAN-SPAN A&D

JUNE 1978

REVISIONS						SHEET NO.
NO.	BY	DATE	NO.	BY	DATE	S-35
1			3			TOTAL SHEETS
2			4			122

DRAWN BY G. Lane DATE June 1978
CHECKED BY W.S.T. DATE DEC. 78

FED. ROAD DIV. NO.	STATE	PROJECT NO.
4	N.C.	
F. A. PROJECT		

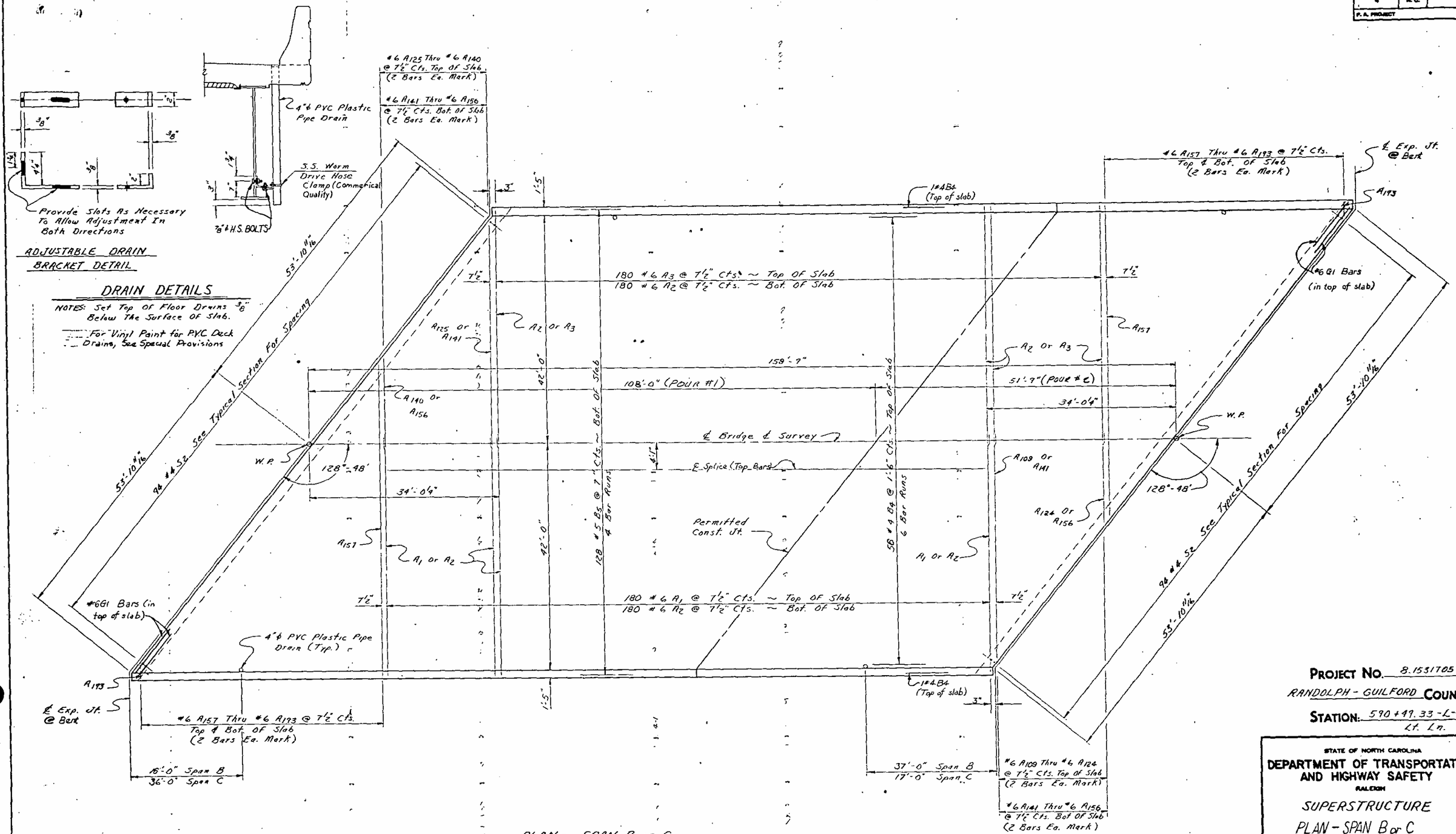

PROJECT NO. 8.1531705

RANDOLPH - GUILFORD COUNTY

STATION: 590+49.33 -L- Lt. Ln.

STATE OF NORTH CAROLINA
DEPARTMENT OF TRANSPORTATION AND HIGHWAY SAFETY
RALEIGH

SUPERSTRUCTURE
PLAN - SPAN B or C

JUNE 1978

REVISIONS						
NO.	BY	DATE	NO.	BY	DATE	
1			3			
2			4			

SHEET NO. S-36
TOTAL SHEETS 122

DRAWN BY G. Lang DATE June 1978
CHECKED BY W.S. DATE DEC. 78

SPAN "A"

BAR	NUMBR	SIZE	TYPE	LENGTH	WEIGHT
A300	88	6	STR	49- 2	6,499
A301	8	6	STR	49- 9	598
A302	8	6	STR	48- 3	580
A303	8	6	STR	46- 8	561
A304	8	6	STR	45- 1	542
A305	8	6	STR	43- 7	524
A306	8	6	STR	42- 0	505
A307	8	6	STR	40- 5	486
A308	8	6	STR	38-11	468
A309	8	6	STR	37- 4	449
A310	8	6	STR	35- 9	430
A311	8	6	STR	34- 3	412
A312	8	6	STR	32- 8	393
A313	8	6	STR	31- 1	373
A314	8	6	STR	29- 7	355
A315	8	6	STR	28- 0	336
A316	8	6	STR	26- 5	317
A317	8	6	STR	24-11	299
A318	8	6	STR	23- 4	280
A319	8	6	STR	21-10	262
A320	8	6	STR	20- 3	243
A321	8	6	STR	18- 8	224
A322	8	6	STR	17- 2	206
A323	8	6	STR	15- 7	187
A324	8	6	STR	14- 0	168
A325	8	6	STR	12- 6	150
A326	8	6	STR	10-11	131
A327	8	6	STR	9- 4	112
A328	8	6	STR	7-10	94
A329	8	6	STR	6- 3	75
A330	8	6	STR	4- 8	56
A331	8	6	STR	3- 2	38
B1	108	4	1	7- 0	505
B2	116	4	STR	20- 6	1,589
B3	128	5	STR	39- 9	3,307
F1	8	5	STR	4- 0	33
G1	2	6	STR	6- 0	18
K1	18	5	2	6- 6	122
K2	20	5	STR	10- 0	209
K3	4	5	3	7- 0	29
K4	28	4	STR	29- 3	547
K5	8	6	STR	30- 3	363
S1	108	4	4	2- 0	144
S2	94	4	5	4- 0	251

GRAND TOTAL 23,470

SPAN "B" OR "C"

BAR	NUMBR	SIZE	TYPE	LENGTH	WEIGHT
A1	180	6	STR	40- 1	10,837
A2	360	6	STR	44- 2	23,882
A3	180	6	STR	48- 3	13,045
A109	2	6	STR	37- 2	112
A110	2	6	STR	35- 7	107
A111	2	6	STR	34- 1	102
A112	2	6	STR	32- 6	98
A113	2	6	STR	30-11	93
A114	2	6	STR	29- 5	88
A115	2	6	STR	27-10	84
A116	2	6	STR	26- 3	79
A117	2	6	STR	24- 9	74
A118	2	6	STR	23- 2	70
A119	2	6	STR	21- 7	65
A120	2	6	STR	20- 1	60
A121	2	6	STR	18- 6	56
A122	2	6	STR	16-11	51
A123	2	6	STR	15- 5	46
A124	2	6	STR	13-10	42
A125	2	6	STR	45- 4	136
A126	2	6	STR	43- 9	131
A127	2	6	STR	42- 2	127
A128	2	6	STR	40- 8	122
A129	2	6	STR	39- 1	117
A130	2	6	STR	37- 6	113
A131	2	6	STR	36- 0	108
A132	2	6	STR	34- 5	103
A133	2	6	STR	32-10	99
A134	2	6	STR	31- 4	94
A135	2	6	STR	29- 9	89
A136	2	6	STR	28- 3	85
A137	2	6	STR	26- 8	80
A138	2	6	STR	25- 1	75
A139	2	6	STR	23- 7	71
A140	2	6	STR	22- 0	66
A141	4	6	STR	41- 3	248
A142	4	6	STR	39- 8	238
A143	4	6	STR	38- 1	229
A144	4	6	STR	36- 7	220
A145	4	6	STR	35- 0	210
A146	4	6	STR	33- 5	201
A147	4	6	STR	31-11	192
A148	4	6	STR	30- 4	182
A149	4	6	STR	28- 9	173
A150	4	6	STR	27- 3	164
A151	4	6	STR	25- 8	154
A152	4	6	STR	24- 2	145
A153	4	6	STR	22- 7	136
A154	4	6	STR	21- 0	126
A155	4	6	STR	19- 6	117
A156	4	6	STR	17-11	108
A157	8	6	STR	58- 8	705
A158	8	6	STR	57- 2	687
A159	8	6	STR	55- 7	668
A160	8	6	STR	54- 0	649
A161	8	6	STR	52- 6	631
A162	8	6	STR	50-11	612
A163	8	6	STR	49- 4	593
A164	8	6	STR	47-10	575
A165	8	6	STR	46- 3	556
A166	8	6	STR	44- 8	537
A167	8	6	STR	43- 2	519
A168	8	6	STR	41- 7	500
A169	8	6	STR	40- 0	481
A170	8	6	STR	38- 6	463
A171	8	6	STR	36-11	444
A172	8	6	STR	35- 4	425
A173	8	6	STR	33-10	407
A174	8	6	STR	32- 3	388
A175	8	6	STR	30- 8	368
A176	8	6	STR	29- 2	350
A177	8	6	STR	27- 7	331
A178	8	6	STR	26- 0	312
A179	8	6	STR	24- 6	294
A180	8	6	STR	22-11	275
A181	8	6	STR	21- 4	256
A182	8	6	STR	19-10	238
A183	8	6	STR	18- 3	219
A184	8	6	STR	16- 9	201
A185	8	6	STR	15- 2	182
A186	8	6	STR	13- 7	163
A187	8	6	STR	12- 1	145
A188	8	6	STR	10- 6	126
A189	8	6	STR	8-11	107
A190	8	6	STR	7- 5	89
A191	8	6	STR	5-10	70
A192	8	6	STR	4- 3	51
A193	8	6	STR	2- 9	33
B4	348	4	STR	27- 7	6,412
B5	512	5	STR	40-11	21,850
G1	4	6	STR	6- 0	36
K1	36	5	2	6- 6	244
K2	40	5	STR	10- 0	417
K3	8	5	3	7- 0	58
S2	188	4	5	4- 0	502

GRAND TOTAL 96,619

SPAN "D"

BAR	NUMBR	SIZE	TYPE	LENGTH	WEIGHT
A200	100	6	STR	44-10	6,734
A201	8	6	STR	45- 5	546
A202	8	6	STR	43-10	527
A203	8	6	STR	42- 4	509
A204	8	6	STR	40- 9	490
A205	8	6	STR	39- 2	471
A206	8	6	STR	37- 8	453
A207	8	6	STR	36- 1	434
A208	8	6	STR	34- 6	415
A209	8	6	STR	33- 0	397
A210	8	6	STR	31- 5	378
A211	8	6	STR	29-11	359
A212	8	6	STR	28- 4	340
A213	8	6	STR	26- 9	321
A214	8	6	STR	25- 3	303
A215	8	6	STR	23- 8	284
A216	8	6	STR	22- 1	265
A217	8	6	STR	20- 7	247
A218	8	6	STR	19- 0	228
A219	8	6	STR	17- 5	209
A220	8	6	STR	15-11	191
A221	8	6	STR	14- 4	172
A222	8	6	STR	12- 9	153
A223	8	6	STR	11- 3	135
A224	8	6	STR	9- 8	116
A225	8	6	STR	8- 1	97
A226	8	6	STR	6- 7	79
A227	8	6	STR	5- 0	60
A228	8	6	STR	3- 5	41
B1	108	4	1	7- 0	505
B6	116	4	STR	18- 9	1,453
B7	128	5	STR	36- 3	4,840
F1	8	5	STR	4- 0	33
G1	2	6	STR	6- 0	18
K1	18	5	2	6- 6	122
K2	20	5	STR	10- 0	209
K3	4	5	3	7- 0	29
K4	28	4	STR	29- 3	547
K5	8	6	STR	30- 3	363
S1	108	4	4	2- 0	144
S2	94	4	5	4- 0	251

GRAND TOTAL 23,468

BAR TYPES

ALL DIMENSIONS ARE OUT TO OUT

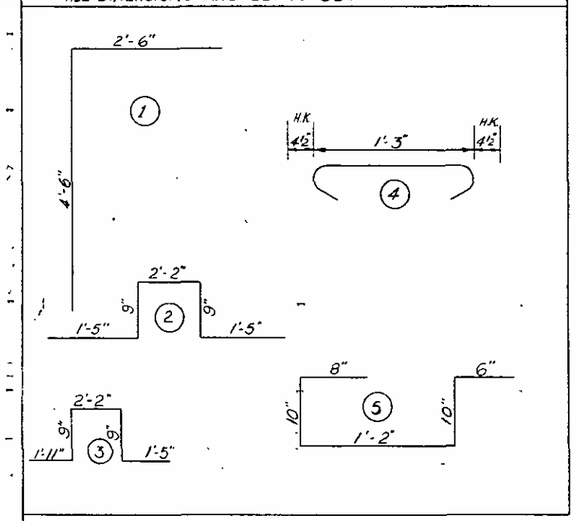

	DIVISION CLASS "AA" CONCRETE		
	SPAN "A"	SPAN "B" or "C"	SPAN "D"
SLAB	126.7	POUR 1 277.1CY POUR 2 134.4CY	117.8

BILL OF MATERIALS FOR SUPERSTRUCTURE

REINFORCING STEEL - LBS.	242,176 LBS.
CLASS "AA" CONC. CU. YDS.	1067.5 C.Y.
STRUCTURAL STEEL - APPROX. LBS.	1,470,100 LBS
CONCRETE BARRIER RAIL LIN.FT.	799.67 LIN. FT.
LINSEED OIL CONC. PROTECTION - GALS	79. GALS
EXPANSION JOINT SEALS	LUMP SUM

FED. ROAD DIV. NO.	STATE	PROJECT NO.
4	N. C.	
F. A. PROJECT		

PROJECT NO. 8153170.5

RANDOLPH-GUILFORD COUNTY

STATION: 590+49.33-L-LT LN

STATE OF NORTH CAROLINA
DEPARTMENT OF TRANSPORTATION AND HIGHWAY SAFETY
RALEIGH

SUPERSTRUCTURE BILL of MATERIALS

DEC. 1979

REVISIONS							SHEET NO.
NO.	BY	DATE	NO.	BY	DATE		S-37
1			3				TOTAL SHEETS
2			4				122

DRAWN BY K. CRAIG DATE 12/79
CHECKED BY W. S. T. DATE DEC. 79

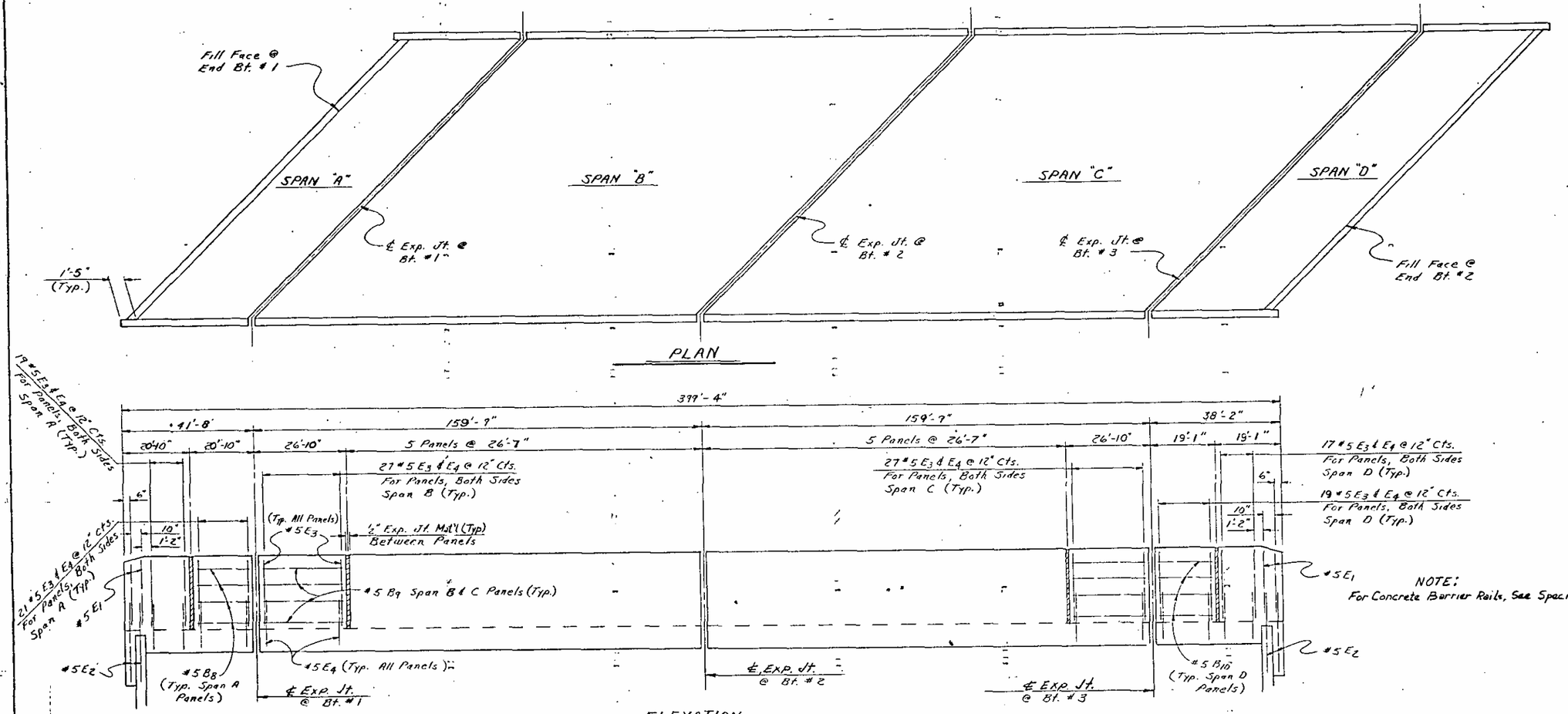

NOTE: For Concrete Barrier Rails, See Special Provisions.

BILL OF MATERIAL FOR BARRIER RAIL ONLY					
BAR	NO.	SIZE	TYPE	LENGTH	WEIGHT
E1	8	#5	1	4'-6"	36
E2	8	#5	2	6'-10"	57
E3	800	#5	1	5'-1"	4242
E4	800	#5	3	4'-10"	4633
B8	32	#5	Str.	20'-5"	681
B9	192	#5	Str.	26'-3"	5257
B10	32	#5	Str.	18'-8"	623
REINF. STEEL - LBS. *					14,731
CLASS "AA" CONC. - C.Y.S *					71.7
BARRIER RAIL - LIN. FT.					798.67

BAR TYPE

ALL DIMENSIONS ARE OUT TO OUT

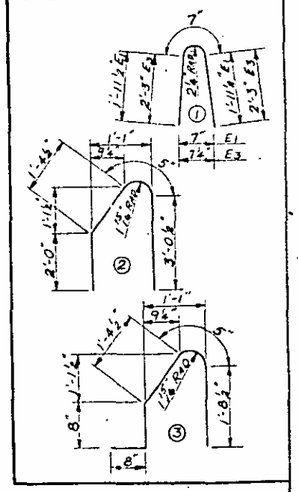

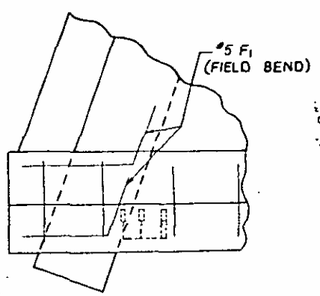

TOP VIEW

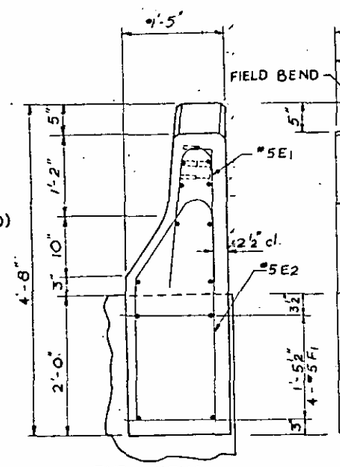

END VIEW

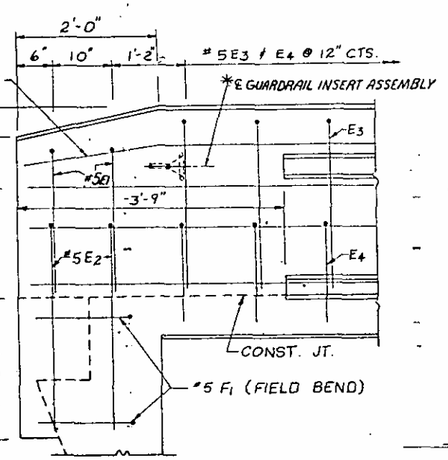

ELEVATION

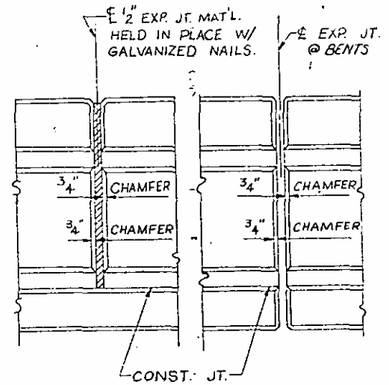

ELEVATION @ EXP. JTS.

*NOTE: SEE STANDARD CURVED END BLOCK AND GUARDRAIL ANCHORAGE SHEET FOR LOCATION AND DETAILS.

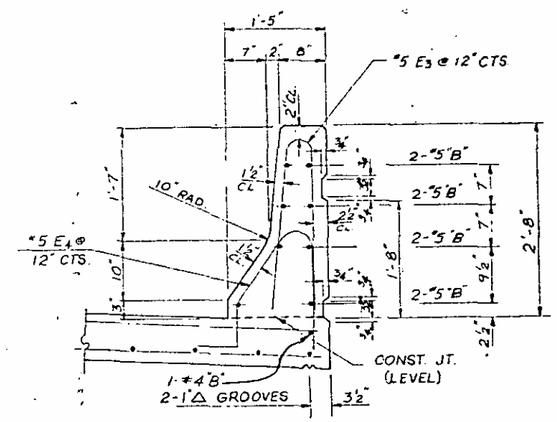

SECTION THRU BARRIER RAIL

PROJECT NO. B.1531705

RANDOLPH - GUILFORD COUNTY

STATION: 570+49.33-L- Lt. Ln.

STATE OF NORTH CAROLINA
DEPARTMENT OF TRANSPORTATION
RALEIGH

SUPERSTRUCTURE
BARRIER RAIL

MAY 1977

REVISIONS								SHEET NO.
NO.	BY	DATE		NO.	BY	DATE		5-38
1				3				TOTAL SHEETS
2				4				122

DRAWN BY G. Lara DATE July 1978
CHECKED BY W.S.T. DATE DEC. 78

BARRIER RAIL END DETAILS

1410-2" W. SURFACE

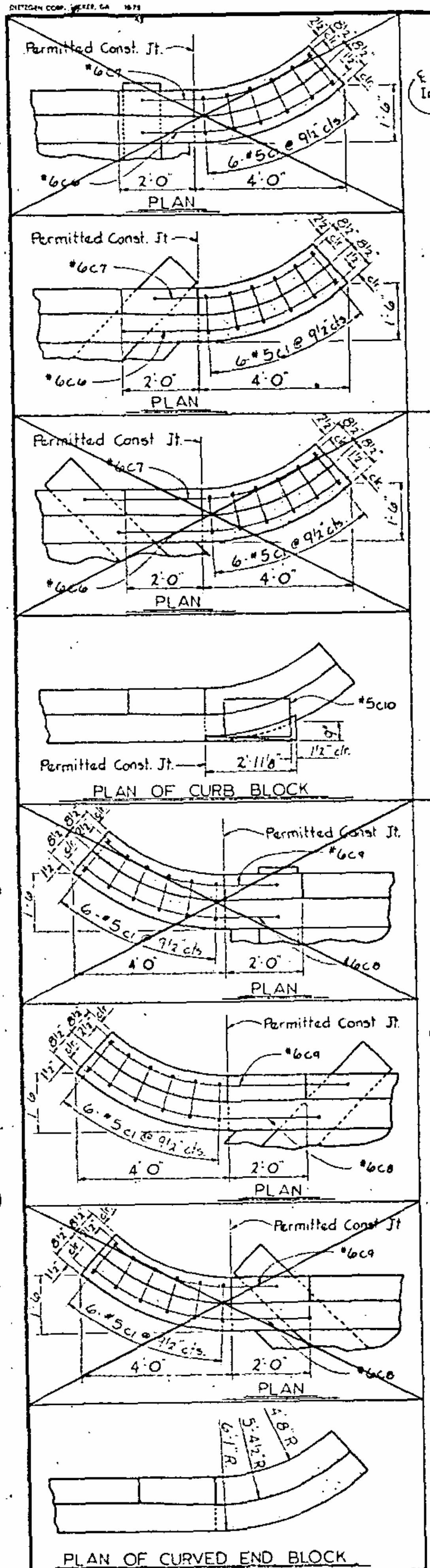

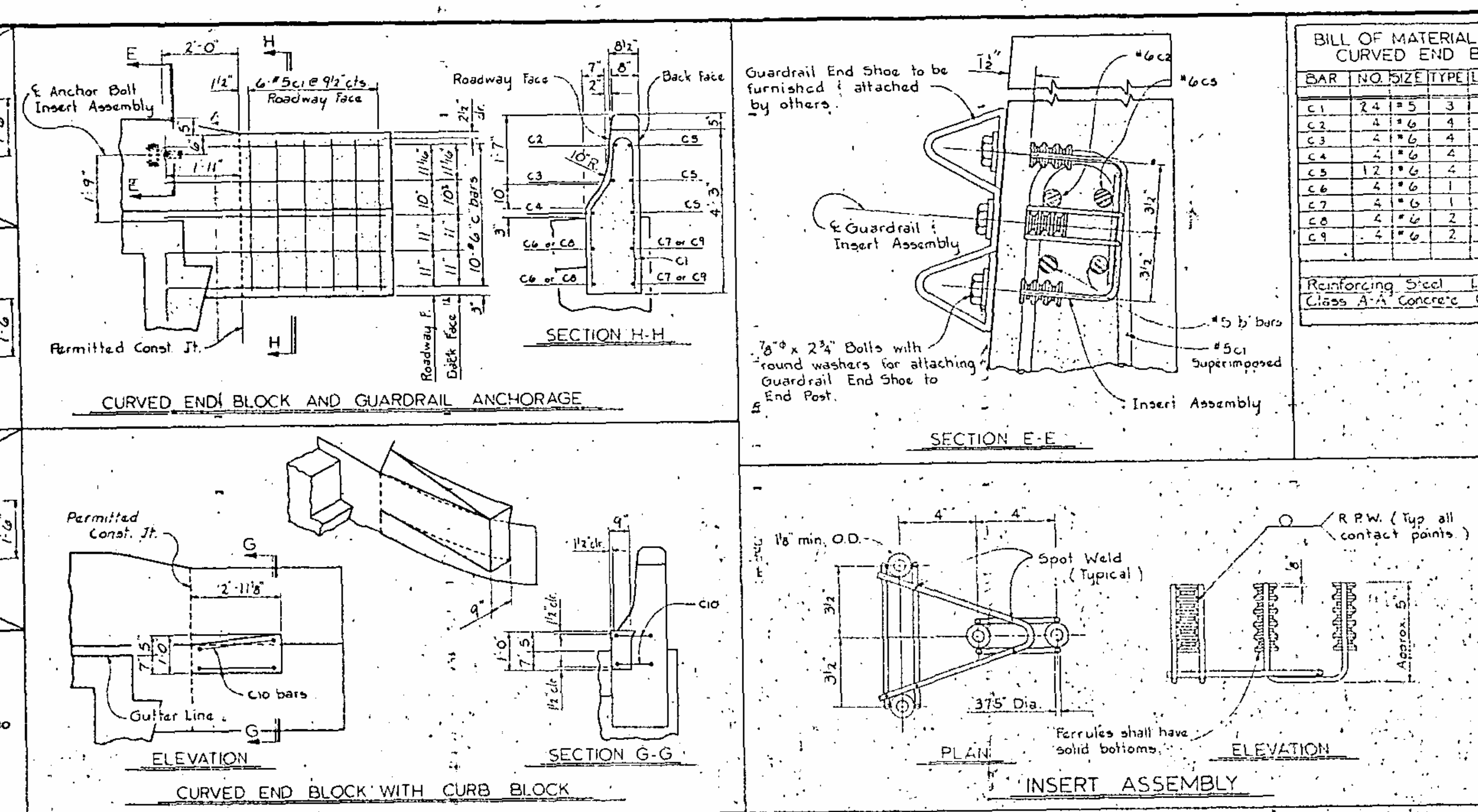

BILL OF MATERIAL FOR FOUR CURVED END BLOCKS					
BAR	NO.	SIZE	TYPE	LENGTH	WEIGHT
C1	24	#5	3	8'-2"	204
C2	4	#6	4	5'-7"	34
C3	4	#6	4	5'-9"	35
C4	4	#6	4	6'-1"	37
C5	12	#6	4	5'-5"	40
C6	4	#6	1	7'-3"	44
C7	4	#6	1	6'-0"	36
C8	4	#6	2	7'-6"	45
C9	4	#6	2	7'-8"	46
Reinforcing Steel Lbs.					579
Class A-A Concrete Cu. Yds.					2.9

BAR TYPES

ALL BAR DIMENSIONS ARE OUT TO OUT.

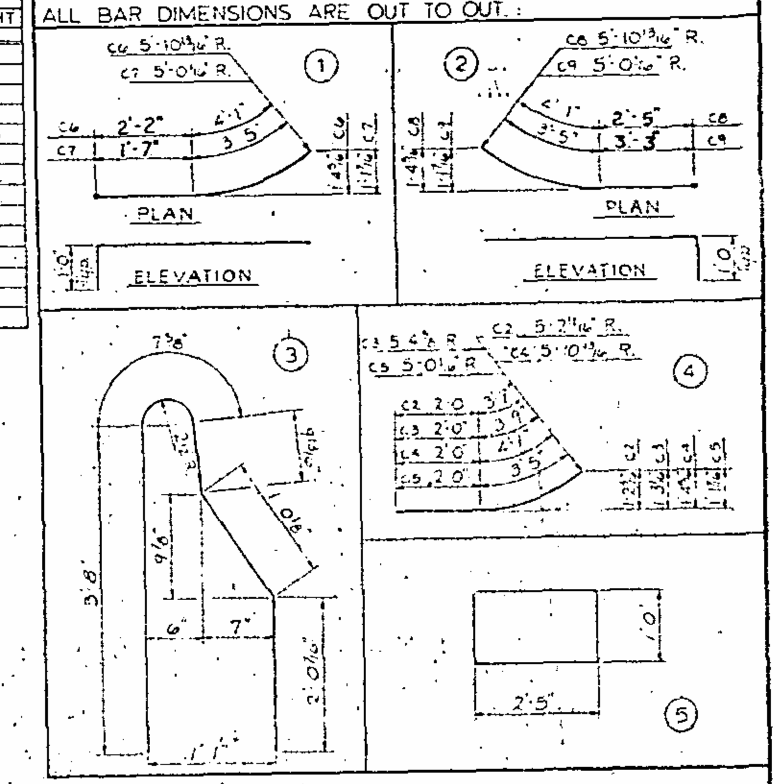

NOTES

1. THE 4 - BOLT INSERT ASSEMBLY UNIT SHALL CONSIST OF THE FOLLOWING COMPONENTS:
   a. FERRULES SHALL BE MADE FROM STEEL MEETING THE REQUIREMENTS OF A.S.T.M. A108, GRADE 12L14 AND SHALL HAVE A MINIMUM LENGTH OF THREADS OF 1¼".
   b. 4 - 7/8"Ø x 2 3/4" BOLTS WITH WASHERS. BOLTS SHALL CONFORM TO THE REQUIREMENTS OF A.S.T.M. A307. BOLTS AND WASHERS SHALL BE GALVANIZED. (AT THE CONTRACTOR'S OPTION, STAINLESS STEEL BOLTS AND WASHERS MAY BE USED AS AN ALTERNATE FOR THE 7/8"Ø x 2 3/4" GALVANIZED BOLTS AND WASHERS. THEY SHALL CONFORM TO OR EXCEED THE MECHANICAL REQUIREMENTS OF A.S.T.M. A307. THE USE OF THIS ALTERNATE SHALL BE APPROVED BY THE ENGINEER.)
   c. WIRE STRUTS SHOWN IN THE INSERT ASSEMBLY DETAIL ARE MINIMUM ALLOWABLE SIZE AND SHALL HAVE A MINIMUM TENSILE STRENGTH OF 100,000 P.S.I.
2. THE INSERT ASSEMBLY WITH BOLTS SHALL BE ASSEMBLED IN THE SHOP. BOLT THREADS MAY BE RECUT AS NECESSARY TO INSURE FIT.
3. THE COST OF THE 4-BOLT INSERT ASSEMBLY UNIT COMPLETE IN PLACE, SHALL BE INCLUDED IN THE UNIT CONTRACT PRICE BID FOR CLASS "AA" CONCRETE.
4. THE 4 - BOLT INSERT ASSEMBLY UNIT IS REQUIRED AT ALL POINTS WHERE APPROACH GUARDRAIL IS TO BE ATTACHED TO THE END POSTS. FOR POINTS OF ATTACHMENT, SEE PLANS.
5. CURVED END BLOCKS ARE REQUIRED AT ALL END POSTS.
6. *THE COST OF FOUR END BLOCKS AND CURB BLOCK, WHEN USED, WHICH INCLUDES CLASS AA CONCRETE, REINFORCING STEEL, EXCAVATION, BACKFILL AND INCIDENTALS NECESSARY FOR THEIR CONSTRUCTION SHALL BE INCLUDED IN THE COST OF THE CONCRETE BARRIER RAIL.*

BILL OF MATERIAL FOR CURB BLOCK						
	Reinforcing Steel - Lbs.					
	BAR	NO	SIZE	TYPE	LENGTH	WEIGHT
4 Blocks	C10	8	#5	5	6'-10"	57

TOTAL BILL OF MATERIAL	
Reinforcing Steel - Lbs. -	636
Class "A A" Concrete - Cu. Yds. -	2.9

PROJECT NO. 8.1531705

RANDOLPH-GUILFORD **COUNTY**

STATION: 590+49.33-L-LTLN

STATE OF NORTH CAROLINA
DEPARTMENT OF TRANSPORTATION
RALEIGH

STANDARD
CURVED END BLOCK, GUARDRAIL ANCHORAGE, AND CURB BLOCK FOR BARRIER RAIL
JULY 1978

REVISIONS						SHEET NO.
NO.	BY	DATE	NO.	BY	DATE	S-39
1			3			TOTAL SHEETS
2			4			122

DRAWN BY Ross Edward Aubert DATE 2-10-76
CHECKED BY R.C. Martin DATE June-76
ASSEMBLED BY: K.CRAIG DATE: 10/78
CHECKED BY: J.C. Hooper DATE: 12-78

FED. ROAD DIV. NO.	STATE	PROJECT NO.
4	N. C.	
F. A. PROJECT		

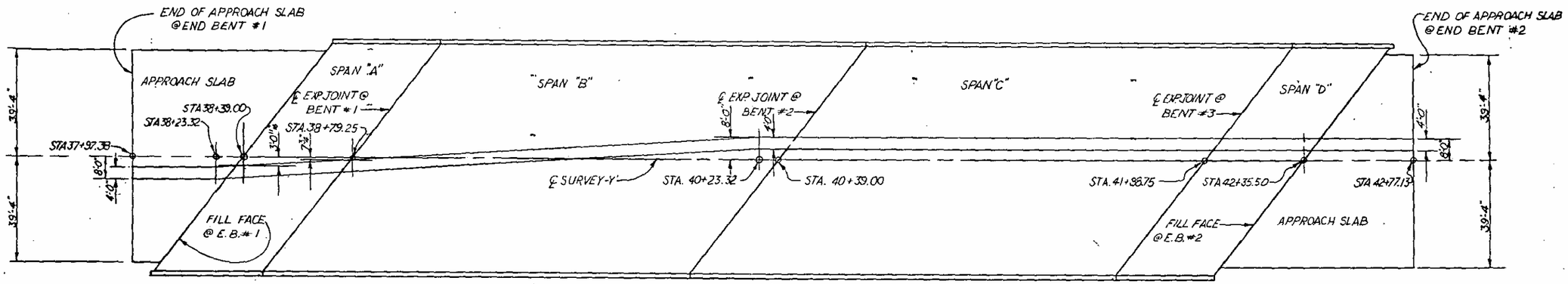

PLAN
(SHOWING MEDIAN)

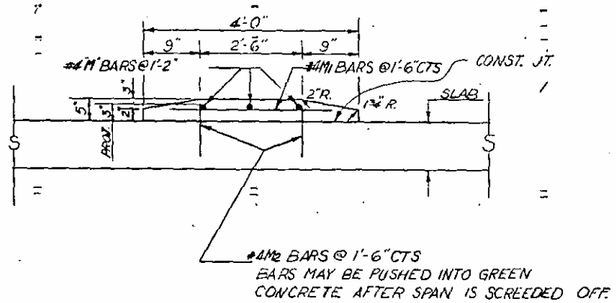

REINFORCING STEEL DETAILS

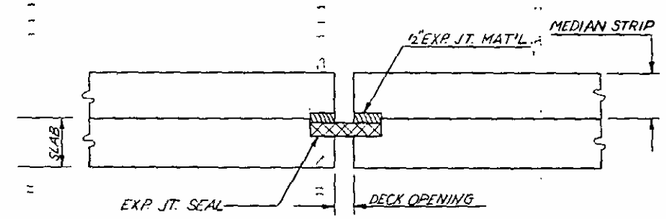

DETAILS of EXPANSION JOINT

M_3 - on APPROACH SLAB @ E.B.#1
M_3 - on APPROACH SLAB @ E.B.#2
M_4 - on SPAN "A"
M_5 " on SPAN "B"
M_6 " on SPAN "C"
M_7 on SPAN "D"

BILL of MATERIALS for MEDIAN

BAR	NO.	SIZE	TYPE	LENGTH	WEIGHT
M1	321	#4	STR	3'-0"	643
M2	642	#4	STR	0'-9"	322
M3	12	#4	STR	20'-2"	162
M4	6	#4	STR	21'-8"	87
M5	18	#4	STR	28'-9"	346
M6	18	#4	STR	27'-7"	332
M7	6	#4	STR	19'-0"	76

TOTAL REINFORCING STEEL 1968 LBS.
CLASS "AA" CONCRETE - CU. YDS. - 26.5

PROJECT NO. 8.1531705
RANDOLPH-GUILFORD COUNTY
STATION: 590+49.33-L-LT LN

STATE OF NORTH CAROLINA
DEPARTMENT OF TRANSPORTATION AND HIGHWAY SAFETY
RALEIGH

MEDIAN DETAILS

REVISIONS						SHEET NO.
NO.	BY	DATE	NO.	BY	DATE	S-40
1			3			TOTAL SHEETS
2			4			122

DRAWN BY K. CRAIG DATE 11-78
CHECKED BY W.S.T. DATE DEC. 78

FED. ROAD DIV. NO.	STATE	P.
4	N. C.	
F. A. PROJECT		

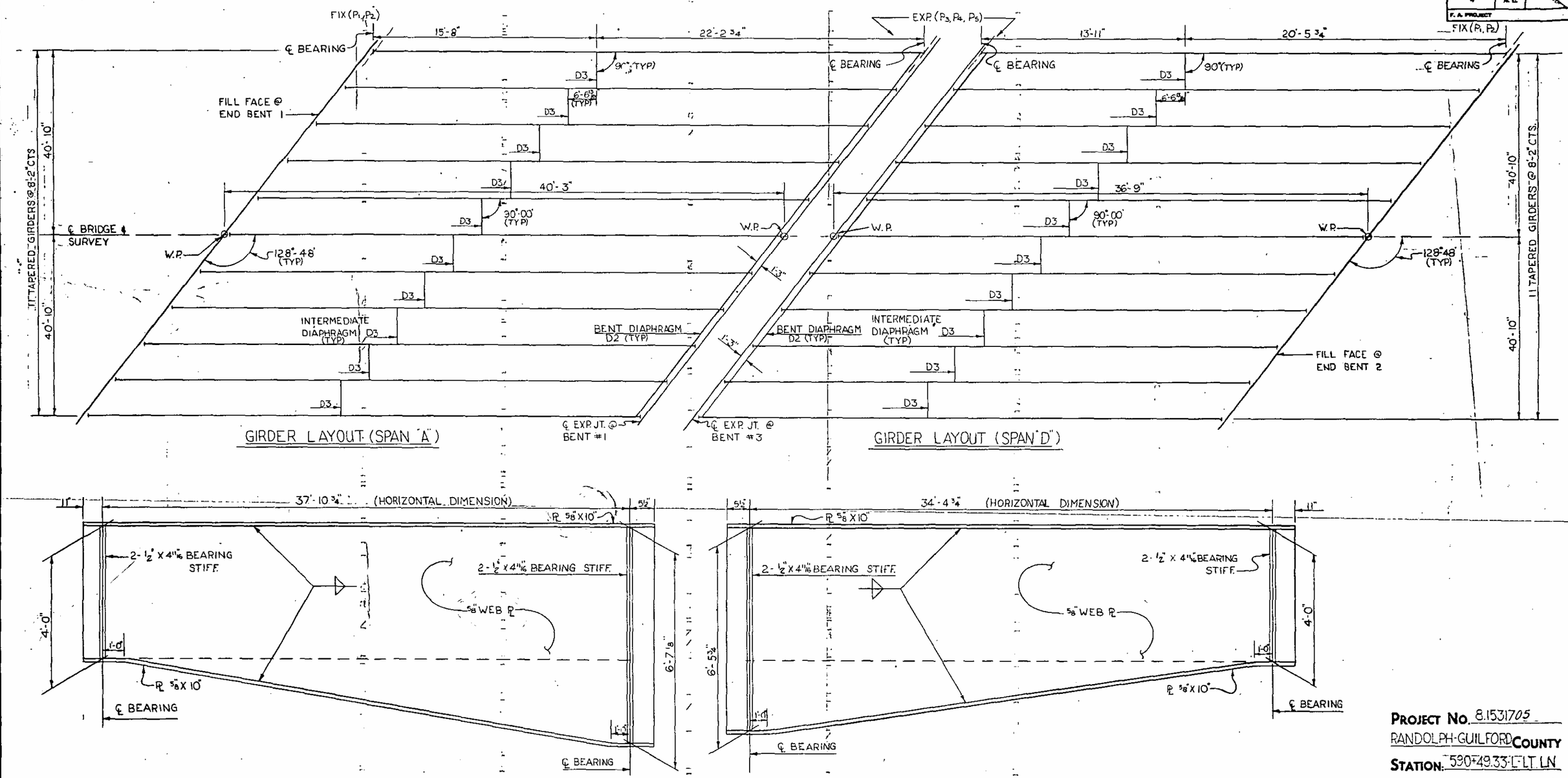

PROJECT NO. 8.1531705
RANDOLPH-GUILFORD **COUNTY**
STATION: 590+49.33 -L- LT. LN

STATE OF NORTH CAROLINA
DEPARTMENT OF TRANSPORTATION AND HIGHWAY SAFETY
RAL EXIM

SUPERSTRUCTURE
STRUCTURAL STEEL DETAILS
SPANS "A" AND "D"

REVISIONS						SHEET NO.
NO.	BY	DATE	NO.	BY	DATE	S-41
1			3			TOTAL SHEETS
2			4			122

DRAWN BY: K. CRAIG DATE: 9/78
CHECKED BY: W.S.T. DATE: DEC 78

FED. ROAD DIV. NO.	STATE	PROJECT NO.
9	N. C.	
F. A. PROJECT		

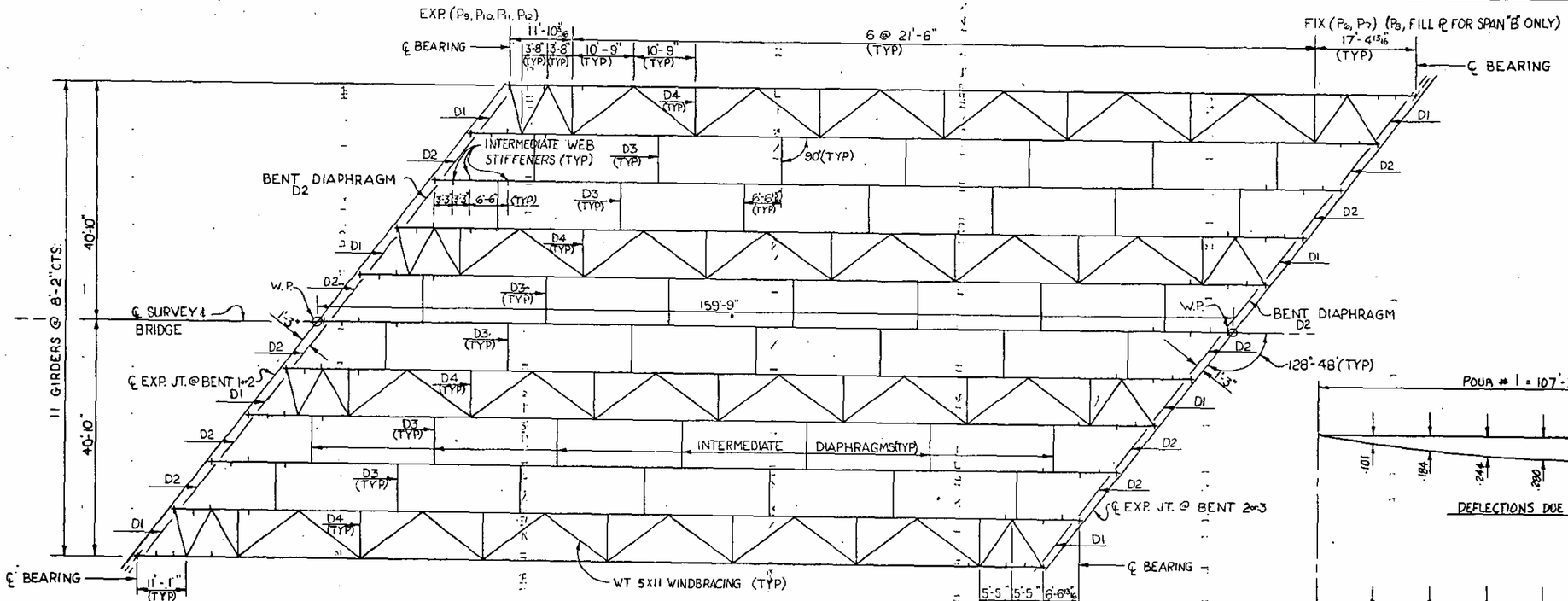

GIRDER LAYOUT SPANS "B" OR "C"

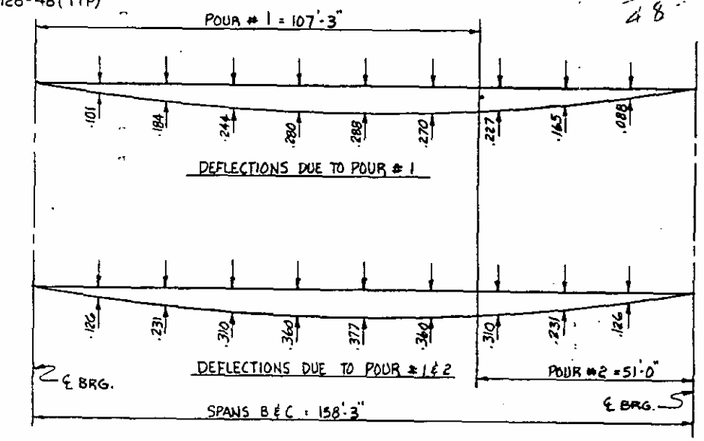

POUR DEFLECTIONS - SPANS "B" & "C"

NOTE: DEFLECTIONS ARE GIVEN IN DECIMALS OF A FOOT @ TENTH POINTS FOR INTERIOR GIRDERS ONLY.

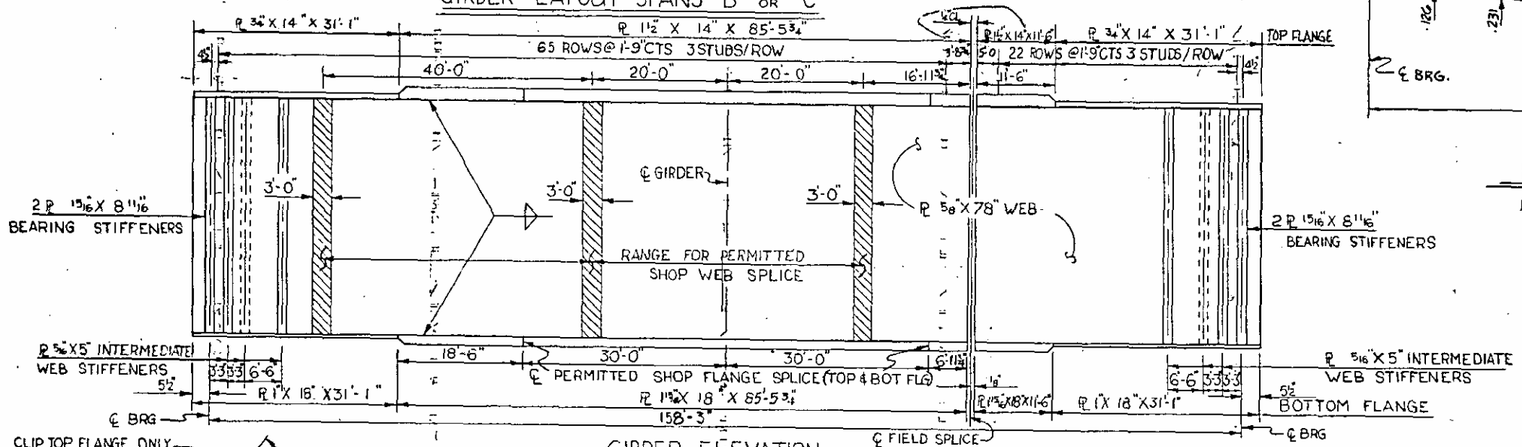

GIRDER ELEVATION

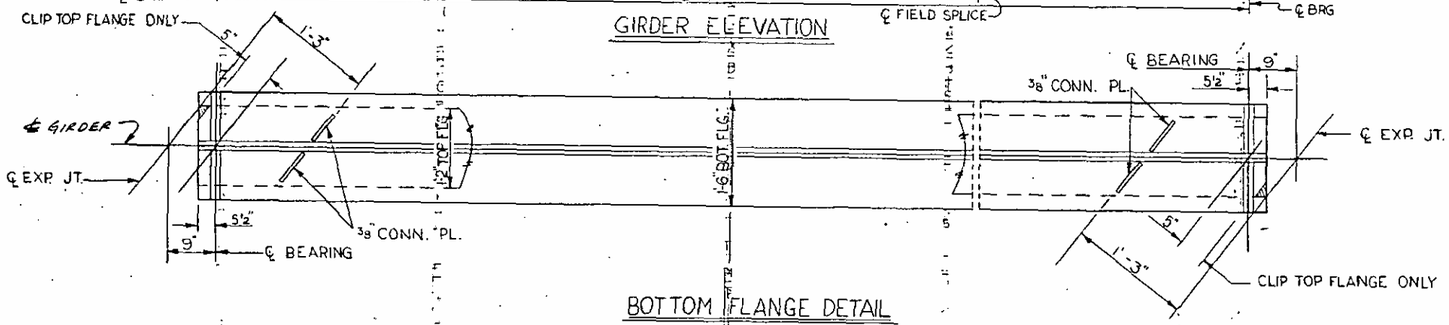

BOTTOM FLANGE DETAIL

PROJECT NO. 8.1531705

RANDOLPH-GUILFORD **COUNTY**

STATION: 590+4933-L-JTLN

STATE OF NORTH CAROLINA
DEPARTMENT OF TRANSPORTATION AND HIGHWAY SAFETY
RALEIGH

SUPERSTRUCTURE
STRUCTURAL STEEL DETAILS
SPANS B & C

REVISIONS						
NO.	BY	DATE	NO.	BY	DATE	
1			3			
2			4			

SHEET NO. S-42
TOTAL SHEETS 122

DRAWN BY K.L.PAK DATE DEC. 78
CHECKED BY W.S.T. DATE DEC. 78

FED. ROAD DIV. NO.	STATE	PROJECT NO.
4	N. C.	
F. A. PROJECT		

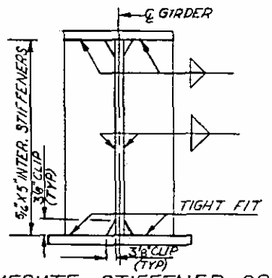

INTERMEDIATE STIFFENER SPANS B & C

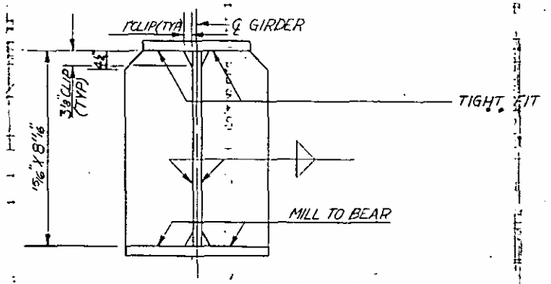

BEARING STIFFENER SPANS B & C

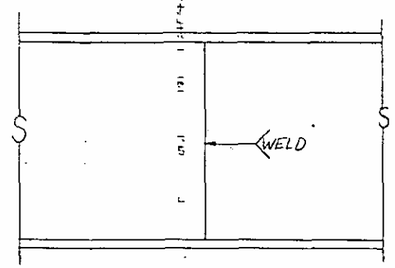

PERMISSIBLE SHOP WEB SPLICE
GRIND FLUSH ON OUTSIDE OF EXTERIOR GIRDER

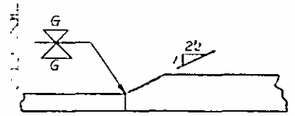

FLANGE SPLICE

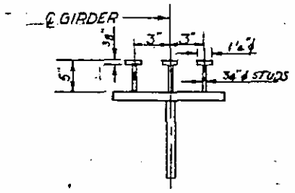

STUD DETAIL

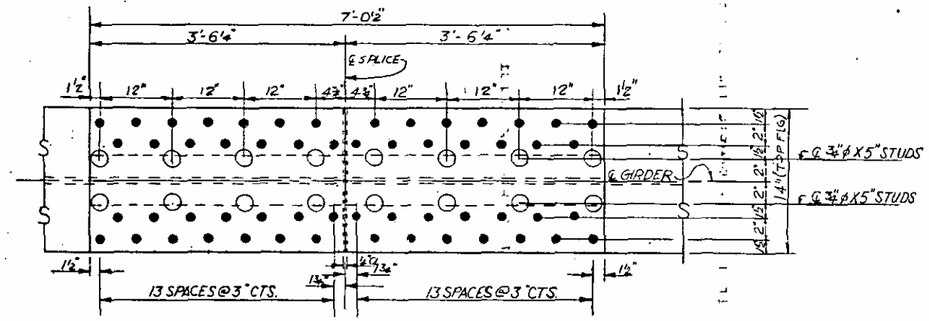

TOP FLANGE SPLICE

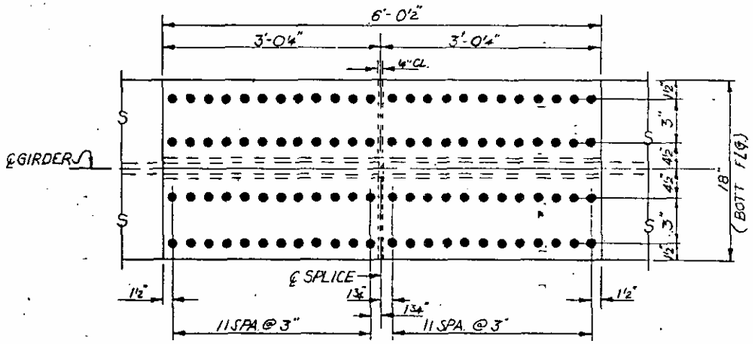

BOTTOM FLANGE SPLICE

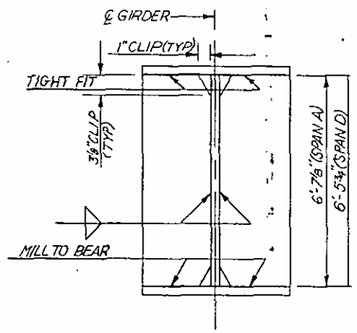

BEARING STIFFENER SPANS A & D

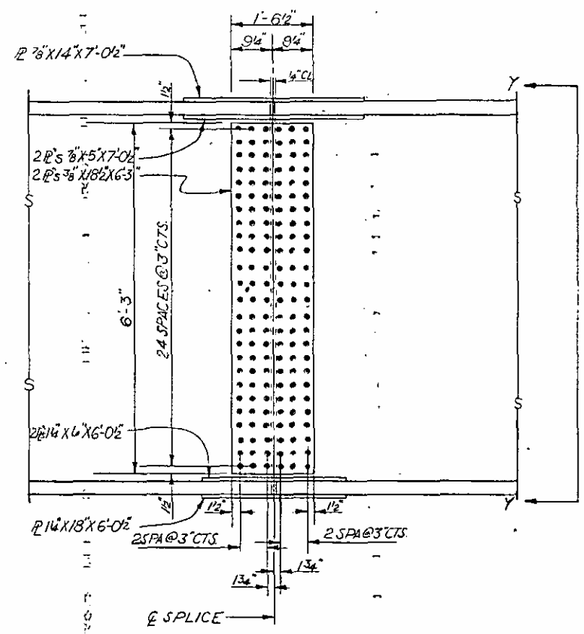

WEB SPLICE

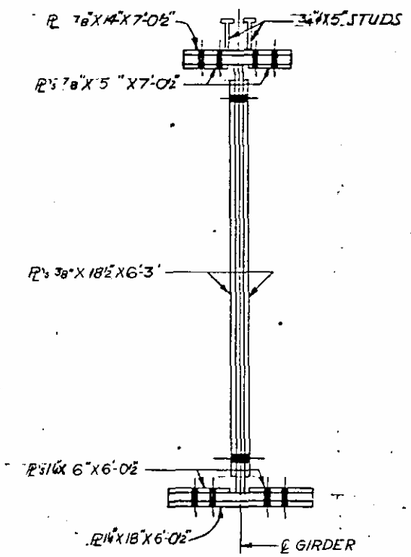

SECTION Y-Y

FIELD SPLICE DETAILS

PROJECT NO. 8.1531705
RANDOLPH-GUILFORD COUNTY
STATION: 590+49.33-L-ITLN

STATE OF NORTH CAROLINA
DEPARTMENT OF TRANSPORTATION AND HIGHWAY SAFETY
RALEIGH

SUPERSTRUCTURE
STRUCTURAL STEEL DETAILS

REVISIONS						SHEET NO.
NO.	BY	DATE	NO.	BY	DATE	5-43
1	SKC	Oct 2, 79	3			TOTAL SHEETS
2			4			122

Rev #1 Change rows of bolts and spaces in splice plate

DRAWN BY	K. CRAIG	DATE	10-78
CHECKED BY	W.S.T.	DATE	DEC. 78

FED. ROAD DIV. NO.	STATE	PROJECT NO.
4	N. C.	
F. A. PROJECT		

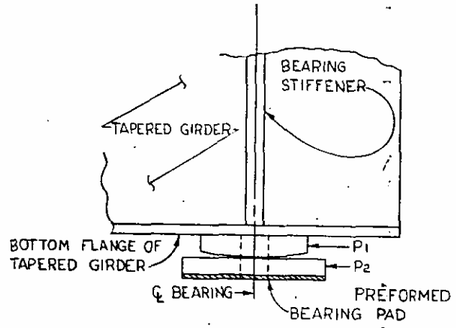

FIXED BEARING
SPANS "A" & "D"

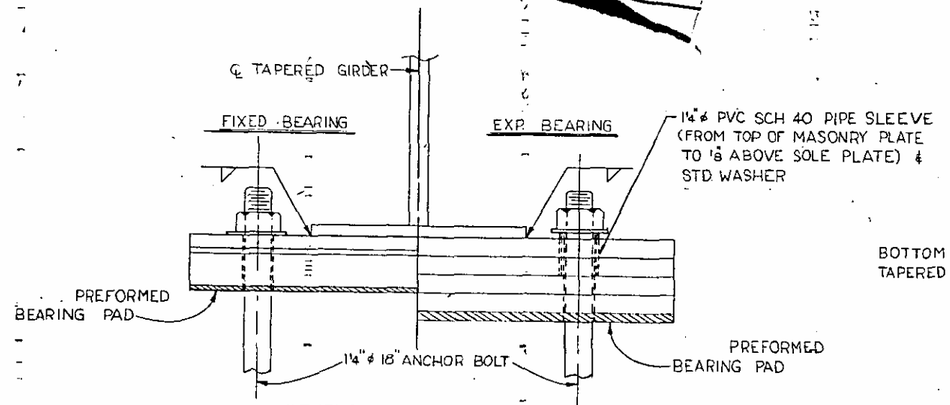

SECTION THRU BEARING
SPANS "A" & "D"

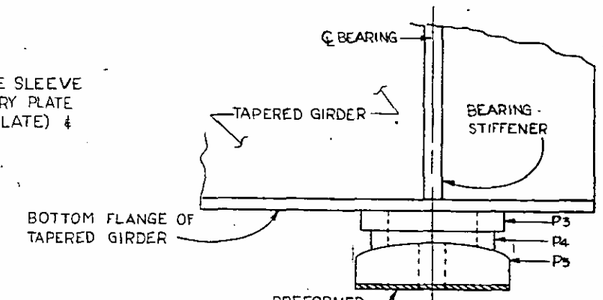

EXPANSION BEARING
SPANS "A" & "D"

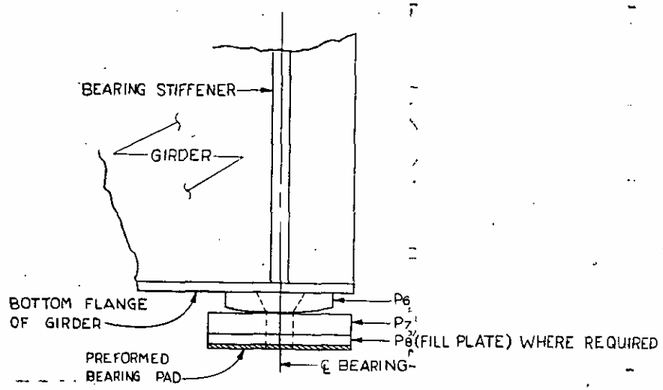

FIXED BEARING
SPANS "B" & "C"

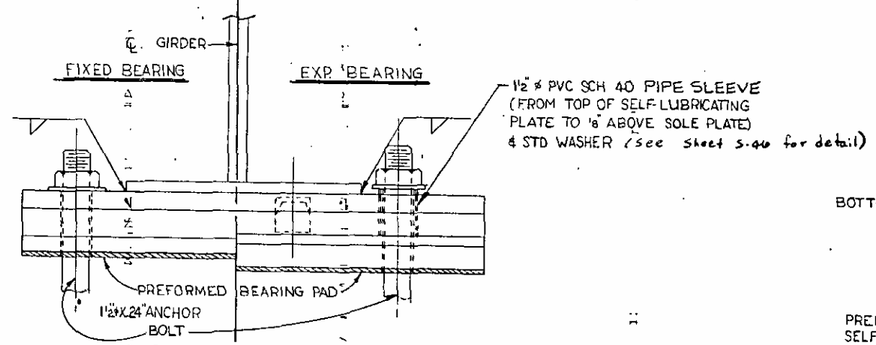

SECTION THRU BEARING
SPANS "B" & "C"

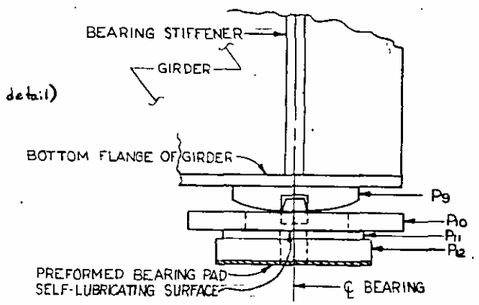

EXPANSION BEARING
SPANS "B" & "C"

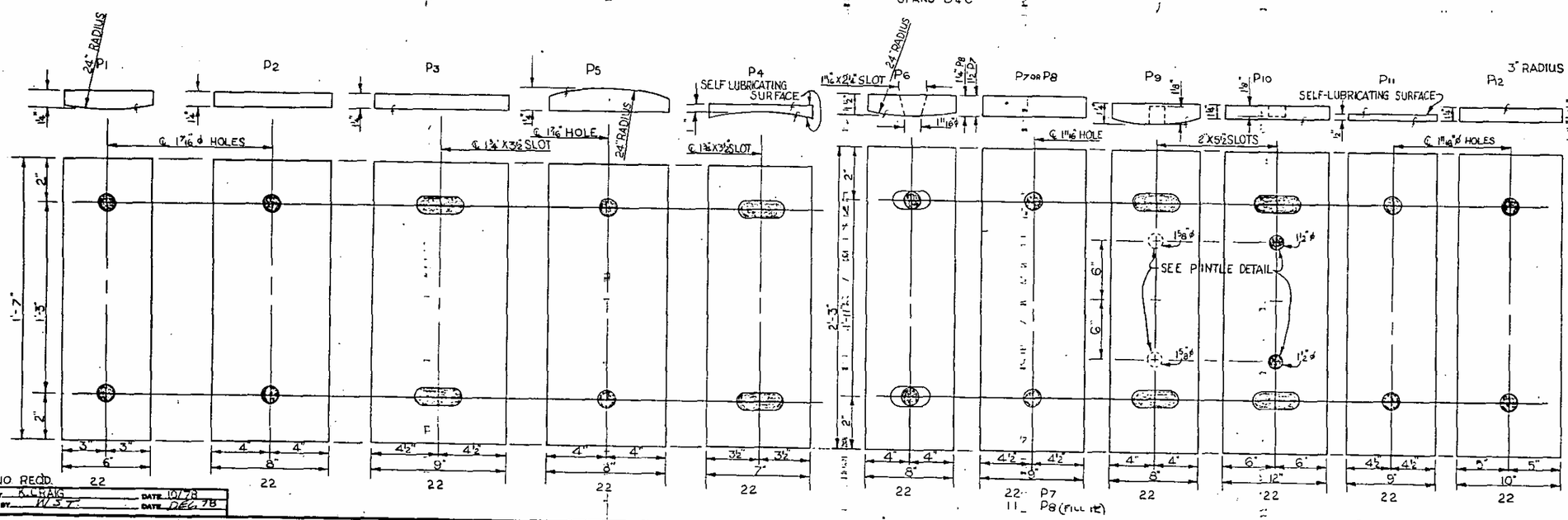

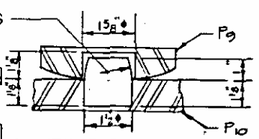

PINTLE DETAIL

Per #1 Change sheet use on P8 & P6 to 1¾" SLC — B.M.W.

PROJECT No. 8.1531705
RANDOLPH-GUILFORD **COUNTY**
STATION: 530+49.33-L-LT LN

STATE OF NORTH CAROLINA
DEPARTMENT OF TRANSPORTATION AND HIGHWAY SAFETY
RALEIGH

SUPERSTRUCTURE

STRUCTURAL STEEL DETAILS

REVISIONS								SHEET NO.
NO.	BY	DATE	NO.	BY	DATE			S-44
1	SLC	Oct 2 '79	3					TOTAL SHEETS
2			4					122

DRAWN BY: K. L. HAIG DATE: 10/78
CHECKED BY: W.S.T. DATE: DEC. 78

FED. ROAD DIV. NO.	STATE	PROJECT NO.
4	N.C.	
F. A. PROJECT		

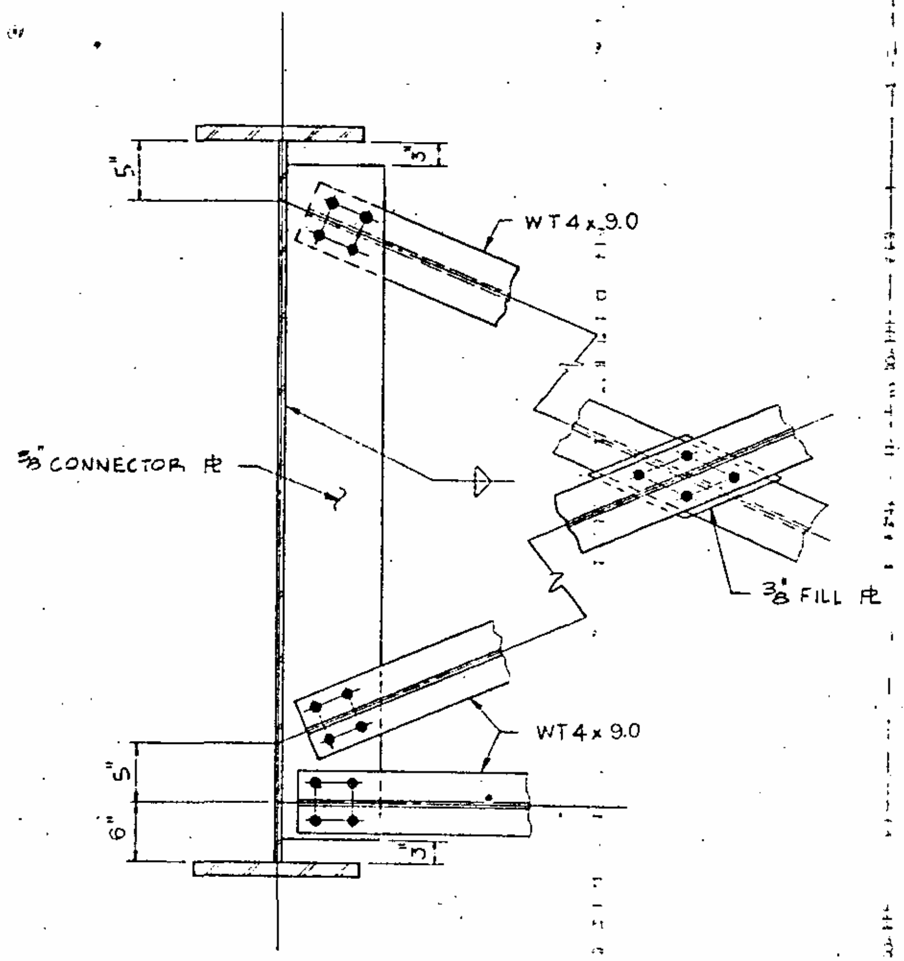

INTERMEDIATE DIAPHRAGM (D3)
WITHOUT WIND-BRACE

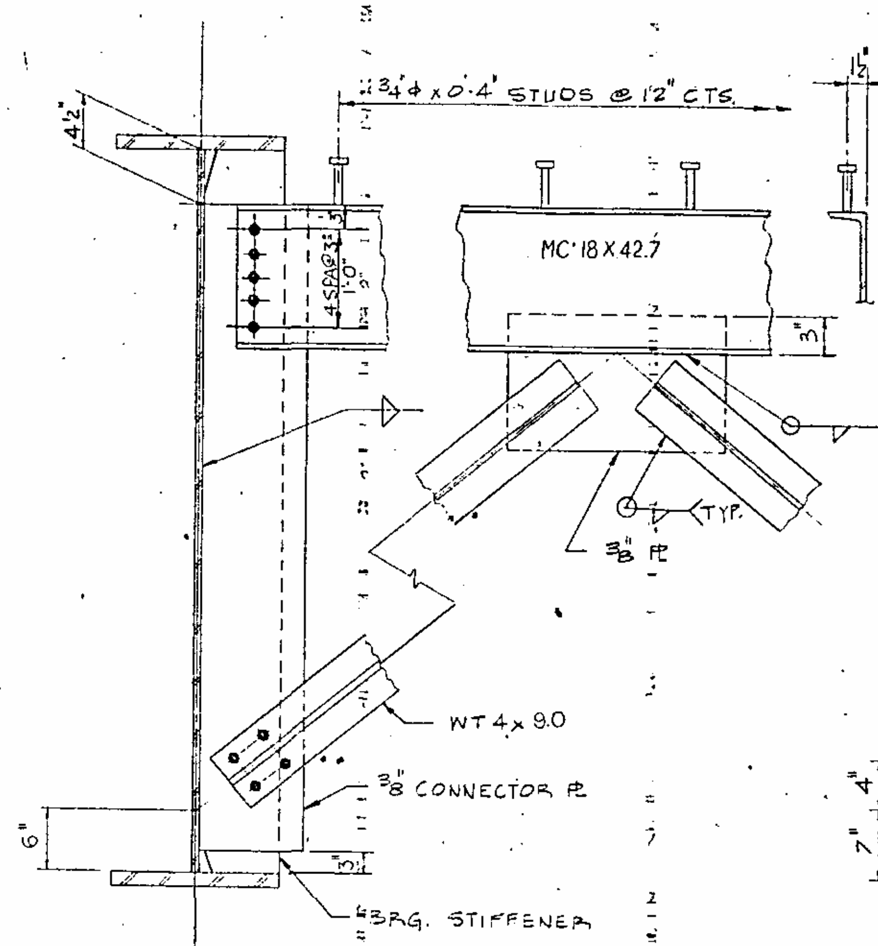

BENT DIAPHRAGM (D2)
WITHOUT WIND-BRACE

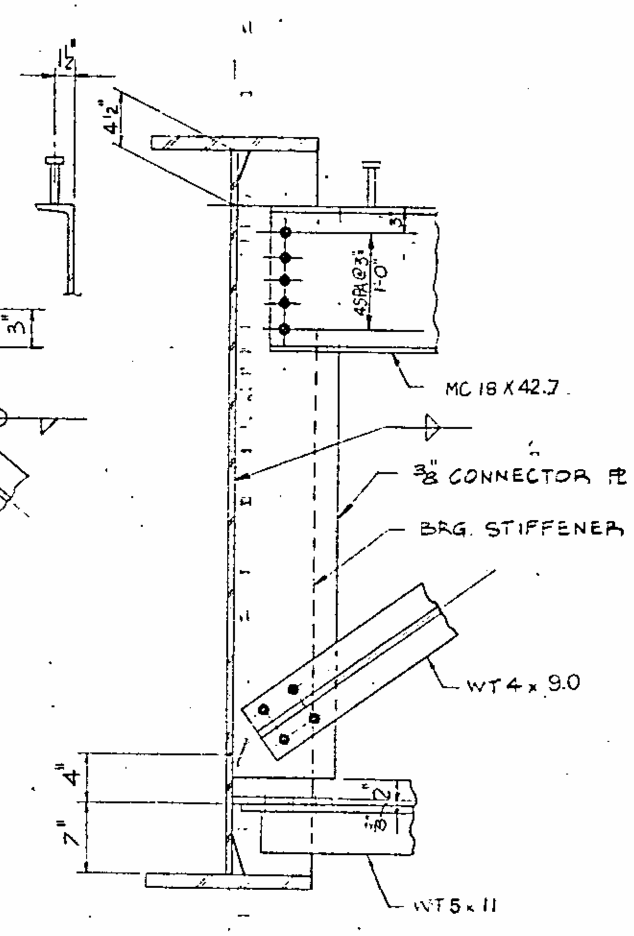

BENT DIAPHRAGM (D1)
WITH WIND-BRACE

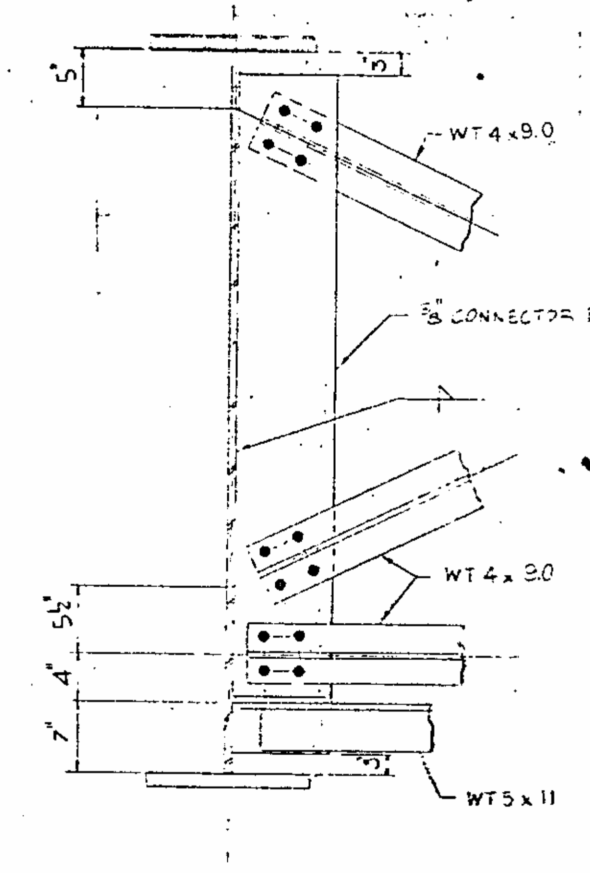

INTERMEDIATE DIAPHRAGM (D4)
WITH WIND-BRACE

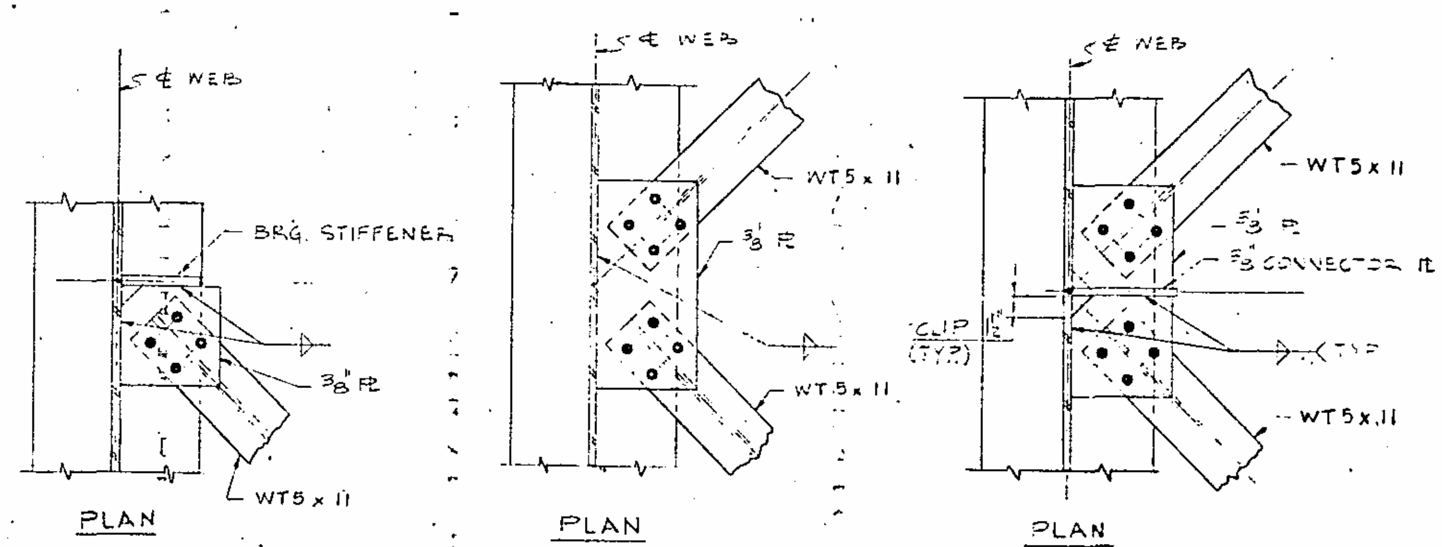

DETAILS OF WIND-BRACE CONNECTIONS

PROJECT NO. 8.1531705
RANDOLPH-GUILFORD COUNTY
STATION: 530+43.33-L-LTLN

STATE OF NORTH CAROLINA
DEPARTMENT OF TRANSPORTATION AND HIGHWAY SAFETY
RALEIGH

— SUPERSTRUCTURE —
STRUCTURAL STEEL DETAILS

REVISIONS							SHEET NO.
NO.	BY	DATE	NO.	BY	DATE		S-45
1			3				
2			4				

DRAWN BY THAMES DATE AUG. 74
CHECKED BY W.S.T. DATE DEC. 78

FED. ROAD DIV. NO.	STATE
4	N. C.
F. A. PROJECT	

DEAD LOAD DEFLECTION TABLE FOR GIRDERS	SPAN A		SPAN D	
	EXT.	INT.	EXT.	INT.
DEFLECTION DUE TO WEIGHT OF BEAM	.001	.001	.000	.000
DEFLECTION DUE TO WEIGHT OF SLAB	.006	.007	.012	.014
DEFLECTION DUE TO WEIGHT OF BARRIER RAIL, AND FUTURE WEARING SURFACE	.000	.000	.000	.000
TOTAL DEAD LOAD DEFLECTION	.007	.008	.012	.014
VERTICAL CURVE ORDINATE	.003	.003	.002	.002
~~ORDINATE DUE TO SUPERELEVATION~~				
BEAM CAMBER	*.010	*.011	*.014	*.016

*NO SHOP CAMBER REQ'D

NOTE: DEFLECTIONS ARE GIVEN IN DECIMALS OF A FOOT.

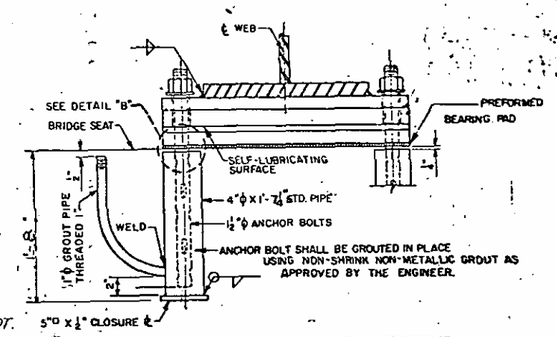

PIPE SLEEVE DETAIL

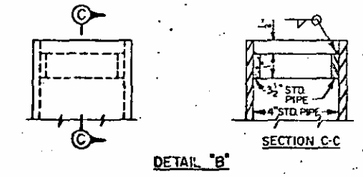

DETAIL "B"

SECTION C-C

DEAD LOAD DEFLECTION TABLE FOR GIRDERS	SPAN B & SPAN C																		
	EXTERIOR									INTERIOR									
TENTH POINT	.1	.2	.3	.4	.5	.6	.7	.8	.9	.1	.2	.3	.4	.5	.6	.7	.8	.9
DEFLECTION DUE TO WEIGHT OF BEAM	.048	.089	.119	.138	.145	.138	.119	.089	.048	.050	.092	.124	.143	.150	.143	.124	.092	.050
DEFLECTION DUE TO WEIGHT OF SLAB	.098	.181	.242	.281	.295	.281	.242	.181	.098	.126	.231	.310	.360	.377	.360	.310	.231	.126
DEFLECTION DUE TO WEIGHT OF BARRIER RAIL, AND FUTURE WEARING SURFACE	.026	.048	.065	.076	.079	.076	.065	.048	.026	.023	.043	.058	.068	.072	.068	.058	.043	.023
TOTAL DEAD LOAD DEFLECTION	.172	.318	.426	.495	.519	.495	.426	.318	.172	.199	.366	.492	.571	.599	.571	.492	.366	.199
VERTICAL CURVE ORDINATE	.018	.032	.041	.048	.050	.048	.041	.032	.018	.018	.032	.041	.048	.050	.048	.041	.032	.018
~~ORDINATE DUE TO SUPERELEVATION~~																		
REQUIRED BEAM CAMBER	.190	.350	.467	.543	.569	.543	.467	.350	.190	.217	.398	.533	.619	.649	.619	.533	.398	.217

DEAD LOAD DEFLECTION TABLE FOR GIRDERS	SPAN C																	
	EXTERIOR									INTERIOR								
TENTH POINT	.1	.2	.3	.4	.5	.6	.7	.8	.9	.1	.2	.3	.4	.5	.6	.7	.8	.9
DEFLECTION DUE TO WEIGHT OF BEAM																		
DEFLECTION DUE TO WEIGHT OF SLAB																		
DEFLECTION DUE TO WEIGHT OF PARAPET, RAIL, AND FUTURE WEARING SURFACE																		
TOTAL DEAD LOAD DEFLECTION																		
VERTICAL CURVE ORDINATE																		
ORDINATE DUE TO SUPERELEVATION																		
REQUIRED BEAM CAMBER																		

--- NOTES ---

SPECIFICATIONS : DESIGN--- AASHTO (1978)

- ALL STRUCTURAL STEEL FOR THIS STRUCTURE SHALL BE UNPAINTED ASTM A588 STEEL WITH A MINIMUM YIELD STRENGTH OF 50,000 PSI UNLESS OTHERWISE NOTED ON THE PLANS.
- NO WEB SPLICE OTHER THAN THOSE SHOWN ON THE PLANS SHALL BE PERMITTED.
- AT THE CONTRACTOR'S OPTION, FILL PLATES MAY BE COMBINED WITH MASONRY PLATES.
- AT FIXED POINTS OF SUPPORT, NUTS FOR ANCHOR BOLTS ARE TO BE TIGHTENED FINGER TIGHT AND THEN BACKED OFF 1/2 TURN. THE THREAD OF THE NUT AND BOLT SHALL THEN BE BURRED WITH A SHARP POINTED TOOL.
- CLIP THE CORNERS OF THE STIFFENER PLATES AT THE JUNCTIONS OF THE WEB AND FLANGES.
- ALL FIELD CONNECTIONS TO BE 7/8" DIA. HIGH STRENGTH BOLTS UNLESS OTHERWISE NOTED.
- BEARING PLATE ASSEMBLIES EXCEPT SELF-LUBRICATING PLATES SHALL BE GALVANIZED.
- ANCHOR BOLTS, AND NUTS SHALL BE IN ACCORDANCE WITH THE STANDARD SPECIFICATIONS. FOR WASHERS, SEE SPECIAL PROVISIONS.
- CAMBERED GIRDER LENGTHS SHALL BE ADJUSTED AND BEARINGS ARE TO BE PLACED ON THE CAMBERED GIRDER SO AS TO BE ALIGNED WITH THE ANCHORS AFTER THE DEAD LOAD DEFLECTION HAS OCCURRED. SHOP PLANS SHALL BE PREPARED ACCORDINGLY.
- ALL BEARING PLATES SHALL BE ASTM A588 OR A572 GR. 50.
- THE 1 1/4" DIA. (OR 1 1/2" DIA.) PIPE SLEEVE SHALL BE CUT FROM SCHEDULE 40 PVC PIPE. THE PVC PIPE SHALL MEET THE REQUIREMENT OF ASTM D1785. THE PAYMENT FOR THE PIPE SLEEVES SHALL BE INCLUDED IN THE SEVERAL PAY ITEMS.
- A CHARPY V-NOTCH TEST IS REQUIRED FOR WEB PLATES, BOTTOM FLANGE PLATES, BOTTOM FLANGE SPLICE PLATES, AND WEB SPLICE PLATES FOR ALL GIRDERS. FOR CHARPY V-NOTCH TEST FOR GIRDERS, SEE SPECIAL PROVISIONS.
- PREVIOUSLY CAST CONCRETE IN A GIVEN SPAN SHALL HAVE ATTAINED A MINIMUM COMPRESSIVE STRENGTH OF 3000 PSI BEFORE ADDITIONAL CONCRETE IS CAST IN THE SPAN.
- CONCRETE BARRIER RAIL IN A GIVEN SPAN SHALL NOT BE CAST UNTIL ALL SLAB CONCRETE IN THE SPAN HAS BEEN CAST AND REACHED A MINIMUM COMPRESSIVE STRENGTH OF 3000 PSI.
- FOR SELF-LUBRICATING PLATES, SEE SPECIAL PROVISIONS.

PROJECT NO. 8.1531705

RANDOLPH-GUILFORD COUNTY

STATION: 3801.4933-L-LT LN

STATE OF NORTH CAROLINA
DEPARTMENT OF TRANSPORTATION
RALEIGH

SUPERSTRUCTURE
BEAM CAMBER

REVISIONS						SHEET NO.
NO.	BY	DATE	NO.	BY	DATE	S-4.2
1			3			TOTAL SHEETS
2			4			122

DRAWN BY K. CRAIG DATE 10/24
CHECKED BY W.S.T. DATE DEC. 78

FED. ROAD DIV. NO.	STATE	PROJECT NO.
4	N. C.	
F. A. PROJECT		

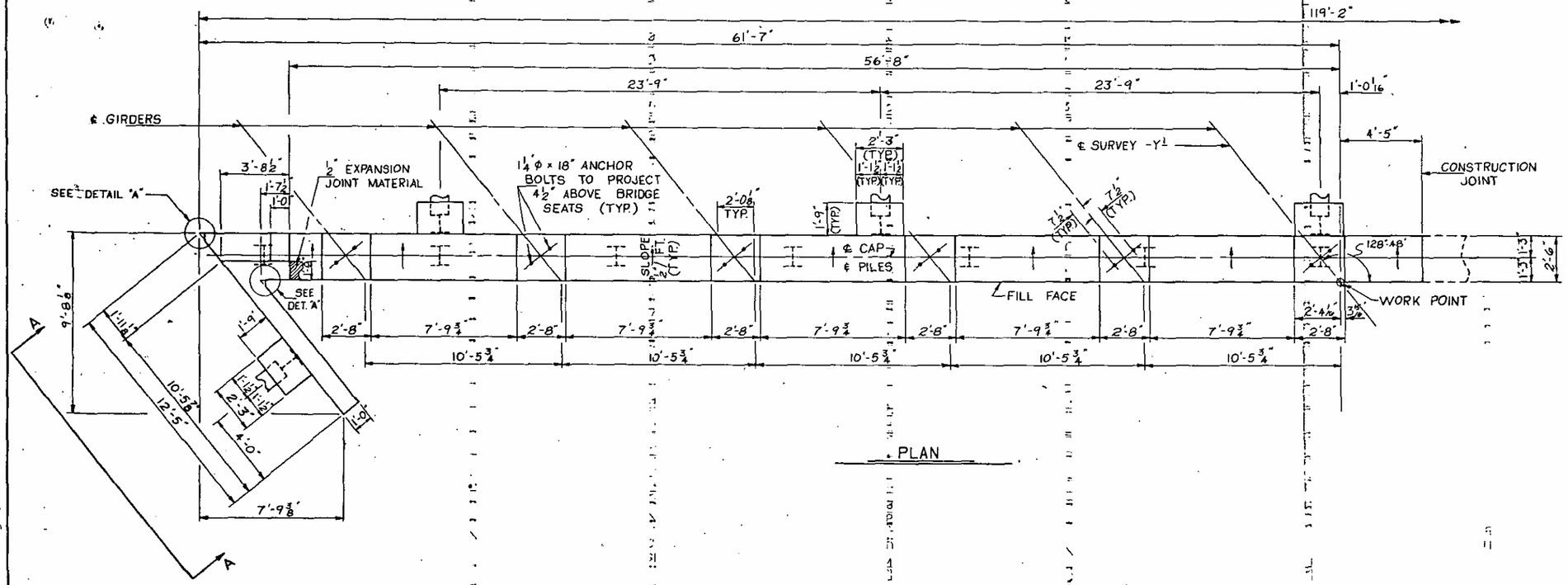

PLAN

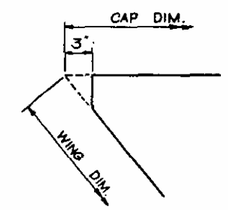

DETAIL "A"

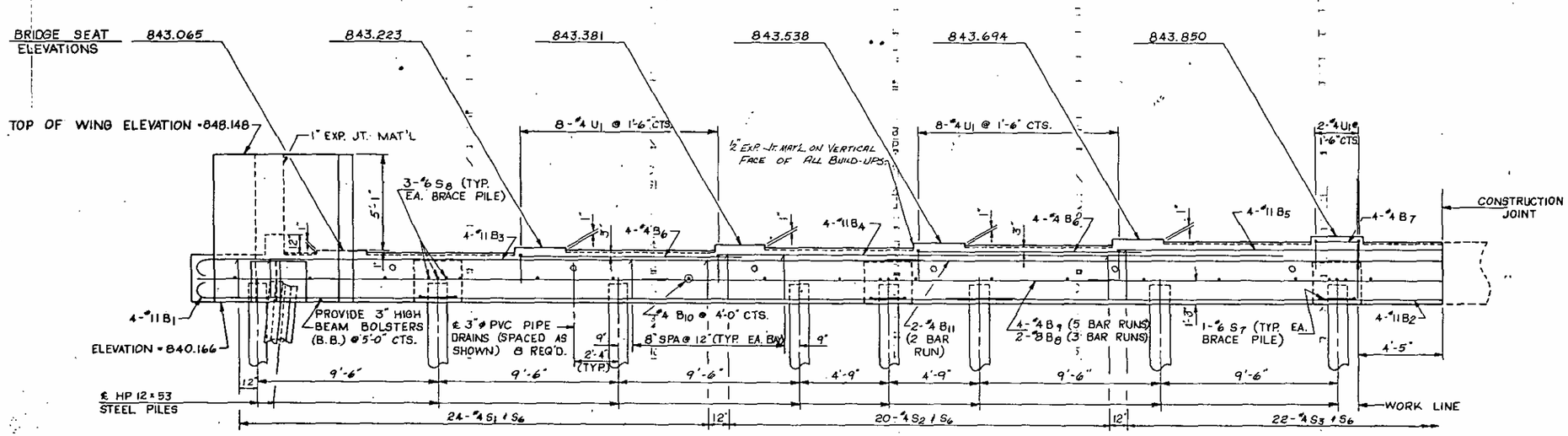

ELEVATION

PROJECT NO. 8.1531705

RANDOLPH - GUILFORD COUNTY

STATION: 590+49.33 -L- LT. LN.

SHEET 1 OF 3.

STATE OF NORTH CAROLINA
DEPARTMENT OF TRANSPORTATION AND HIGHWAY SAFETY
RALEIGH

SUBSTRUCTURE
END BENT NO. 1

SEPT. 1978

REVISIONS						SHEET NO.
NO.	BY	DATE	NO.	BY	DATE	S-47
1			3			TOTAL SHEETS
2			4			122

DRAWN BY Rodney R. Gusler DATE 9-28-78
CHECKED BY W. C. Nelson DATE 12-78

FED. ROAD DIV. NO.	STATE	PROJECT NO.
4	N. C.	
F. A. PROJECT		

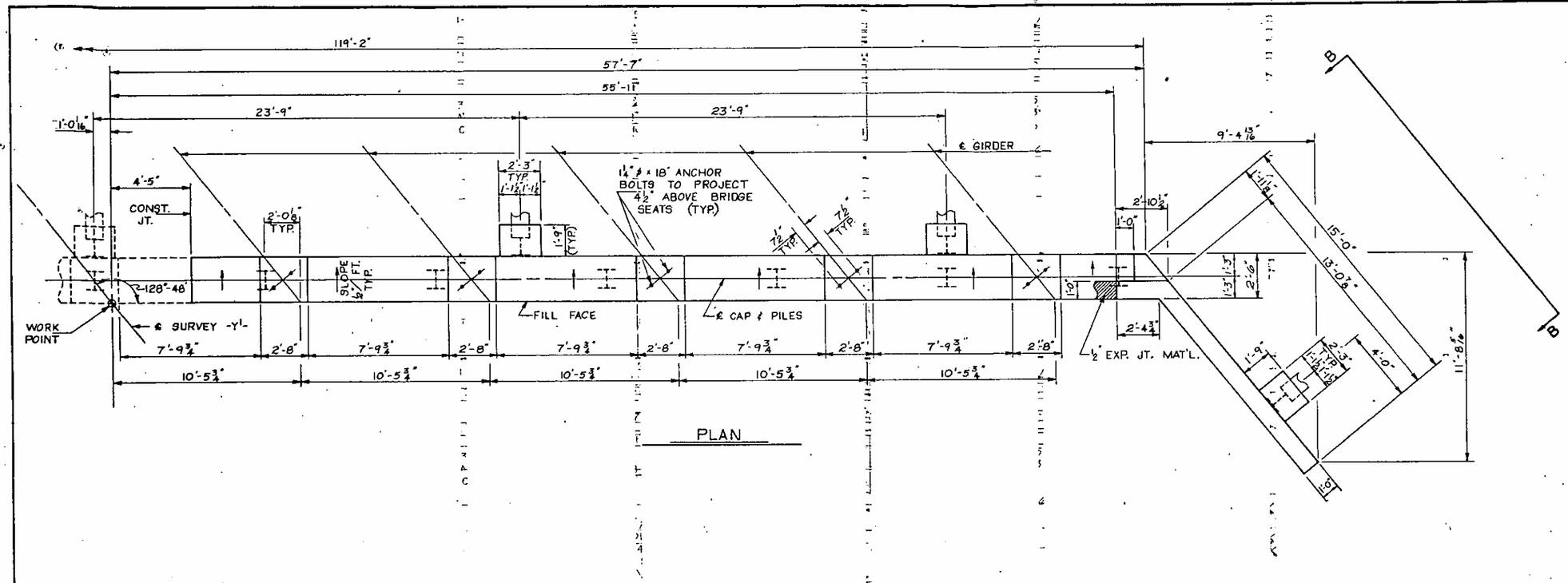

PLAN

NOTE: THE TOP SURFACE AREAS OF THE CAP SHALL BE CURED IN ACCORDANCE WITH THE STANDARD SPECIFICATIONS EXCEPT THE MEMBRANE CURING COMPOUND METHOD SHALL NOT BE USED.

THE EPOXY PROTECTIVE COATING SHALL BE APPLIED TO THE TOP SURFACE AREA, INCLUDING CHAMFER AREA, OF THE CAP.

FOR EPOXY PROTECTIVE COATING, SEE SPECIAL PROVISIONS.

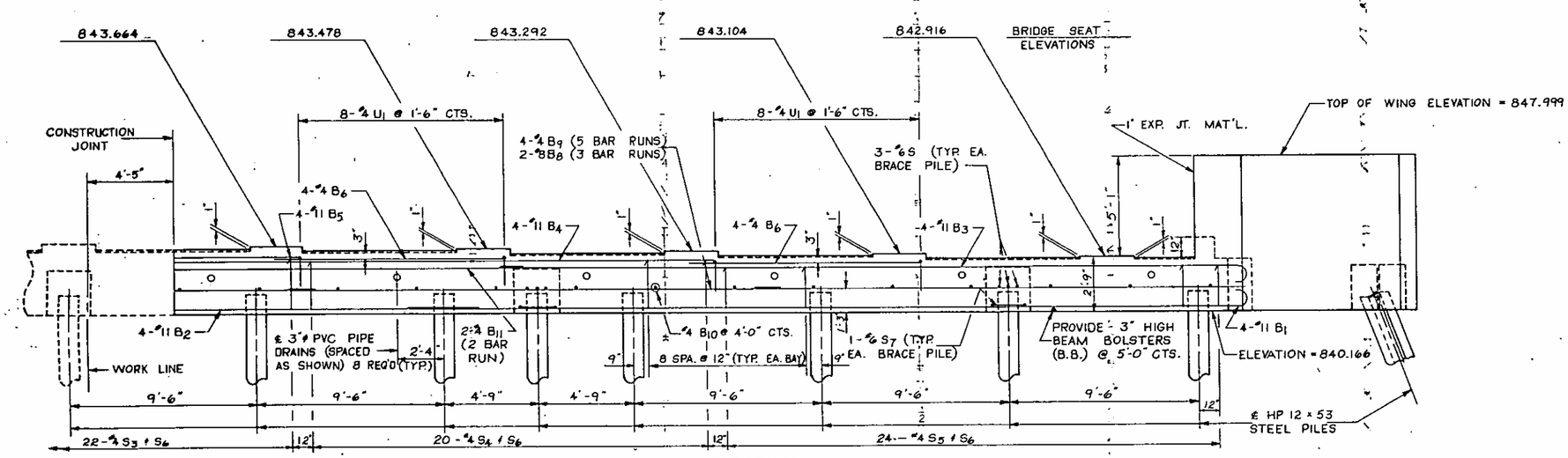

ELEVATION

PROJECT NO. 8.1531705

RANDOLPH - GUILFORD COUNTY

STATION: 590+49.33 -L- LT. LN.

SHEET 2 OF 3.

STATE OF NORTH CAROLINA

DEPARTMENT OF TRANSPORTATION AND HIGHWAY SAFETY

RALEIGH

SUBSTRUCTURE

END BENT NO. 1

OCT. 1978

REVISIONS						SHEET NO.
NO.	BY	DATE	NO.	BY	DATE	S-48
1			3			TOTAL SHEETS
2			4			122

DRAWN BY R. R. Geisler DATE 10-4-78

CHECKED BY J. C. Harper DATE 12-78

FED. ROAD DIV. NO.	STATE	PROJECT NO.
4	N. C.	
F. A. PROJECT		

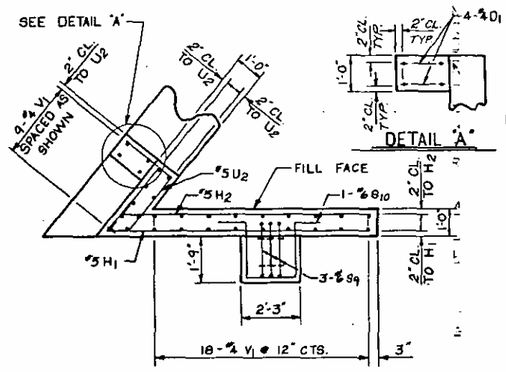

PLAN A-A

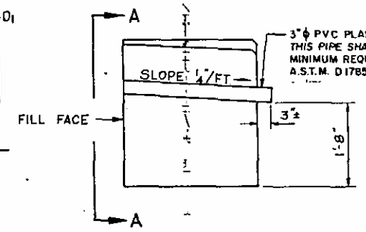

SECTION THRU CAP

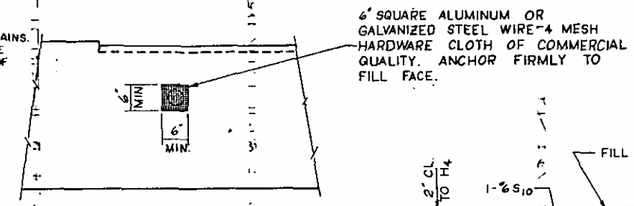

VIEW A-A

PIPE DRAIN DETAILS

NOTE: NO SEPARATE PAYMENT WILL BE MADE FOR FURNISHING AND INSTALLING THE PVC PLASTIC PIPE DRAINS, HARDWARE CLOTH AND FASTENERS. THE ENTIRE COST OF THIS WORK SHALL BE INCLUDED IN THE UNIT CONTRACT PRICE BID FOR THE SEVERAL PAY ITEMS.

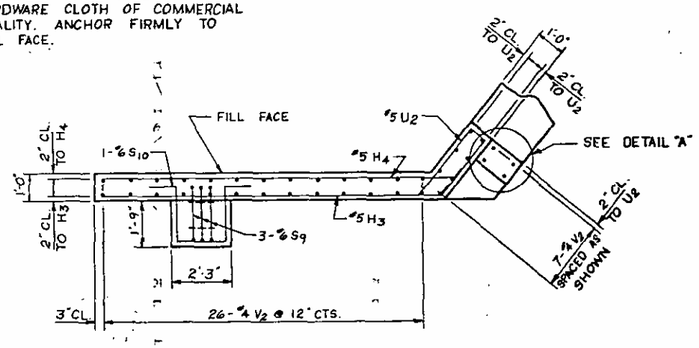

PLAN B-B

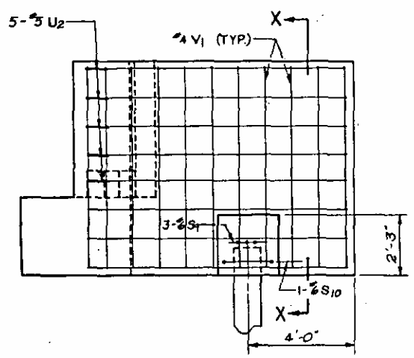

ELEVATION A-A

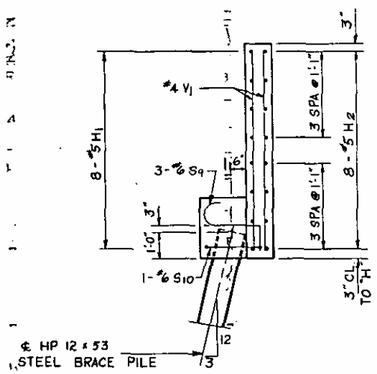

SECTION X-X

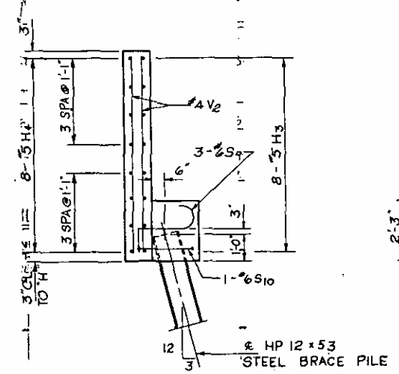

SECTION Y-Y

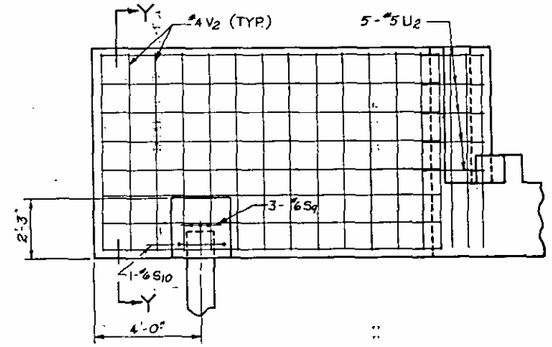

ELEVATION B-B

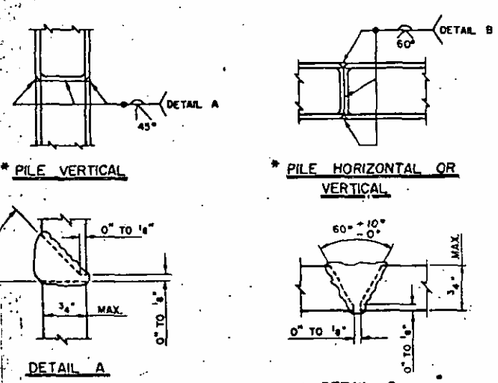

PILE SPLICE DETAILS

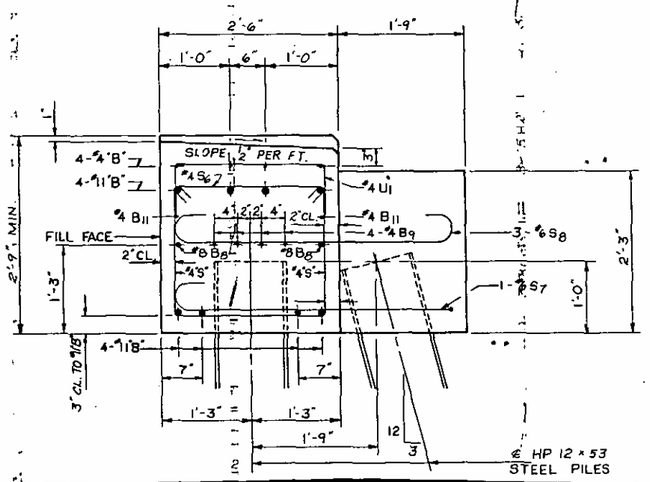

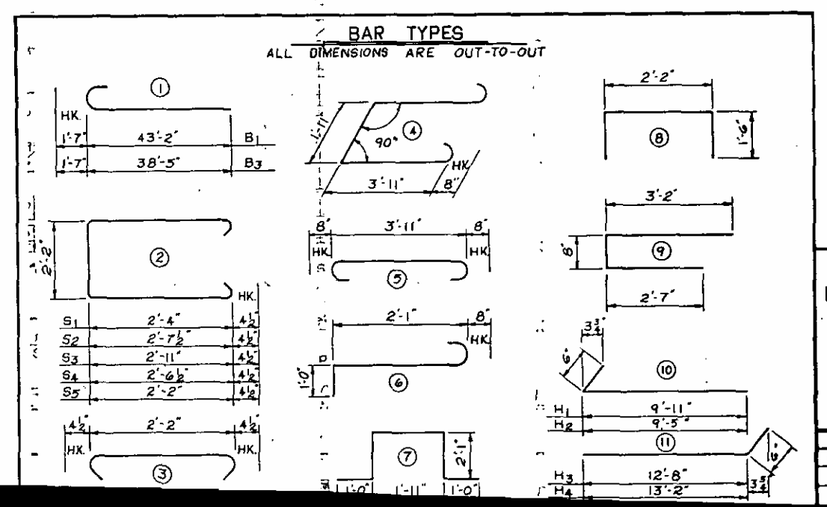

BILL OF MATERIAL

END BENT #1

BAR	NO.	SIZE	TYPE	LENGTH	WEIGHT
B1	8	#11	1	44'-9"	1,902
B2	4	#11	STR.	41'-6"	882
B3	8	#11	1	40'-0"	1,700
B4	8	#11	STR.	29'-8"	1,261
B5	4	#11	STR.	23'-3"	494
B6	16	#4	STR.	11'-9"	126
B7	4	#4	STR.	2'-4"	6
B8	6	#8	STR.	41'-4"	662
B9	20	#4	STR.	24'-9"	331
B10	30	#4	STR.	2'-2"	43
B11	8	#4	STR.	23'-11"	128
D1	8	#4	STR.	2'-0"	11
H1	8	#5	10	10'-5"	87
H2	8	#5	10	9'-11"	83
H3	8	#5	11	13'-2"	110
H4	8	#5	11	13'-8"	114
S1	24	#4	2	7'-7"	122
S2	20	#4	2	8'-2"	109
S3	22	#4	2	8'-9"	129
S4	20	#4	2	8'-0"	107
S5	24	#4	2	7'-3"	116
S6	110	#4	3	2'-11"	214
S7	5	#6	4	11'-1"	83
S8	15	#6	5	5'-3"	118
S9	6	#6	6	3'-9"	34
S10	2	#6	7	8'-1"	24
U1	34	#4	8	5'-2"	117
U2	10	#5	9	6'-5"	67
V1	27	#4	STR.	7'-7"	137
V2	33	#4	STR.	7'-6"	165

REINFORCING STEEL — 9,482 LBS.
CLASS "A" CONCRETE — 43.4 CU. YD.
HP 12 x 53 STEEL PILES
NO. = 20 LIN. FT. = 400

CONCRETE BREAKDOWN (CU. YDS.)
LEFT SIDE 23.4
RIGHT SIDE 20.0

PROJECT NO. 8.1531705
RANDOLPH - GUILFORD COUNTY
STATION: 590+49.33 -L- LT. LN
SHEET 3 OF 3

STATE OF NORTH CAROLINA
DEPARTMENT OF TRANSPORTATION AND HIGHWAY SAFETY
RALEIGH

SUBSTRUCTURE
END BENT NO. 1
DETAILS

OCT. 1978

REVISIONS						SHEET NO.
NO.	BY	DATE	NO.	BY	DATE	5-49
1			3			TOTAL SHEETS
2			4			122

DRAWN BY R. R. Guerke DATE 10-10-78

SECTION THRU CAP

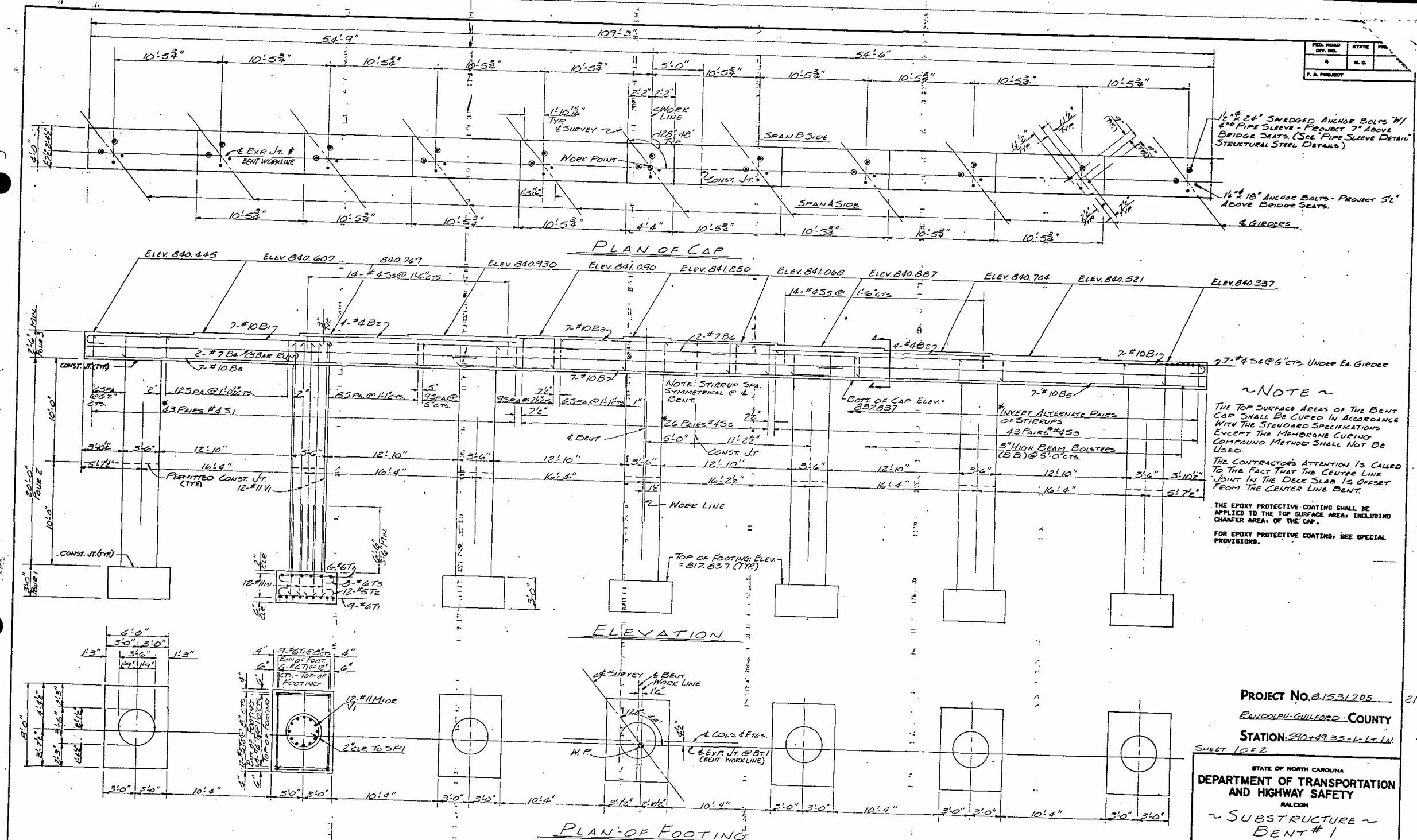

~NOTE~

THE TOP SURFACE AREAS OF THE BENT CAP SHALL BE CURED IN ACCORDANCE WITH THE STANDARD SPECIFICATIONS EXCEPT THE MEMBRANE CURING COMPOUND METHOD SHALL NOT BE USED.

THE CONTRACTOR'S ATTENTION IS CALLED TO THE FACT THAT THE CENTER LINE JOINT IN THE DECK SLAB IS OFFSET FROM THE CENTER LINE BENT.

THE EPOXY PROTECTIVE COATING SHALL BE APPLIED TO THE TOP SURFACE AREA, INCLUDING CHAMFER AREA, OF THE CAP.

FOR EPOXY PROTECTIVE COATING, SEE SPECIAL PROVISIONS.

FED. ROAD DIV. NO.	STATE	PROJECT
4	N. C.	
F. A. PROJECT		

PROJECT NO. 8.1531705 21

RANDOLPH-GUILFORD COUNTY

STATION: 590+49.33 - L - LT. LN.

SHEET 1 OF 2

STATE OF NORTH CAROLINA
DEPARTMENT OF TRANSPORTATION AND HIGHWAY SAFETY
RALEIGH

~SUBSTRUCTURE~
BENT #1

REVISIONS							SHEET NO.
NO.	BY	DATE	NO.	BY	DATE		S-50
1			3				TOTAL SHEETS
2			4				122

DRAWN BY J.C. HODGE DATE 10-78
CHECKED BY CHARLES POPE DATE 12-78

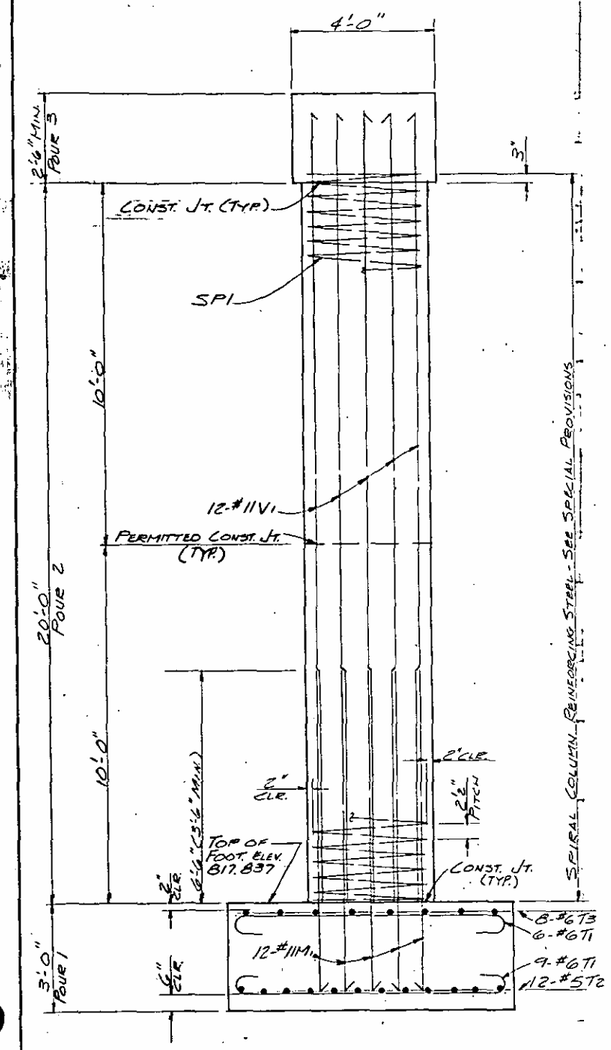

END ELEVATION

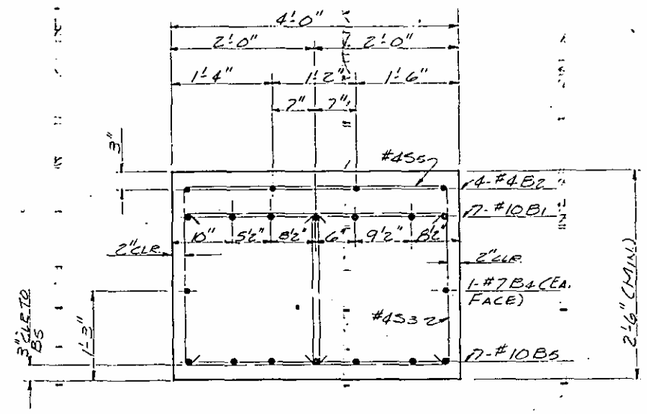

SECTION "A"-"A"

~ BAR TYPES ~

ALL BAR DIMENSIONS ARE OUT TO OUT.

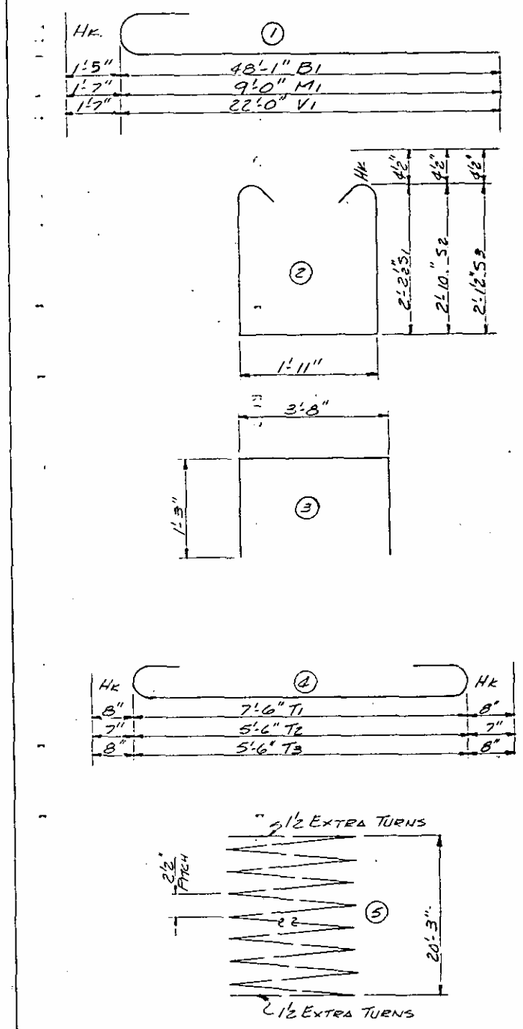

FED. ROAD DIV. NO.	STATE	PROJECT NO.
4	N. C.	
F. A. PROJECT		

BILL OF MATERIAL

FOR BENT 1

BAR	NO.	SIZE	TYPE	LENGTH	WEIGHT
B1	14	#10	1	49'-6"	2982
B2	6	#4	STR	21'-0"	112
B3	7	#10	1	24'-11"	751
B4	6	#7	1	35'-0"	466
B5	14	#10	1	39'-11"	2405
B6	2	#7	1	17'-7"	22
B7	7	#10	STR	35'-11"	1052
M1	84	#11	1	10'-7"	4223
S1	86	#4	2	7'-1"	407
S2	52	1	2	8'-4"	289
S3	86	1	2	6'-11"	397
S4	77	1	STR	3'-8"	189
S5	28	#4	3	6'-2"	115
T1	105	#6	4	8'-10"	1393
T2	84	#5	4	6'-8"	584
T3	56	#6	4	6'-10"	525
V1	84	#11	1	23'-7"	10585
TOTAL					27067
SP1	7		5	983'-11"	4601

SPIRAL COL. REINF. STEEL-LBS.-4601

REINFORCING STEEL-LBS.-27067

CLASS A CONC. ~ CU. YD'S.	
POUR 1-FOOTINGS ~	37.3
POUR 2-COL. ~	49.9
POUR 3 CAP ~	
LEFT	26.4
RIGHT	21.0
TOTAL	134.6

PROJECT NO. B-1551705

RANDOLPH-GUILFORD COUNTY

STATION: 590+49.33-L-LT. LN.

SHEET 2 OF 2

STATE OF NORTH CAROLINA
DEPARTMENT OF TRANSPORTATION AND HIGHWAY SAFETY
RALEIGH

~ SUBSTRUCTURE ~
BENT #1

REVISIONS							SHEET NO.
NO.	BY	DATE	NO.	BY	DATE		S-51
1			3				TOTAL SHEETS
2			4				122

DRAWN BY J.P. HOOPE DATE 12-78
CHECKED BY CHARLES POPE DATE 12-78

FED. ROAD DIV. NO.	STATE	PROJECT NO.
4	N. C.	
F. A. PROJECT		

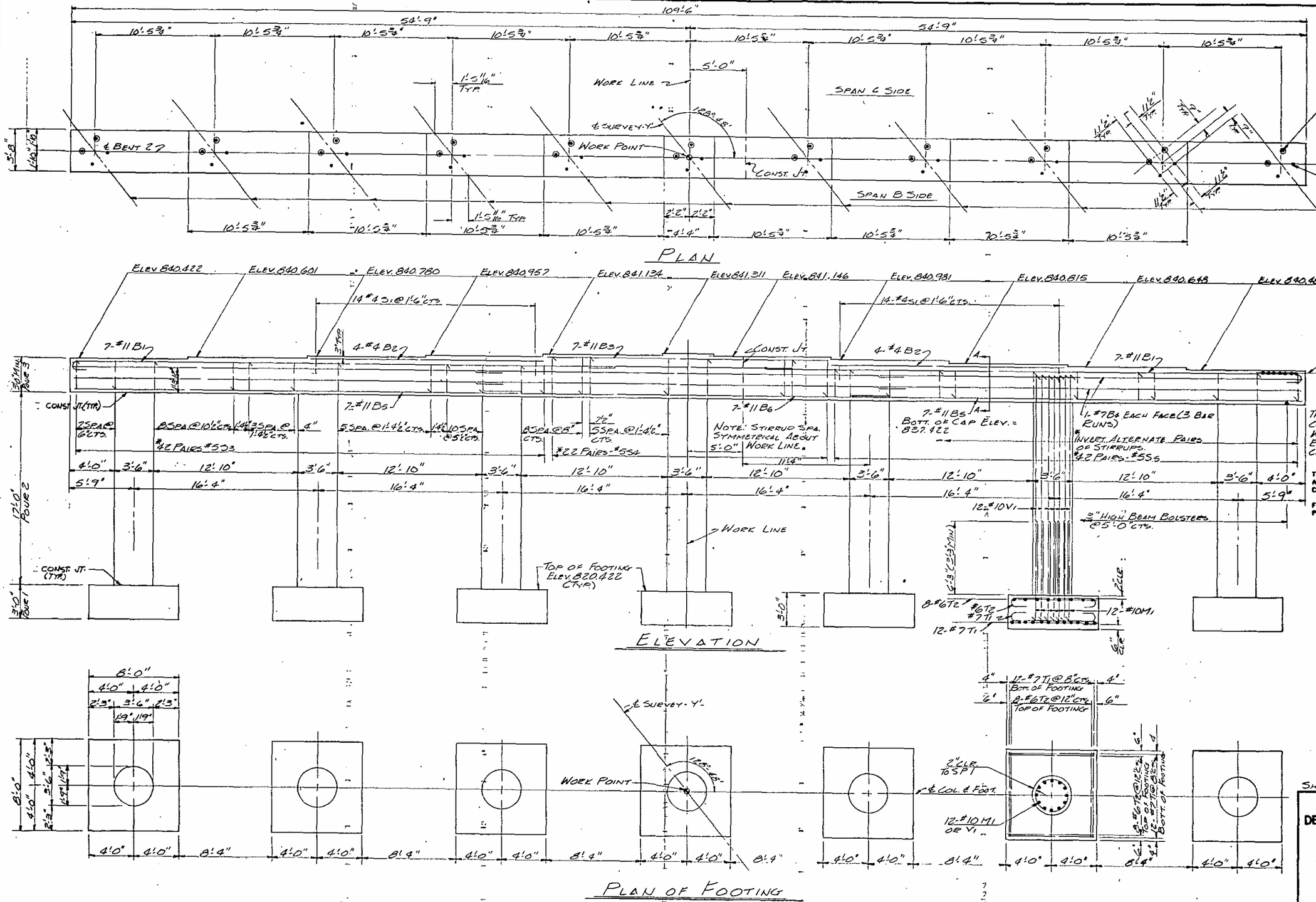

~ NOTE ~

THE TOP SURFACE AREAS OF THE BENT CAP SHALL BE CURED IN ACCORDANCE WITH THE STANDARD SPECIFICATIONS EXCEPT THE MEMBRANE CURING COMPOUND METHOD SHALL NOT BE USED.

THE EPOXY PROTECTIVE COATING SHALL BE APPLIED TO THE TOP SURFACE AREA, INCLUDING CHAMFER AREA, OF THE CAP.

FOR EPOXY PROTECTIVE COATING, SEE SPECIAL PROVISIONS.

PROJECT NO. B-1531205

RANDOLPH-GUILFORD COUNTY

STATION: 390+49.33-L-LT LN

SHEET 1 OF 2

STATE OF NORTH CAROLINA
DEPARTMENT OF TRANSPORTATION AND HIGHWAY SAFETY
RALEIGH

~ SUBSTRUCTURE ~
BENT #2

REVISIONS						
NO.	BY	DATE	NO.	BY	DATE	
1			3			
2			4			

SHEET NO. S-52
TOTAL SHEETS 122

DRAWN BY: J.C. HODGE DATE 10-78
CHECKED BY: CHARLES POPE DATE 12-78

21

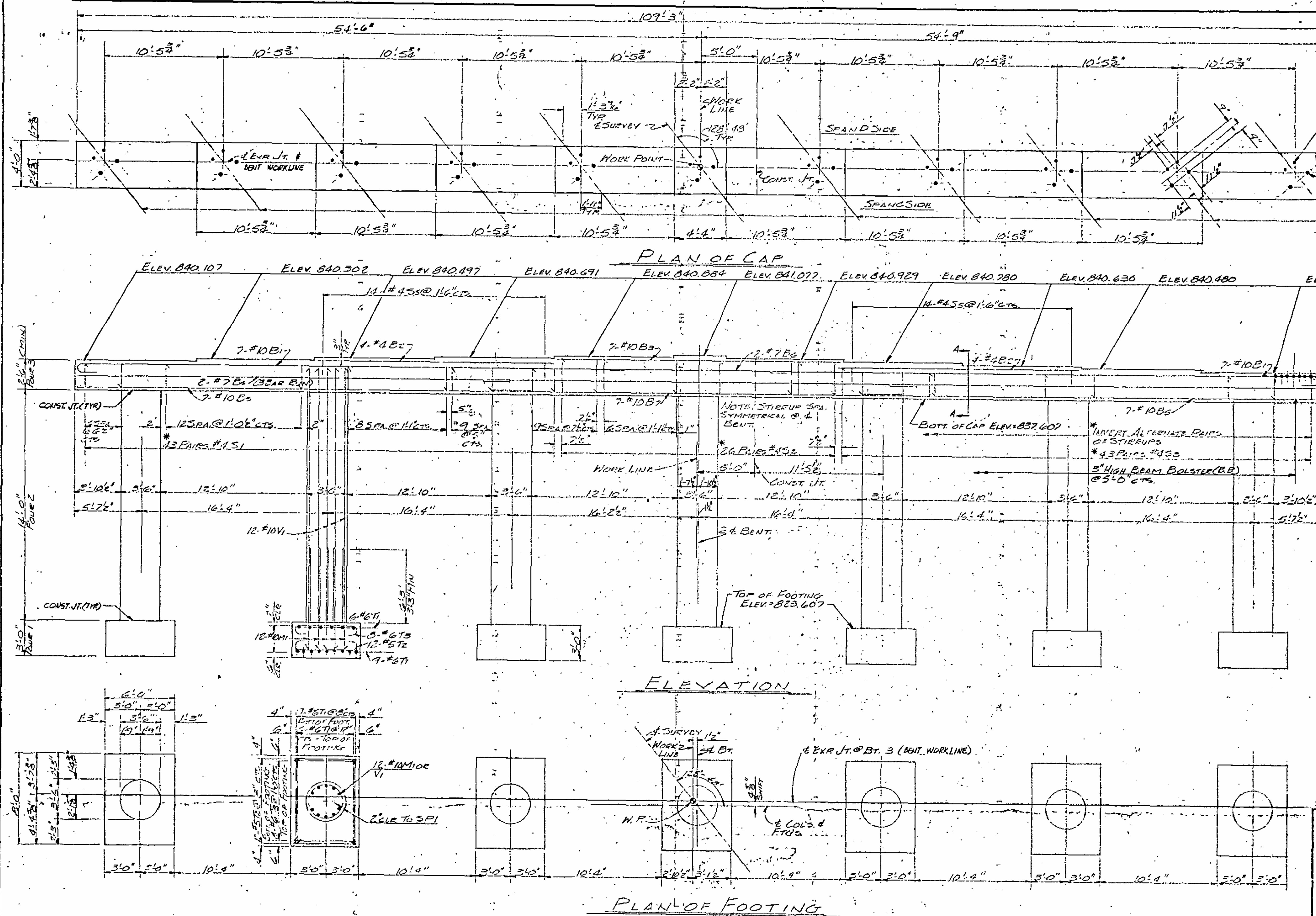

~ NOTE ~

The Top Surface Areas of The Bent Cap Shall Be Cured In Accordance With The Standard Specifications Except The Membrane Curing Compound Method Shall Not Be Used.

The Contractor's Attention Is Called To The Fact That The Center Line Joint In The Deck Slab Is Offset From The Center Line Bent.

THE EPOXY PROTECTIVE COATING SHALL BE APPLIED TO THE TOP SURFACE AREA, INCLUDING CHAMFER AREA, OF THE CAP.

FOR EPOXY PROTECTIVE COATING, SEE SPECIAL PROVISIONS.

PROJECT NO. 8.1531705

RANDOLPH-GUILFORD COUNTY

STATION:

Sheet 1 of 2

STATE OF NORTH CAROLINA
DEPARTMENT OF TRANSPORTATION
AND HIGHWAY SAFETY
RALEIGH

~ SUBSTRUCTURE ~
BENT # 3

REVISIONS								SHEET NO.
NO.	BY	DATE		NO.	BY	DATE		S-54
1				3				TOTAL SHEETS
2				4				122

DRAWN BY J.C. HODGE DATE 10-78
CHECKED BY CHARLES POPE DATE 12-78

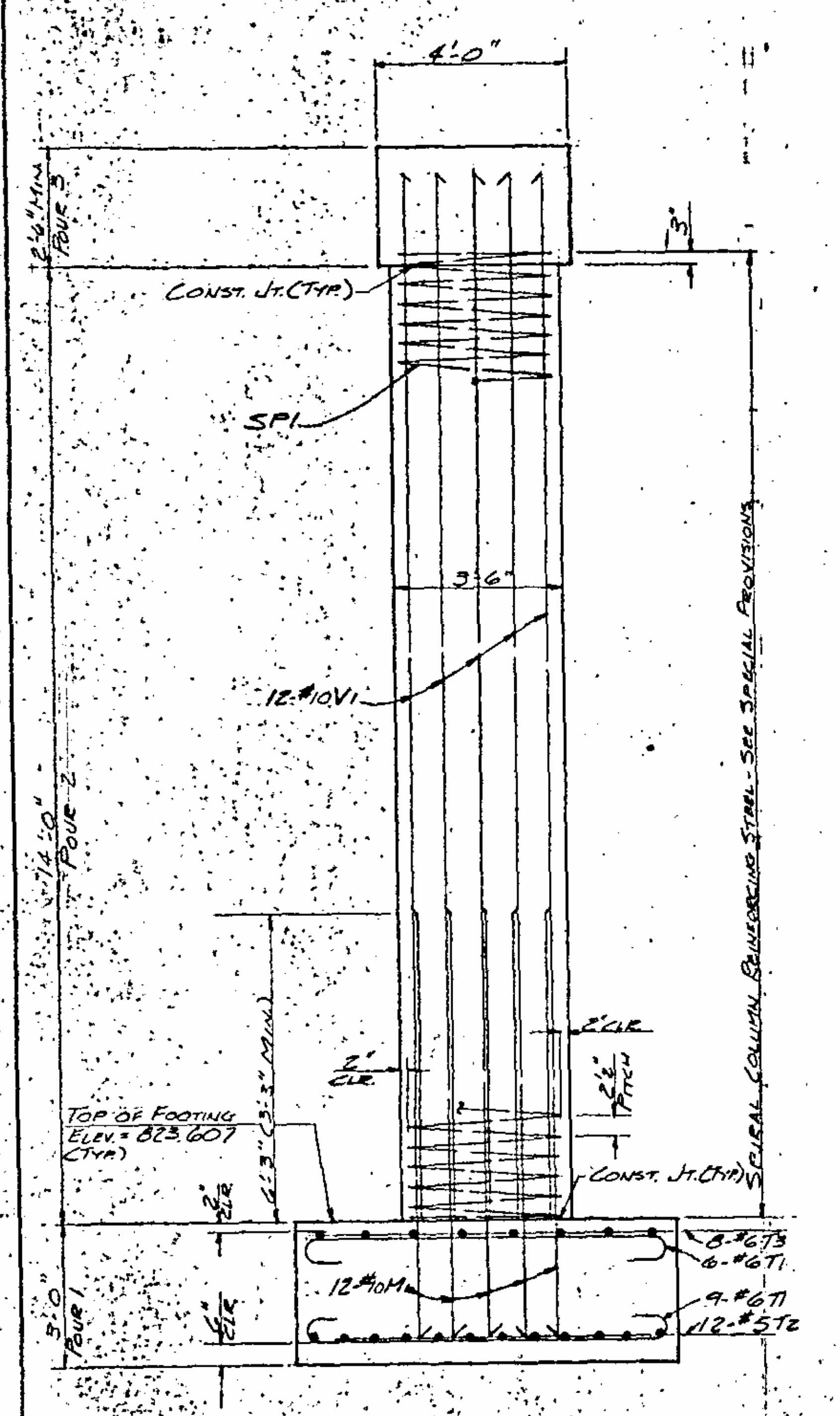

END ELEVATION

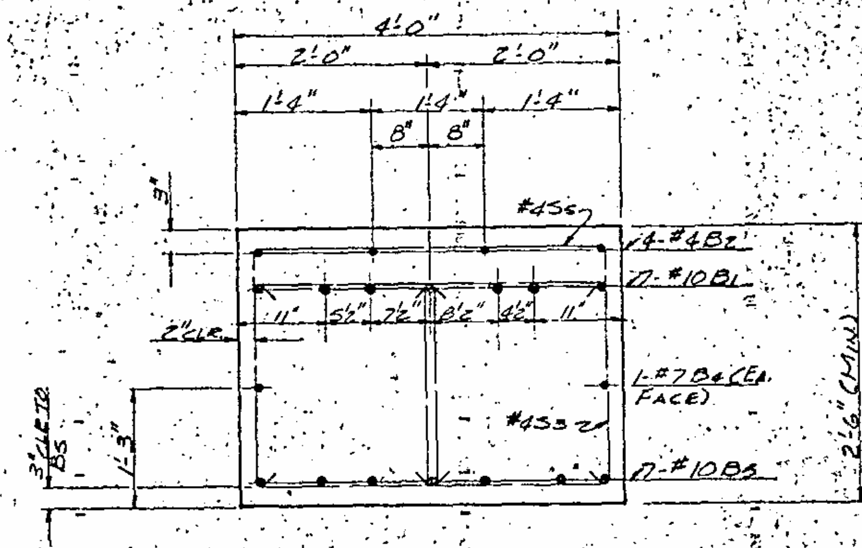

SECTION "A"-"A"

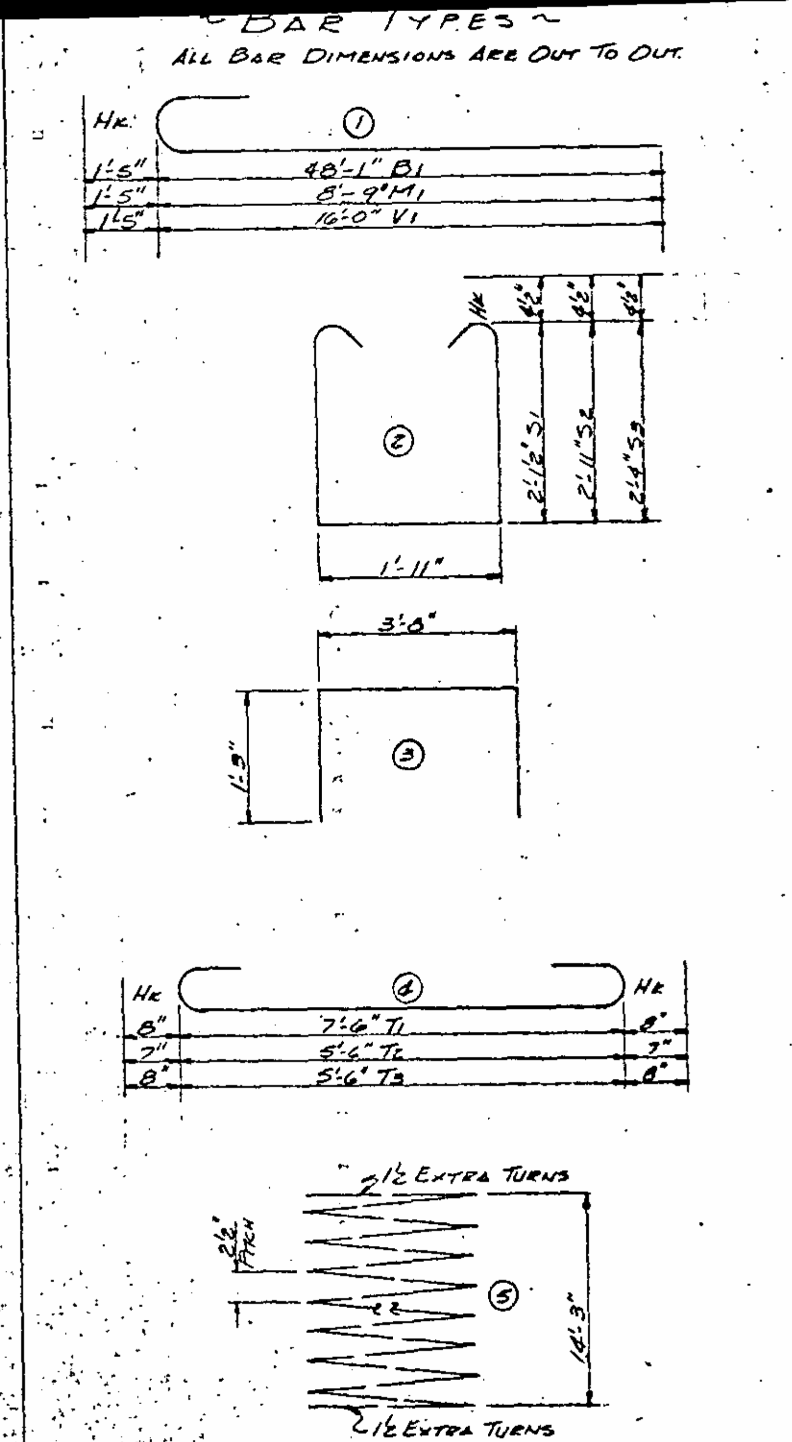

DIV. NO.		
4	N.C.	
F.A. PROJECT		

BILL OF MATERIAL

FOR BENT 3.

BAR	NO.	SIZE	TYPE	LENGTH	WEIGHT
B1	14	#10	1	49'-6"	2921
B2	8	#4	STR	21'-0"	112
B3	7	#10		24'-11"	751
B4	6	#7		39'-0"	466
B5	14	#10		39'-11"	2405
B6	2	#7		17'-7"	72
B7	7	#10	STR	35'-11"	1082
M1	84	#10	1	10'-2"	3675
S1	86	#4	2	6'-11"	397
S2	52		2	8'-6"	295
S3	86		2	7'-4"	421
S4	72		STR	3'-6"	189
S5	28	#4	3	6'-2"	115
T1	105	#6	4	8'-10"	1395
T2	84	#5	4	6'-9"	584
T3	56	#6	4	6'-10"	522
V1	84	#10	1	17'-5"	6295
TOTAL					21609.
SP1	7		5	70'-2"	3279

SPIRAL COL. REINF. STEEL-LBS. 3279.
REINFORCING STEEL-LBS. 21609

CLASS A. CONC. ~ CU. YD'S. ~

POUR 1 - FOOTING	37.5
POUR 2 - COL.	34.9
POUR 3 - CAP	
LEFT	26.1
RIGHT	22.2
TOTAL	120.5 C.Y.

PROJECT NO. 8.1551705

RANDOLPH-GUILFORD COUNTY

STATION: 590+49.33-L-LT. LN.

SHEET 2 OF 2

STATE OF NORTH CAROLINA
DEPARTMENT OF TRANSPORTATION AND HIGHWAY SAFETY
RALEIGH

~ SUBSTRUCTURE ~
BENT # 3

REVISIONS					
NO.	BY	DATE	NO.	BY	DATE
1			3		
2			4		

SHEET S-55

122

DRAWN BY J.C. HOGGE DATE 11-78
CHECKED BY CHARLES POPE DATE 12-78

FED. ROAD DIV. NO.	STATE	PROJECT NO.
4	N. C.	
F. A. PROJECT		

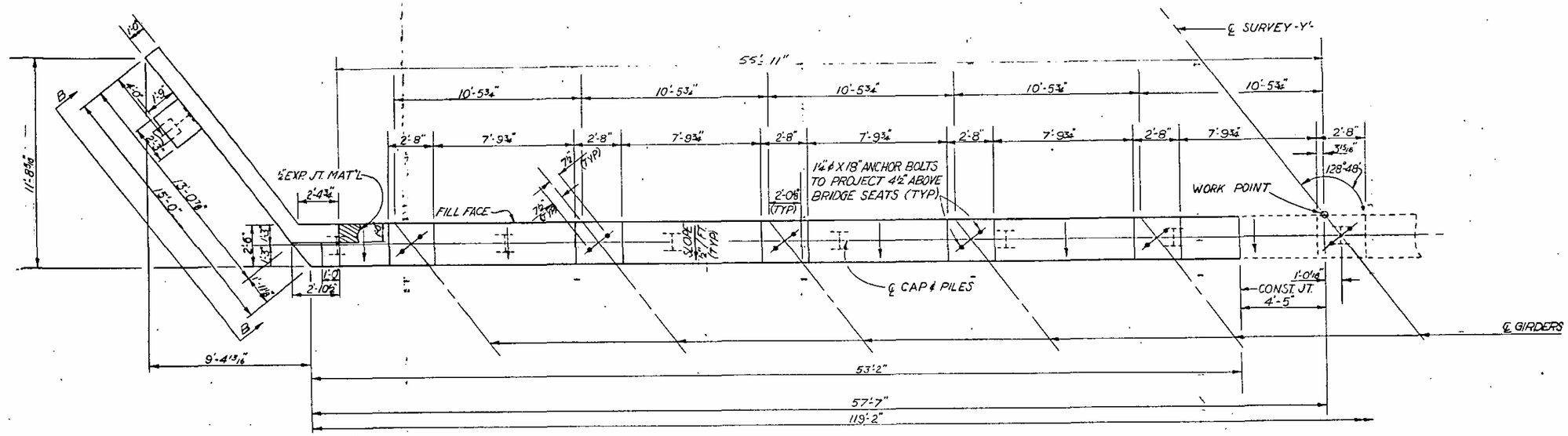

PLAN

NOTE:

THE TOP SURFACE AREAS OF THE END BENT CAPS SHALL BE CURED IN ACCORDANCE WITH THE STANDARD SPECIFICATIONS EXCEPT THE MEMBRANE CURING COMPOUND METHOD SHALL NOT BE USED.

THE EPOXY PROTECTIVE COATING SHALL BE APPLIED TO THE TOP SURFACE AREA, INCLUDING CHAMFER AREA, OF THE CAP.

FOR EPOXY PROTECTIVE COATING, SEE SPECIAL PROVISIONS.

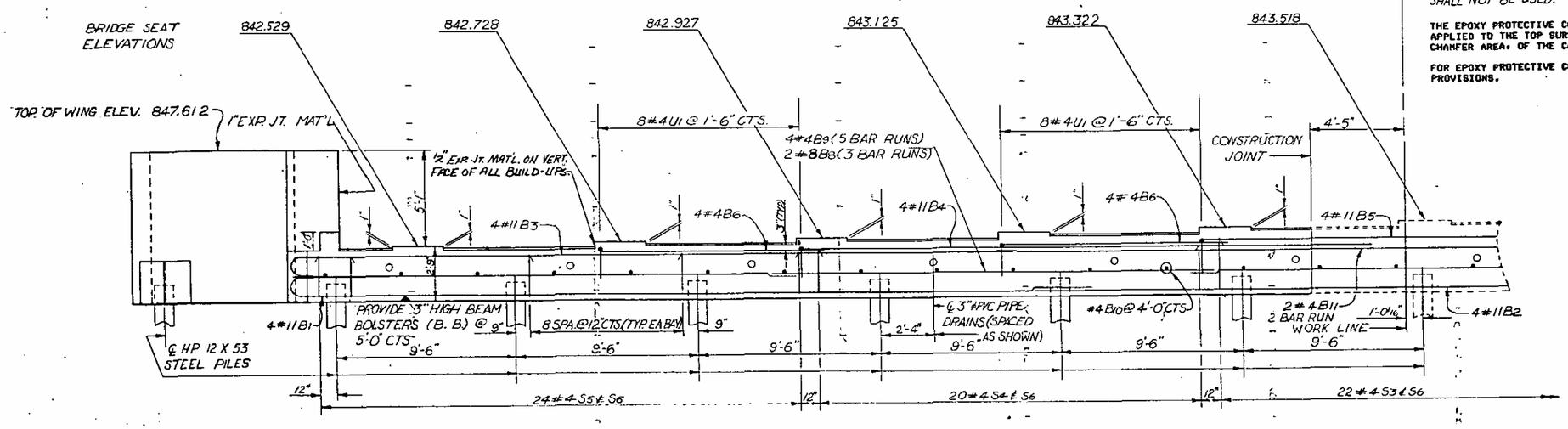

ELEVATION

PROJECT NO. 8.1531705

RANDOLPH-GUILFORD COUNTY

STATION: 590+49.33-L-LT LN

SHEET 1 of 3

STATE OF NORTH CAROLINA
DEPARTMENT OF TRANSPORTATION AND HIGHWAY SAFETY
RALEIGH

SUBSTRUCTURE
END BENT NO. 2

SCT 1978

REVISIONS						
NO.	BY	DATE	NO.	BY	DATE	
1			3			
2			4			

SHEET NO. S-56
TOTAL SHEETS 122

DRAWN BY R. CHANG DATE 10/78
CHECKED BY J.S. Hodge DATE

FED. ROAD DIV. NO.	STATE	PROJECT NO.
4	N. C.	
F. A. PROJECT		

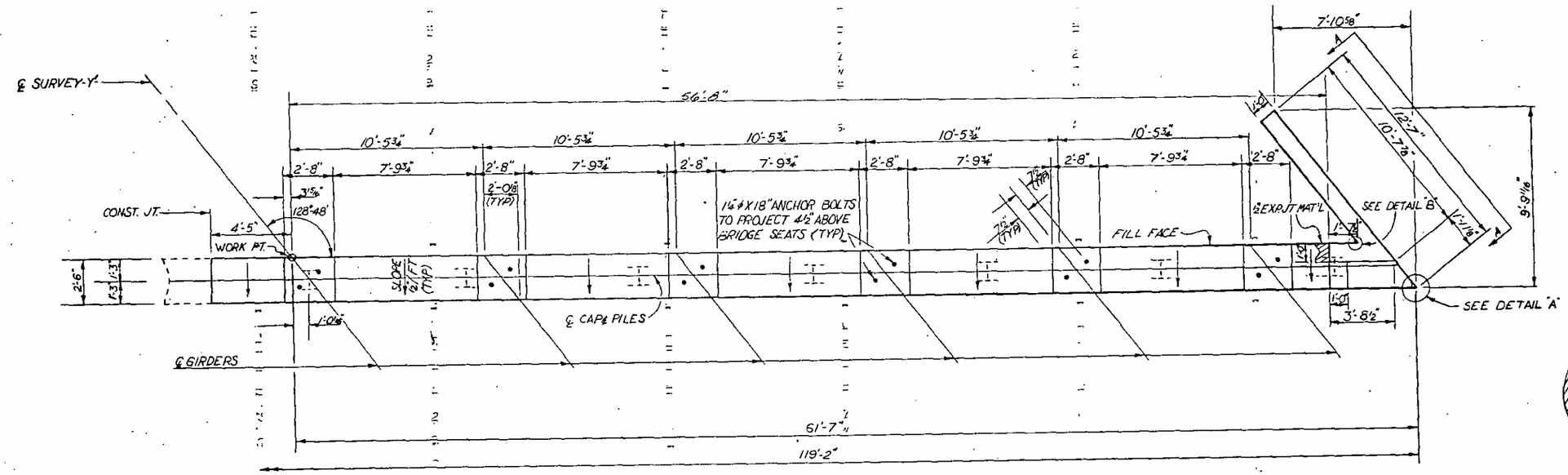

PLAN

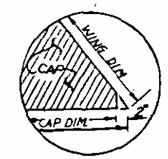

DETAIL "A"

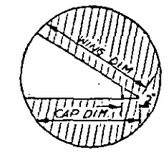

DETAIL "B"

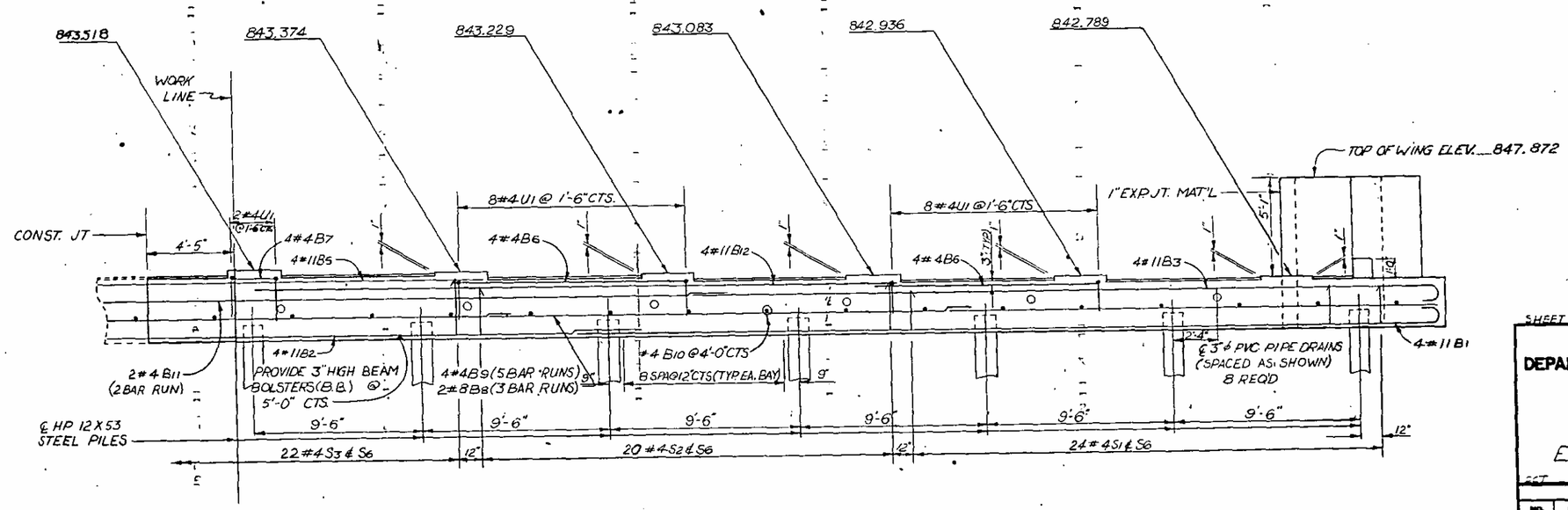

ELEVATION

PROJECT NO. 8.1531705

RANDOLPH-GUILFORD COUNTY

STATION: 590+49.33-L-LT LN

SHEET 2 of 3

STATE OF NORTH CAROLINA
DEPARTMENT OF TRANSPORTATION AND HIGHWAY SAFETY
RALEIGH

SUBSTRUCTURE
END BENT NO. 2

REVISIONS						
NO.	BY	DATE	NO.	BY	DATE	
1			3			
2			4			

SHEET NO. S-57
TOTAL SHEETS 122

DRAWN BY K. CRAIG DATE OCT 78
CHECKED BY N.C. HORGE DATE 12-78

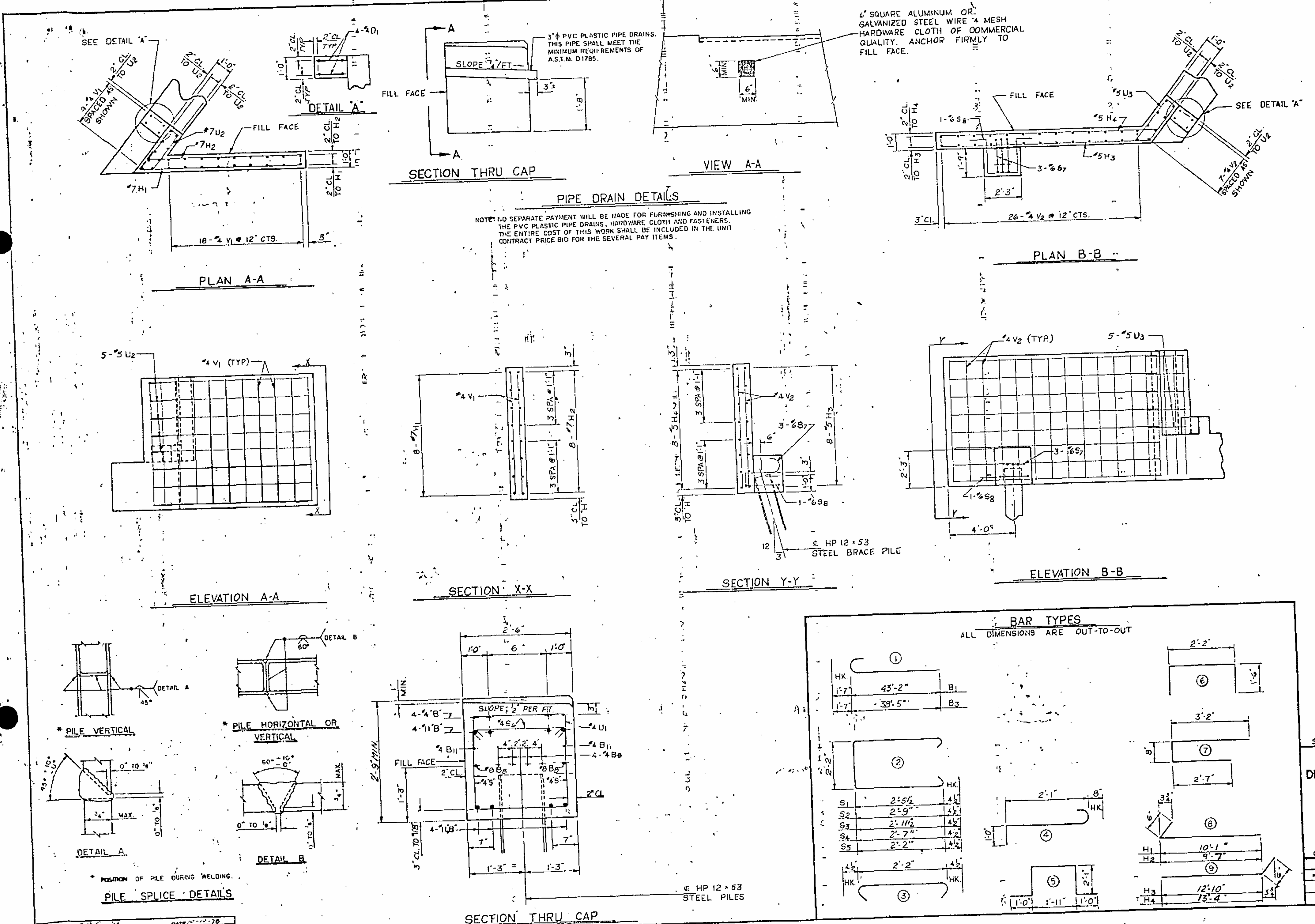

BILL OF MATERIAL					
END BENT #2					
BAR	NO.	SIZE	TYPE	LENGTH	WEIGHT
B1	8	#11	1	44'-9"	1902
B2	4	#11	STR	41'-6"	882
B3	8	#11	1	40'-0"	1700
B4	4	#11	STR	29'-8"	630
B5	4	#11	STR	23'-3"	494
B6	16	#4	STR	11'-9"	126
B7	4	#4	STR	2'-4"	6
B8	6	#8	STR	41'-4"	662
B9	20	#4	STR	24'-9"	331
B10	30	#4	STR	2'-2"	43
B11	4	#4	STR.	23'-3"	62
B12	4	#11	STR.	29'-10"	634
D1	8	#4	STR	2'-0"	11
H1	8	#7	8	10'-7"	173
H2	8	#7	8	10'-1"	165
H3	8	#5	9	13'-4"	111
H4	8	#5	9	13'-10"	115
S1	24	#4	2	7'-10"	126
S2	20	#4	2	8'-5"	112
S3	22	#4	2	8'-10"	130
S4	20	#4	2	8'-1"	108
S5	24	#4	2	7'-3"	116
S6	110	#4	3	2'-11"	214
S7	3	#6	4	3'-9"	17
S8	1	#6	5	8'-1"	12
U1	32	#4	6	5'-2"	110
U2	5	#7	7	6'-5"	66
U3	5	#5	7	6'-5"	33
V1	27	4	STR.	7'-6"	135
V2	33	4	STR.	7'-8"	169

REINFORCING STEEL — 9395 LBS.
CLASS "A" CONCRETE — 42.5 CU YD.
HP 12 × 53 STEEL PILES
NO. = 14 LIN. FT. = 280

CONCRETE BREAKDOWN (CU. YDS.)
LEFT SIDE 19.6
RIGHT SIDE 22.9

PROJECT NO. 8.1531705
RANDOLPH-GUILFORD COUNTY
STATION: 590+49.33 -L- LT. LN.

SHEET 3 OF 3

STATE OF NORTH CAROLINA
DEPARTMENT OF TRANSPORTATION AND HIGHWAY SAFETY
RALEIGH
SUBSTRUCTURE
END BENT NO. 2
DETAILS

OCT. 1978

SHEET NO. S-58
TOTAL SHEETS 122

DRAWN BY R. C. Cyeth DATE 10-11-78
CHECKED BY J. C. Hodge DATE 12-28

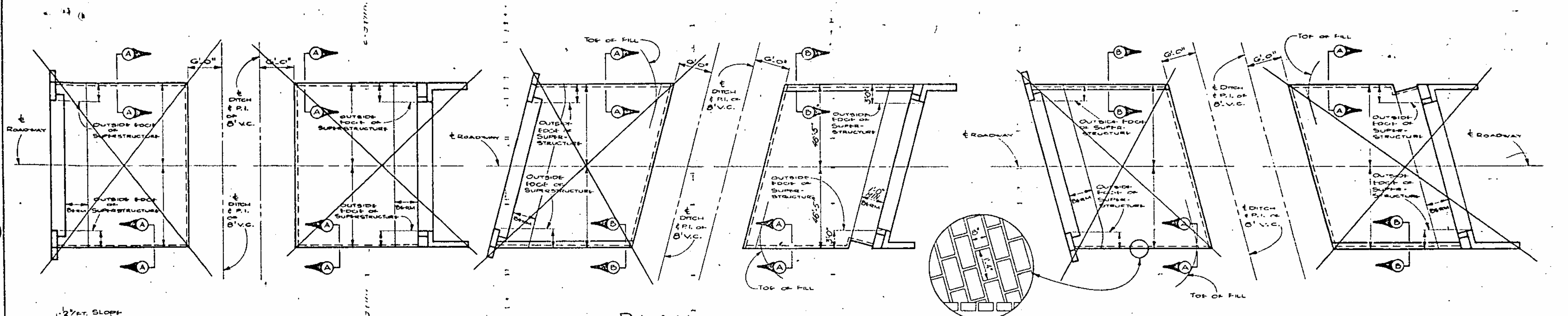

PLAN

DETAIL A

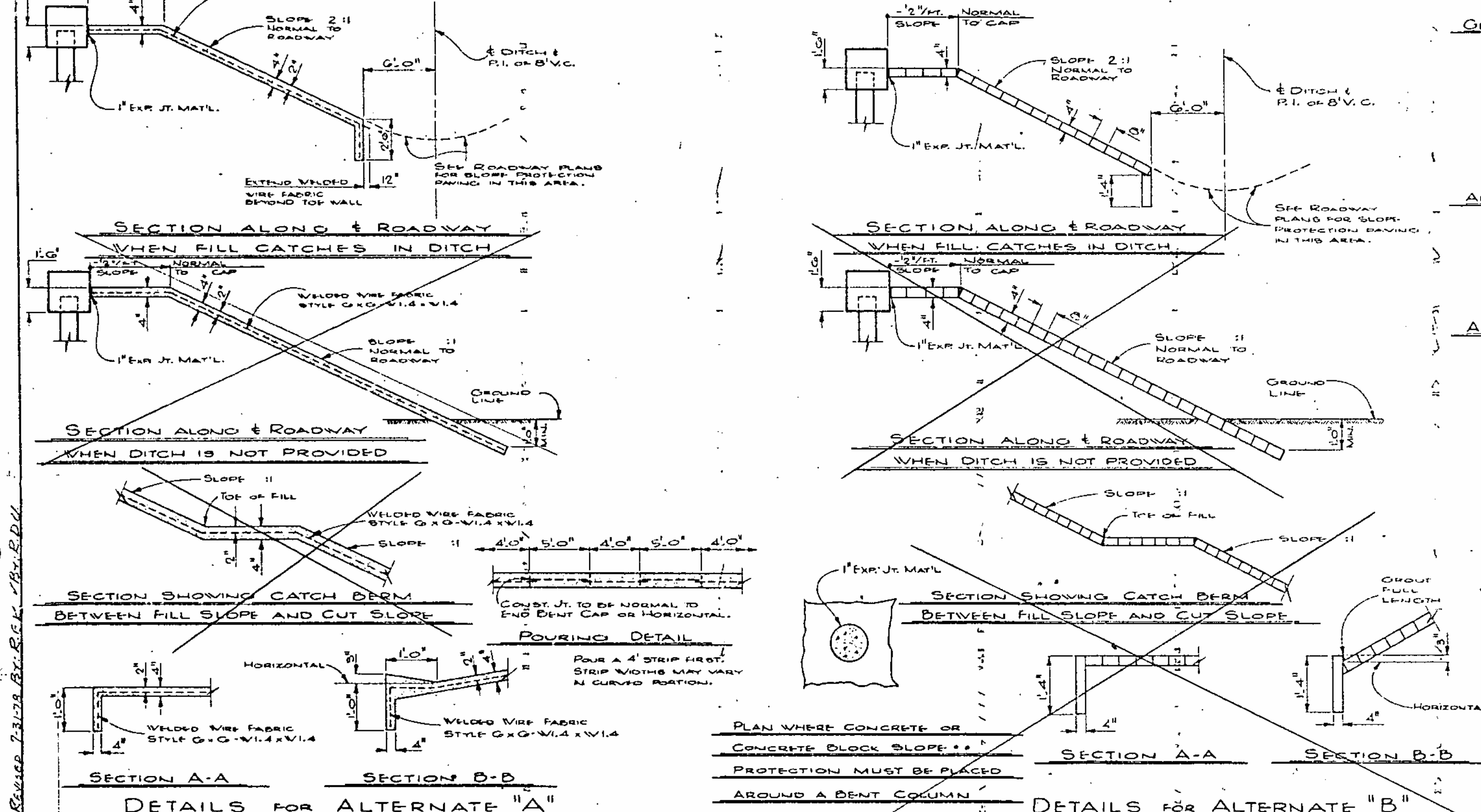

REVISED 7-31-78 BY: R.G.K. / BY: R.D.W.

ASSEMBLED BY K. CRAIG	DATE 11/78
CHECKED BY J.C. HOGGE	DATE 12-78
DRAWN BY C.C. MITCHINER	DATE AUG. 1975
CHECKED BY William J. Rogers	DATE Aug 28 1975

NOTES

GENERAL NOTES:

A 4" concrete slope protection paving shall be placed under the ends of the bridge. Limits of the protection shall be as shown in the details. The contractor, at his option, may place either type, Alternate "A" or "B", as described below. Immediately before placing the paving, the slope shall be properly shaped and firmly compacted so that it conforms to the lines and grades shown. The finished surface shall be reasonably smooth and uniform and shall not vary more than ½ inch in a distance of 10 feet. Straight edging will not be required unless, in the opinion of the engineer, visual inspection indicates a need for it. Method of measurement and basis of payment shall be as prescribed in Section 870 of the Standard Specifications.

The same type of slope protection shall be used under both ends of any one bridge.

ALTERNATE "A":

Alternate "A" shall consist of 4" poured in place concrete paving as shown in details on this sheet. Concrete shall be Class B. The concrete surface shall be floated with a wooden float and finished. Alternate "A" welded wire fabric reinforcing to be style G x G-W1.4 x W1.4 60" wide. Adjacent runs of welded wire fabric to lap at least 6". Slope protection to be poured in alternate 4' and 5' strips as shown in pouring detail. The cost of the welded wire fabric to be included in the contract unit price bid per square yard for 4" concrete slope protection.

ALTERNATE "B":

Alternate "B" shall consist of solid concrete blocks 4" x 8" x 16" laid in horizontal courses such that those in successive courses will break joints with units in the preceding one. Blocks are to be laid with their long axis parallel to the end bent cap with grouted joints preferably ¾" but not less than ½" nor more than 1¼" wide between successive courses and ends of blocks. Joints shall be grouted by pouring a mixture of one part Portland cement to three parts sand mixed with sufficient water to enable the mixture to be poured through a spout. The concrete blocks shall be cast to accurate dimensions, shall have uniform surface color and texture, and shall be manufactured of materials to produce a compressive strength of not less than 3,000 P.S.I. at age of 28 days. No broken blocks shall be used except in constructing a straight line along each side of the paving down the slope. Care shall be taken to break the blocks so as to give a uniform workmanlike joint and surface.

PROJECT NO. 8.1551705

RANDOLPH-GUILFORD **COUNTY**

STATION: 590+49.33-L-LT LN

Sheet 1 of 2

	4" Conc. Slope Protection or 4" Conc. Block Slope Protection - S.Y.		Welded Wire Fabric 60" Wide
	End Bent 1	End Bent 2	Approx. L.F.
Bridge @ 590 +49.33-L-LT LN	685	655	2680

STATE OF NORTH CAROLINA
DEPARTMENT OF TRANSPORTATION
RALEIGH

STANDARD
SLOPE PROTECTION
PAVING DETAILS

JULY 1978

REVISIONS					
NO.	BY	DATE	NO.	BY	DATE
1			3		
2			4		

SHEET NO. S-59
TOTAL SHEETS 122

STD. NO. SPI

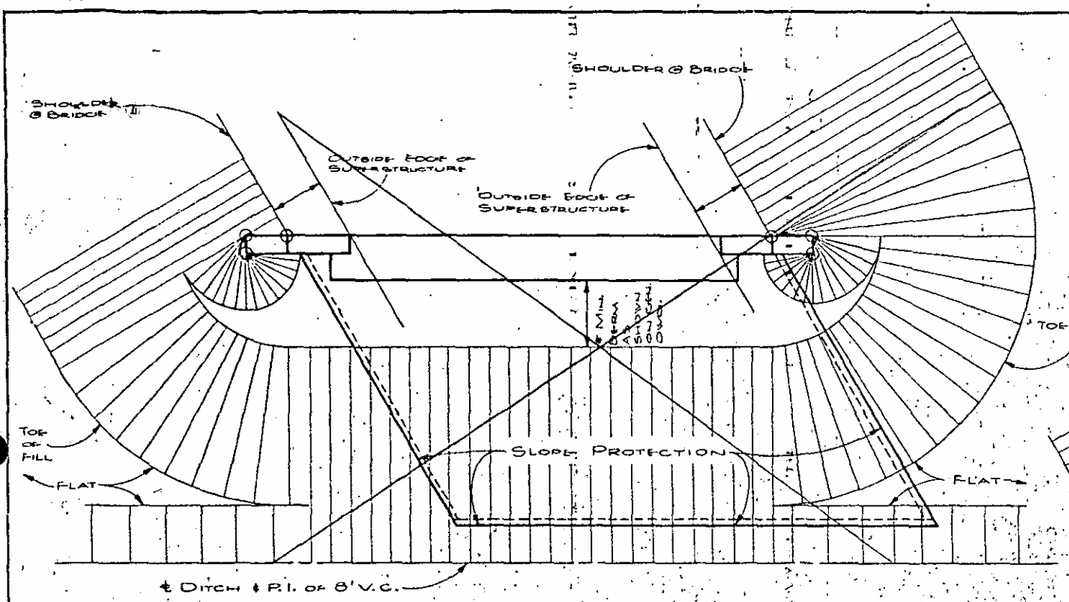

END BENT WITH FAR WALLS — SKEWED

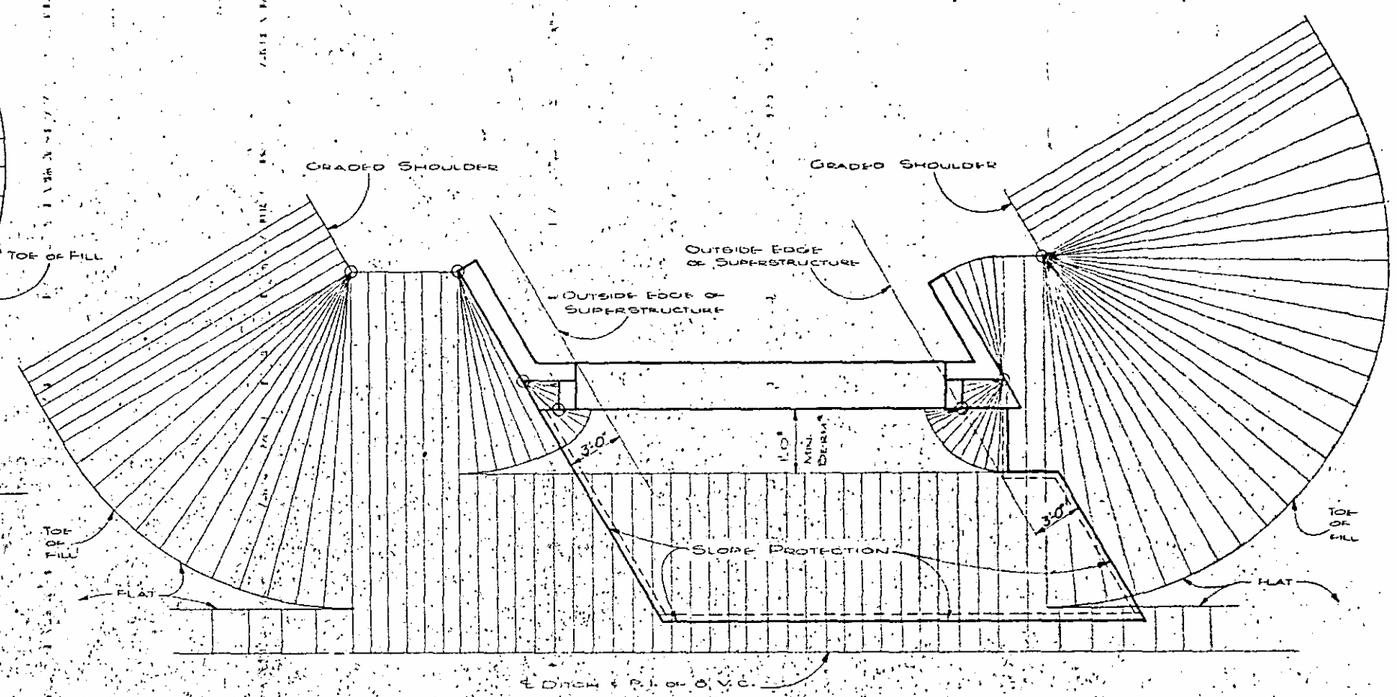

END BENT WITH SWEPT-BACK WINGS — SKEWED

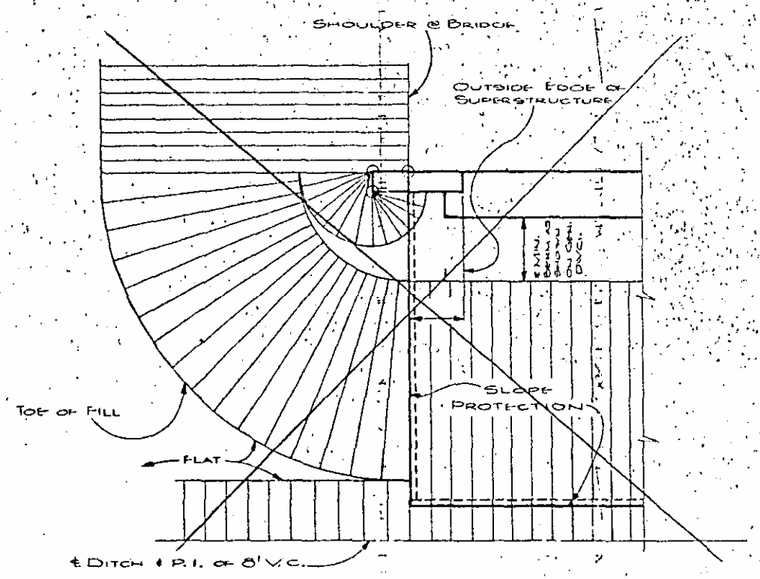

HALF-PLAN END BENT WITH FAR WALLS - 90°

NOTE: OTHER SIDE SIMILAR

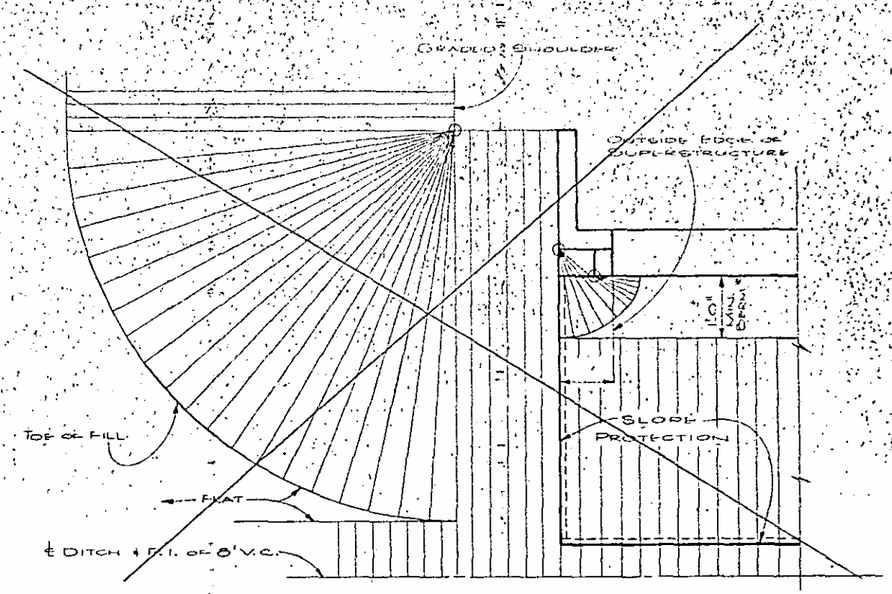

HALF-PLAN END BENT WITH SWEPT-BACK WINGS - 90°

NOTE: OTHER SIDE SIMILAR

* NOTE: VARY BERM WIDTH AS NECESSARY TO FIT DITCH ALIGNMENT.

PROJECT NO. 8.1531705

RANDOLPH-GUILFORD COUNTY

STATION: 590+49.33-L-LT.LN

SHEET 2 OF 2

STATE OF NORTH CAROLINA
DEPARTMENT OF TRANSPORTATION
RALEIGH

STANDARD
SLOPE PROTECTION
PAVING DETAILS

SEPTEMBER 1975

REVISIONS						SHEET NO.
NO.	BY	DATE	NO.	BY	DATE	S-60
1			3			TOTAL SHEETS
2			4			122

ASSEMBLED BY	K. CRAIG	DATE	10/75
CHECKED BY	J. C. HARDE	DATE	12-78
DRAWN BY	C. C. MITCHINER	DATE	SEPT. 1975
CHECKED BY	William J. Rogers	DATE	Sept 10, 1975

STD. NO. SP2

BAR	NUMBR	SIZE	TYPE	LENGTH	WEIGHT
A1	49	4	STR	30- 0	982
A2	14	4	STR	20- 8	193
A101	2	4	STR	18-10	25
A102	2	4	STR	17- 0	23
A103	2	4	STR	15- 1	20
A104	2	4	STR	13- 3	18
A105	2	4	STR	11- 4	15
A106	2	4	STR	9- 6	13
A107	2	4	STR	7- 8	10
A108	2	4	STR	5- 9	8
A109	2	4	STR	3-11	5
A110	2	4	STR	2- 1	3
A111	2	4	STR	29- 0	39
A112	2	4	STR	27- 2	36
A113	2	4	STR	25- 3	34
A114	2	4	STR	23- 5	31
A115	2	4	STR	21- 7	29
A116	2	4	STR	19- 8	26
A117	2	4	STR	17-10	24
A118	2	4	STR	15-11	21
A119	2	4	STR	14- 1	19
A120	2	4	STR	12- 3	16
A121	2	4	STR	10- 4	14
A122	2	4	STR	8- 6	11
A123	2	4	STR	6- 7	9
A124	2	4	STR	4- 9	6
A125	2	4	STR	2-11	4
A126	2	4	STR	29-10	40
A127	2	4	STR	28- 0	37
A128	2	4	STR	26- 2	35
A129	2	4	STR	24- 3	32
A130	2	4	STR	22- 5	30
A131	2	4	STR	20- 6	27
A132	2	4	STR	18- 8	25
A133	2	4	STR	16-10	22
A134	2	4	STR	14-11	20
A135	2	4	STR	13- 1	17
A136	2	4	STR	11- 2	15
A137	2	4	STR	9- 4	12
A138	2	4	STR	7- 6	10
A139	2	4	STR	5- 7	7
A140	2	4	STR	3- 9	5
B1	1	6	STR	9- 3	14
B2	1	6	STR	9- 8	15
B3	1	6	STR	10- 1	15
B4	1	6	STR	10- 5	16
B5	1	6	STR	10-10	16
B6	1	6	STR	11- 3	17
B7	1	6	STR	11- 8	18
B8	1	6	STR	12- 1	18
B9	1	6	STR	12- 6	19
B10	1	6	STR	12-10	19
B11	1	6	STR	13- 3	20
B12	1	6	STR	13- 8	21
B13	1	6	STR	14- 1	21
B14	1	6	STR	14- 6	22
B15	1	6	STR	14-11	22
B16	1	6	STR	15- 4	23
B17	1	6	STR	15- 9	23
B18	1	6	STR	16- 1	24
B19	1	6	STR	16- 6	24
B20	1	6	STR	16-11	25
B21	1	6	STR	17- 3	25
B22	1	6	STR	17- 8	26
B23	1	6	STR	18- 1	27
B24	1	6	STR	18- 6	27
B25	1	6	STR	18-11	28
B26	1	6	STR	19- 4	28
B27	1	6	STR	19- 3	29
B28	1	6	STR	20- 1	30
B29	1	6	STR	20- 6	30
B30	1	6	STR	20-11	31
B31	1	6	STR	21- 4	32
B32	1	6	STR	21- 9	32
B33	1	6	STR	22- 1	33
B34	1	6	STR	22- 6	33
B35	1	6	STR	22-11	34
B36	1	6	STR	23- 4	34
B37	1	6	STR	23- 9	35
B38	1	6	STR	24- 1	36
B39	1	6	STR	24- 6	36
B40	1	6	STR	24-11	37
B41	1	6	STR	25- 4	37
B42	1	6	STR	25- 9	38
B43	1	6	STR	26- 2	39
B44	1	6	STR	26- 6	39
B45	1	6	STR	26-11	40
B46	1	6	STR	27- 4	40
B47	1	6	STR	27- 9	41
B48	1	6	STR	28- 2	42
B49	1	6	STR	28- 7	42
B50	1	6	STR	28-11	43
B51	1	6	STR	29- 4	43
B52	1	6	STR	29- 9	44
B53	1	6	STR	30- 2	44
B54	1	6	STR	30- 7	45
B55	1	6	STR	30-11	46
B56	1	6	STR	31- 4	46
B57	1	6	STR	31- 9	47
B58	1	6	STR	32- 2	48
B59	1	6	STR	32- 7	48
B60	1	6	STR	33- 0	49
B61	1	6	STR	33- 4	49
B62	1	6	STR	33- 9	50
B63	1	6	STR	34- 2	50
B64	1	6	STR	34- 7	51
B65	1	6	STR	35- 0	52
B66	1	6	STR	35- 5	52
B67	1	6	STR	35- 9	53
B68	1	6	STR	36- 2	53
B69	1	6	STR	36- 7	54
B70	1	6	STR	37- 0	55
B71	1	6	STR	37- 5	56
B72	1	6	STR	37- 9	57
B73	1	6	STR	38- 2	57
B74	1	6	STR	38- 7	58
B75	1	6	STR	39- 0	59
B76	1	6	STR	39- 5	59
B77	1	6	STR	39-10	60
B78	1	6	STR	40- 2	60
B79	1	6	STR	40- 7	61
B80	1	6	STR	41- 0	62
B81	1	6	STR	41- 5	62
B82	1	6	STR	41-10	63
B83	1	6	STR	42- 3	63
B84	1	6	STR	42- 7	64
B85	1	6	STR	43- 0	65
B86	1	6	STR	43- 5	65
B87	1	6	STR	43-10	66
B88	1	6	STR	44- 3	66
B89	1	6	STR	44- 7	67
B90	1	6	STR	45- 0	68
B91	1	6	STR	45- 5	68
B92	1	6	STR	45-10	69
B93	1	6	STR	46- 3	69
B94	1	6	STR	46- 8	70
B95	1	6	STR	47- 0	71
B96	1	6	STR	47- 5	71
B97	1	6	STR	47-10	72
B98	1	6	STR	48- 3	72
B99	1	6	STR	48- 8	73
B100	1	6	STR	49- 1	74
B101	1	6	STR	49- 5	74
B102	1	6	STR	49-10	75
B103	1	6	STR	50- 3	75
B104	1	6	STR	50- 8	76
B105	1	6	STR	51- 1	77
B106	1	6	STR	51- 6	77
B107	1	6	STR	51-10	78
B108	1	6	STR	52- 3	78
B109	1	6	STR	52- 8	79
B110	1	6	STR	53- 1	80
B111	1	6	STR	53- 6	80
B112	1	6	STR	53-10	81
B113	1	6	STR	54- 3	81
B114	1	6	STR	54- 8	82
B115	1	6	STR	55- 1	83
B116	1	6	STR	55- 6	83
B117	1	6	STR	55-11	84
B118	1	6	STR	56- 3	84
B119	1	6	STR	56- 8	85
B120	1	6	STR	57- 1	86
B121	1	6	STR	57- 6	86
B122	1	6	STR	57-11	87
B123	1	6	STR	58- 4	88
B124	1	6	STR	58- 8	88
B125	1	6	STR	59- 1	89
B126	1	6	STR	59- 6	89
B127	1	6	STR	59-11	90
B128	1	6	STR	2- 2	3
B129	1	6	STR	2- 6	4
B130	1	6	STR	2-11	4
B131	1	6	STR	3- 4	5
B132	1	6	STR	3- 9	6
B133	1	6	STR	4- 2	6
B134	1	6	STR	4- 7	7
B135	1	6	STR	4-11	7
B136	1	6	STR	5- 4	8
B137	1	6	STR	5- 9	9
B138	1	6	STR	6- 2	9
B139	1	6	STR	6- 7	10
B140	1	6	STR	7- 0	11
B141	1	6	STR	7- 4	11
B142	1	6	STR	7- 9	12
B143	1	6	STR	8- 2	12
B144	1	6	STR	8- 7	13
B145	1	6	STR	9- 0	14
B146	1	6	STR	9- 4	14
B147	1	6	STR	9- 9	15
B148	1	6	STR	10- 2	15
B149	1	6	STR	10- 7	16
B150	1	6	STR	11- 0	17
B151	1	6	STR	11- 5	17
B152	1	6	STR	11- 9	18
B153	1	6	STR	12- 2	18
B154	1	6	STR	12- 7	19
B155	1	6	STR	13- 0	20
B156	1	6	STR	13- 5	20
B157	1	6	STR	13-10	21
B160	30	6	STR	60- 0	2,704
B201	1	6	STR	9- 9	15
B202	1	6	STR	10- 2	15
B203	1	6	STR	10- 7	16
B204	1	6	STR	10-11	16
B205	1	6	STR	11- 4	17
B206	1	6	STR	11- 9	18
B207	1	6	STR	12- 2	18
B208	1	6	STR	12- 7	19
B209	1	6	STR	13- 0	20
B210	1	6	STR	13- 4	20
B211	1	6	STR	13- 9	21
B212	1	6	STR	14- 2	21
B213	1	6	STR	14- 7	22
B214	1	6	STR	15- 0	23
B215	1	6	STR	15- 5	23
B216	1	6	STR	15- 9	24
B217	1	6	STR	16- 2	24
B218	1	6	STR	16- 7	25
B219	1	6	STR	17- 0	26
B220	1	6	STR	17- 5	26
B221	1	6	STR	17- 9	27
B222	1	6	STR	18- 2	27
B223	1	6	STR	18- 7	28
B224	1	6	STR	19- 0	29
B225	1	6	STR	19- 5	29
B226	1	6	STR	19-10	30
B227	1	6	STR	20- 2	30
B228	1	6	STR	20- 7	31
B229	1	6	STR	21- 0	32
B230	1	6	STR	21- 5	32
B231	1	6	STR	21-10	33
B232	1	6	STR	22- 3	33
B233	1	6	STR	22- 7	34
B234	1	6	STR	23- 0	35
B235	1	6	STR	23- 5	35
B236	1	6	STR	23-10	36
B237	1	6	STR	24- 3	36
B238	1	6	STR	24- 7	37
B239	1	6	STR	25- 0	38
B240	1	6	STR	25- 5	38
B241	1	6	STR	25-10	39
B242	1	6	STR	26- 3	39
B243	1	6	STR	26- 8	40
B244	1	6	STR	27- 0	41
B245	1	6	STR	27- 5	41
B246	1	6	STR	27-10	42
B247	1	6	STR	28- 3	42
B248	1	6	STR	28- 8	43
B249	1	6	STR	29- 1	44
B250	1	6	STR	29- 5	44
B251	1	6	STR	29-10	45
B252	1	6	STR	30- 3	45
B253	1	6	STR	30- 8	46
B254	1	6	STR	31- 1	47
B255	1	6	STR	31- 5	47
B256	1	6	STR	31-10	48
B257	1	6	STR	32- 3	48
B258	1	6	STR	32- 8	49
B259	1	6	STR	33- 1	50
B260	1	6	STR	33- 6	50
B261	1	6	STR	33-10	51
B262	1	6	STR	34- 3	51
B263	1	6	STR	34- 8	52
B264	1	6	STR	35- 1	53
B265	1	6	STR	35- 6	53
B266	1	6	STR	35-11	54
B267	1	6	STR	36- 3	54
B268	1	6	STR	36- 8	55
B269	1	6	STR	37- 1	56
B270	1	6	STR	37- 6	56
B271	1	6	STR	37-11	57
B272	1	6	STR	38- 3	57
B273	1	6	STR	38- 8	58
B274	1	6	STR	39- 1	59
B275	1	6	STR	39- 6	59
B276	1	6	STR	39-11	60
B277	1	6	STR	40- 4	61
B278	1	6	STR	40- 8	61
B279	1	6	STR	41- 1	62
B280	1	6	STR	41- 6	62
B281	1	6	STR	41-11	63
B282	1	6	STR	42- 4	64
B283	1	6	STR	42- 9	64
B284	1	6	STR	43- 1	65
B285	1	6	STR	43- 6	65
B286	1	6	STR	43-11	66
B287	1	6	STR	44- 4	67
B288	1	6	STR	44- 9	67
B289	1	6	STR	45- 1	68
B290	1	6	STR	45- 6	68
B291	1	6	STR	45-11	69
B292	1	6	STR	46- 4	70
B293	1	6	STR	46- 9	70
B294	1	6	STR	47- 2	71
B295	1	6	STR	47- 6	71
B296	1	6	STR	47-11	72
B297	1	6	STR	48- 4	73
B298	1	6	STR	48- 9	73
B299	1	6	STR	49- 2	74
B300	1	6	STR	49- 7	74
B301	1	6	STR	49-11	75
B302	1	6	STR	50- 4	76
B303	1	6	STR	50- 9	76
B304	1	6	STR	51- 2	77
B305	1	6	STR	51- 7	77
B306	1	6	STR	52- 0	78
B307	1	6	STR	52- 4	79
B308	1	6	STR	52- 9	79
B309	1	6	STR	53- 2	80
B310	1	6	STR	53- 7	80
B311	1	6	STR	54- 0	81
B312	1	6	STR	54- 4	82
B313	1	6	STR	54- 9	82
B314	1	6	STR	55- 2	83
B315	1	6	STR	55- 7	83
B316	1	6	STR	56- 0	84
B317	1	6	STR	56- 5	85
B318	1	6	STR	56- 9	85
B319	1	6	STR	57- 2	86
B320	1	6	STR	57- 7	86
B321	1	6	STR	58- 0	87
B322	1	6	STR	58- 5	88
B323	1	6	STR	58-10	88
B324	1	6	STR	59- 2	89
B325	1	6	STR	59- 7	89
B326	1	6	STR	2- 3	3
B327	1	6	STR	2- 8	4
B328	1	6	STR	3- 0	5
B329	1	6	STR	3- 5	5
B330	1	6	STR	3-10	6
B331	1	6	STR	4- 3	6
B332	1	6	STR	4- 8	7
B333	1	6	STR	5- 1	8
B334	1	6	STR	5- 5	8
B335	1	6	STR	5-10	9
B336	1	6	STR	6- 3	9
B337	1	6	STR	6- 8	10
B338	1	6	STR	7- 1	11
B339	1	6	STR	7- 6	11
B340	1	6	STR	7-10	12
B341	1	6	STR	8- 3	12
B342	1	6	STR	8- 8	13
B343	1	6	STR	9- 1	14
B344	1	6	STR	9- 6	14
B345	1	6	STR	9-10	15
B346	1	6	STR	10- 3	15
B347	1	6	STR	10- 8	16
B348	1	6	STR	11- 1	17
B349	1	6	STR	11- 6	17
B350	1	6	STR	11-11	18
B351	1	6	STR	12- 3	18
B352	1	6	STR	12- 8	19
B353	1	6	STR	13- 1	20
B354	1	6	STR	13- 6	20
B355	1	6	STR	13-11	21
B356	1	6	STR	14- 4	22
B360	32	6	STR	60- 0	2,884

GRAND TOTAL 21,405

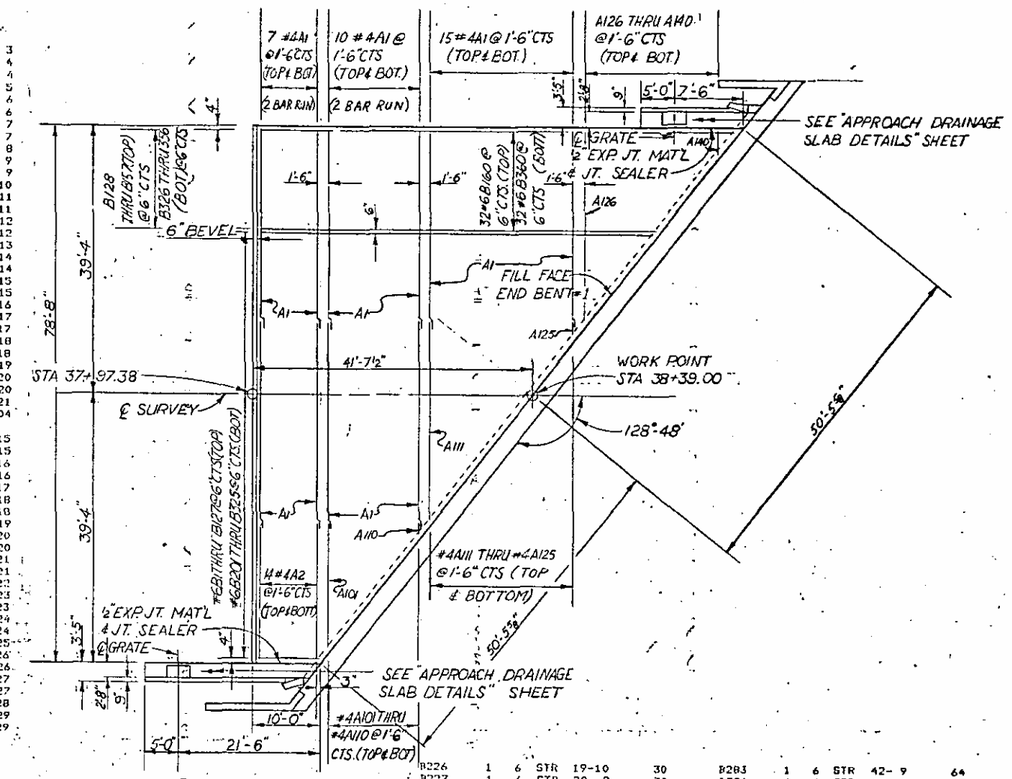

PLAN OF SLAB @ END BENT #1

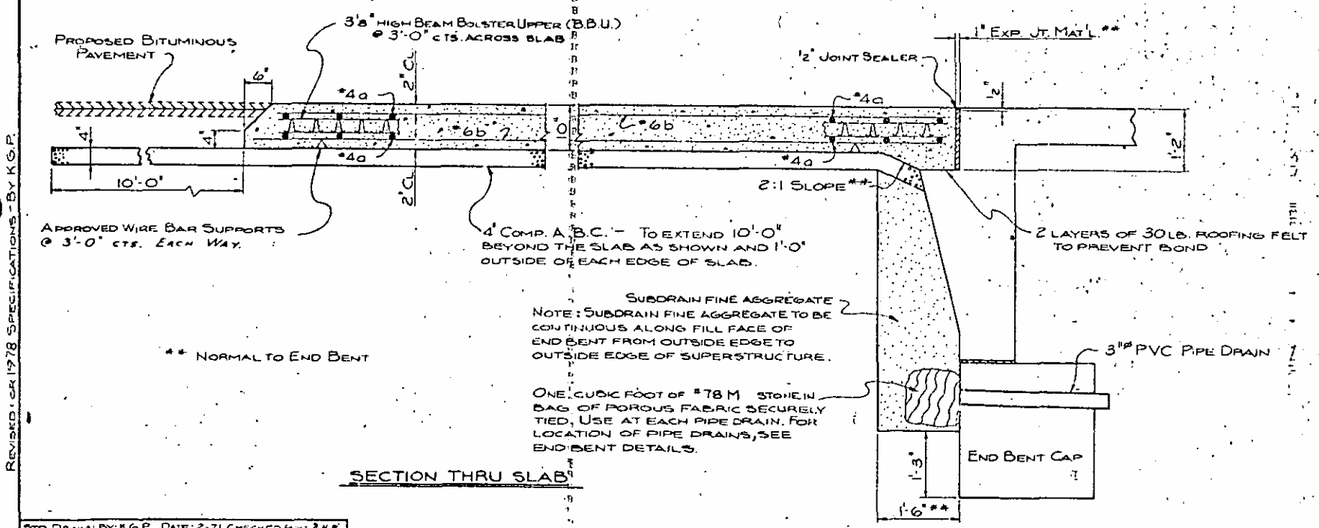

SECTION THRU SLAB

BILL OF MATERIAL					
BAR	NO.	SIZE	TYPE	LENGTH	WEIGHT

CLASS "AA" CONC 161.8 CY
CLASS "A" CONC 3.0 CY

PROJECT NO. 8.1531705
RANDOLPH-GUILFORD COUNTY
STATION: 590+4333-L-LT LN

Sheet 1 of 4

STATE OF NORTH CAROLINA
STATE HIGHWAY COMMISSION
RALEIGH

BRIDGE APPROACH SLAB FOR FLEXIBLE PAVEMENT

REVISIONS							
NO.	BY	DATE	NO.	BY	DATE	SHEET NO.	S-61
1			3			TOTAL SHEETS	122
2			4				

STD. NO. BAS2

STD. DRAWN BY: K.G.P. DATE: 2-71 CHECKED BY: J.H.R.
DRAWN BY: K.C. PAIG DATE: 11/78
CHECKED BY: L.L.C. HODGE DATE: 12-78

REVISED OCT 1978 SPECIFICATIONS - BY K.G.P.

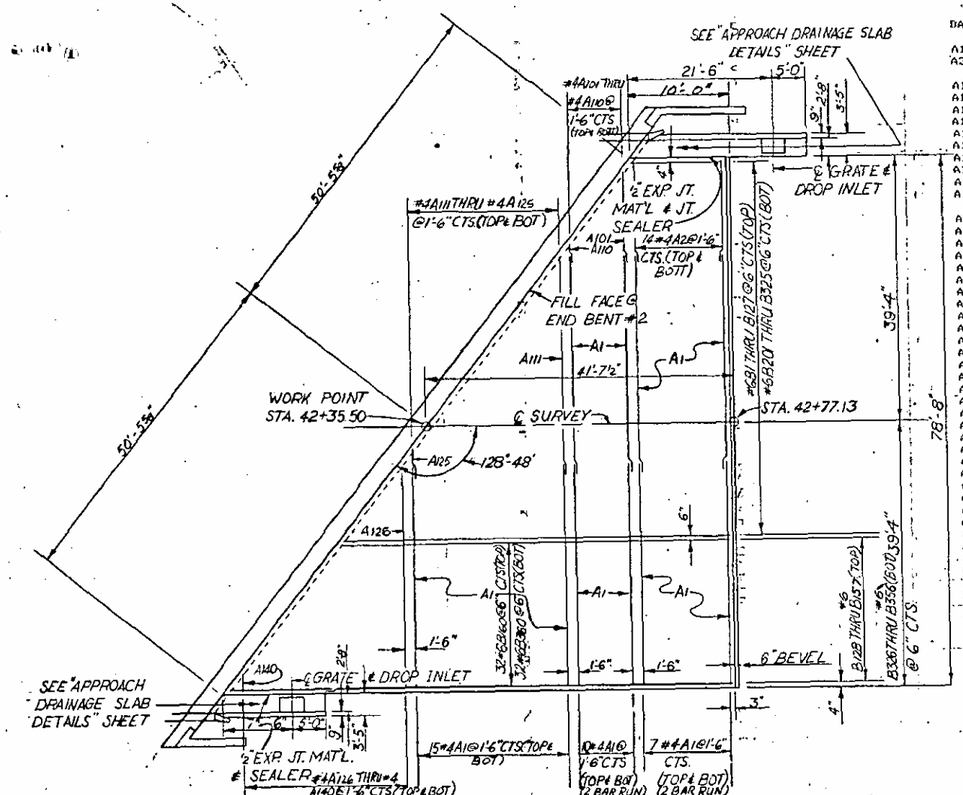

PLAN OF SLAB @ END BENT #2

BAR	NUMBR	SIZE	TYPE	LENGTH	WEIGHT
A1	49	4	STR	30- 0	982
A2	14	4	STR	20- 8	193
A101	2	4	STR	18-10	25
A102	2	4	STR	17- 0	23
A103	2	4	STR	15- 1	20
A104	2	4	STR	13- 3	18
A105	2	4	STR	11- 4	15
A106	2	4	STR	9- 6	13
A107	2	4	STR	7- 8	10
A108	2	4	STR	5- 9	8
A109	2	4	STR	3-11	5
A110	2	4	STR	2- 1	3
A111	2	4	STR	29- 0	39
A112	2	4	STR	27- 2	36
A113	2	4	STR	25- 3	34
A114	2	4	STR	23- 5	31
A115	2	4	STR	21- 7	29
A116	2	4	STR	19- 8	26
A117	2	4	STR	17-10	24
A118	2	4	STR	15-11	21
A119	2	4	STR	14- 1	19
A120	2	4	STR	12- 3	16
A121	2	4	STR	10- 4	14
A122	2	4	STR	8- 6	11
A123	2	4	STR	6- 7	9
A124	2	4	STR	4- 9	6
A125	2	4	STR	2-11	4
A126	2	4	STR	29-10	40
A127	2	4	STR	28- 0	37
A128	2	4	STR	26- 2	35
A129	2	4	STR	24- 3	32
A130	2	4	STR	22- 5	30
A131	2	4	STR	20- 6	27
A132	2	4	STR	18- 8	25
A133	2	4	STR	16-10	22
A134	2	4	STR	14-11	20
A135	2	4	STR	13- 1	17
A136	2	4	STR	11- 2	15
A137	2	4	STR	9- 4	12
A138	2	4	STR	7- 6	10
A139	2	4	STR	5- 7	7
A140	2	4	STR	3- 9	5
B1	1	6	STR	9- 3	14
B2	1	6	STR	9- 8	15
B3	1	6	STR	10- 1	15
B4	1	6	STR	10- 5	16
B5	1	6	STR	10-10	16
B6	1	6	STR	11- 3	17
B7	1	6	STR	11- 8	18
B8	1	6	STR	12- 1	18
B9	1	6	STR	12- 6	19
B10	1	6	STR	12-10	19
B11	1	6	STR	13- 3	20
B12	1	6	STR	13- 8	21
B13	1	6	STR	14- 1	21
B14	1	6	STR	14- 6	22
B15	1	6	STR	14-11	22
B16	1	6	STR	15- 3	23
B17	1	6	STR	15- 8	24
B18	1	6	STR	16- 1	24
B19	1	6	STR	16- 5	25
B20	1	6	STR	16-11	25
B21	1	6	STR	17- 3	26
B22	1	6	STR	17- 8	27
B23	1	6	STR	18- 1	27
B24	1	6	STR	18- 6	28
B25	1	6	STR	18-11	28
B26	1	6	STR	19- 3	29
B27	1	6	STR	19- 8	30
B28	1	6	STR	20- 1	30
B29	1	6	STR	20- 6	31
B30	1	6	STR	20-11	31
B31	1	6	STR	21- 4	32
B32	1	6	STR	21- 9	33
B33	1	6	STR	22- 1	33
B34	1	6	STR	22- 6	34
B35	1	6	STR	22-11	34
B36	1	6	STR	23- 4	35
B37	1	6	STR	23- 9	36
B38	1	6	STR	24- 1	36
B39	1	6	STR	24- 6	37
B40	1	6	STR	24-11	37
B41	1	6	STR	25- 4	38
B42	1	6	STR	25- 9	39
B43	1	6	STR	26- 2	39
B44	1	6	STR	26- 6	40
B45	1	6	STR	26-11	40
B46	1	6	STR	27- 4	41
B47	1	6	STR	27- 9	42
B48	1	6	STR	28- 2	42
B49	1	6	STR	28- 7	43
B50	1	6	STR	28-11	43
B51	1	6	STR	29- 4	44
B52	1	6	STR	29- 9	45
B53	1	6	STR	30- 2	45
B54	1	6	STR	30- 7	46
B55	1	6	STR	30-11	46
B56	1	6	STR	31- 4	47
B57	1	6	STR	31- 9	48
B58	1	6	STR	32- 2	48
B59	1	6	STR	32- 7	49
B60	1	6	STR	33- 0	50
B61	1	6	STR	33- 4	50
B62	1	6	STR	33- 9	51
B63	1	6	STR	34- 2	51
B64	1	6	STR	34- 7	52
B65	1	6	STR	35- 0	53
B66	1	6	STR	35- 5	53
B67	1	6	STR	35- 9	54
B68	1	6	STR	36- 2	54
B69	1	6	STR	36- 7	55
B70	1	6	STR	37- 0	56
B71	1	6	STR	37- 5	56
B72	1	6	STR	37- 9	57
B73	1	6	STR	38- 2	57
B74	1	6	STR	38- 7	58
B75	1	6	STR	39- 0	59
B76	1	6	STR	39- 5	59
B77	1	6	STR	39-10	60
B78	1	6	STR	40- 2	60
B79	1	6	STR	40- 7	61
B80	1	6	STR	41- 0	62
B81	1	6	STR	41- 5	62
B82	1	6	STR	41-10	63
B83	1	6	STR	42- 3	63
B84	1	6	STR	42- 7	64
B85	1	6	STR	43- 0	65
B86	1	6	STR	43- 5	65
B87	1	6	STR	43-10	66
B88	1	6	STR	44- 3	66
B89	1	6	STR	44- 7	67
B90	1	6	STR	45- 0	68
B91	1	6	STR	45- 5	68
B92	1	6	STR	45-10	69
B93	1	6	STR	46- 3	69
B94	1	6	STR	46- 8	70
B95	1	6	STR	47- 0	71
B96	1	6	STR	47- 5	71
B97	1	6	STR	47-10	72
B98	1	6	STR	48- 3	72
B99	1	6	STR	48- 8	73
B100	1	6	STR	49- 1	74
B101	1	6	STR	49- 5	74
B102	1	6	STR	49-10	75
B103	1	6	STR	50- 3	75
B104	1	6	STR	50- 8	76
B105	1	6	STR	51- 1	77
B106	1	6	STR	51- 6	77
B107	1	6	STR	51-10	78
B108	1	6	STR	52- 3	78
B109	1	6	STR	52- 8	79
B110	1	6	STR	53- 1	80
B111	1	6	STR	53- 6	80
B112	1	6	STR	53-10	81
B113	1	6	STR	54- 3	81
B114	1	6	STR	54- 8	82
B115	1	6	STR	55- 1	83
B116	1	6	STR	55- 6	83
B117	1	6	STR	55-11	84
B118	1	6	STR	56- 3	84
B119	1	6	STR	56- 8	85
B120	1	6	STR	57- 1	86
B121	1	6	STR	57- 6	86
B122	1	6	STR	57-11	87
B123	1	6	STR	58- 4	88
B124	1	6	STR	58- 8	88
B125	1	6	STR	59- 1	89
B126	1	6	STR	59- 6	89
B127	1	6	STR	59-11	90
B128	1	6	STR	2- 2	3
B129	1	6	STR	2- 6	4
B130	1	6	STR	2-11	4
B131	1	6	STR	3- 4	5
B132	1	6	STR	3- 9	6
B133	1	6	STR	4- 2	6
B134	1	6	STR	4- 7	7
B135	1	6	STR	4-11	7
B136	1	6	STR	5- 4	8
B137	1	6	STR	5- 9	9
B138	1	6	STR	6- 2	9
B139	1	6	STR	6- 7	10
B140	1	6	STR	7- 0	11
B141	1	6	STR	7- 4	11
B142	1	6	STR	7- 9	12
B143	1	6	STR	8- 2	12
B144	1	6	STR	8- 7	13
B145	1	6	STR	9- 0	14
B146	1	6	STR	9- 4	14
B147	1	6	STR	9- 9	15
B148	1	6	STR	10- 2	15
B149	1	6	STR	10- 7	16
B150	1	6	STR	11- 0	17
B151	1	6	STR	11- 5	17
B152	1	6	STR	11- 9	18
B153	1	6	STR	12- 2	18
B154	1	6	STR	12- 7	19
B155	1	6	STR	13- 0	20
B156	1	6	STR	13- 5	20
B157	1	6	STR	13-10	21
B160	30	6	STR	60- 0	2,704
B201	1	6	STR	9- 9	15
B202	1	6	STR	10- 2	15
B203	1	6	STR	10- 7	16
B204	1	6	STR	10-11	16
B205	1	6	STR	11- 4	17
B206	1	6	STR	11- 9	18
B207	1	6	STR	12- 2	18
B208	1	6	STR	12- 7	19
B209	1	6	STR	13- 0	20
B210	1	6	STR	13- 4	20
B211	1	6	STR	13- 9	21
B212	1	6	STR	14- 2	21
B213	1	6	STR	14- 7	22
B214	1	6	STR	15- 0	23
B215	1	6	STR	15- 5	23
B216	1	6	STR	15- 9	24
B217	1	6	STR	16- 2	24
B218	1	6	STR	16- 7	25
B219	1	6	STR	17- 0	26
B220	1	6	STR	17- 5	26
B221	1	6	STR	17- 9	27
B222	1	6	STR	18- 2	27
B223	1	6	STR	18- 7	28
B224	1	6	STR	19- 0	29
B225	1	6	STR	19- 5	29
B226	1	6	STR	19-10	30
B227	1	6	STR	20- 2	30
B228	1	6	STR	20- 7	31
B229	1	6	STR	21- 0	32
B230	1	6	STR	21- 5	32
B231	1	6	STR	21-10	33
B232	1	6	STR	22- 3	33
B233	1	6	STR	22- 7	34
B234	1	6	STR	23- 0	35
B235	1	6	STR	23- 5	35
B236	1	6	STR	23-10	36
B237	1	6	STR	24- 3	36
B238	1	6	STR	24- 7	37
B239	1	6	STR	25- 0	38
B240	1	6	STR	25- 5	38
B241	1	6	STR	25-10	39
B242	1	6	STR	26- 3	39
B243	1	6	STR	26- 8	40
B244	1	6	STR	27- 0	41
B245	1	6	STR	27- 5	41
B246	1	6	STR	27-10	42
B247	1	6	STR	28- 3	42
B248	1	6	STR	28- 8	43
B249	1	6	STR	29- 1	44
B250	1	6	STR	29- 5	44
B251	1	6	STR	29-10	45
B252	1	6	STR	30- 3	45
B253	1	6	STR	30- 8	46
B254	1	6	STR	31- 1	47
B255	1	6	STR	31- 5	47
B256	1	6	STR	31-10	48
B257	1	6	STR	32- 3	48
B258	1	6	STR	32- 8	49
B259	1	6	STR	33- 1	50
B260	1	6	STR	33- 6	50
B261	1	6	STR	33-10	51
B262	1	6	STR	34- 3	51
B263	1	6	STR	34- 8	52
B264	1	6	STR	35- 1	53
B265	1	6	STR	35- 6	53
B266	1	6	STR	35-11	54
B267	1	6	STR	36- 3	54
B268	1	6	STR	36- 8	55
B269	1	6	STR	37- 1	56
B270	1	6	STR	37- 6	56
B271	1	6	STR	37-11	57
B272	1	6	STR	38- 3	57
B273	1	6	STR	38- 8	58
B274	1	6	STR	39- 1	59
B275	1	6	STR	39- 6	59
B276	1	6	STR	39-11	60
B277	1	6	STR	40- 4	61
B278	1	6	STR	40- 8	61
B279	1	6	STR	41- 1	62
B280	1	6	STR	41- 6	62
B281	1	6	STR	41-11	63
B282	1	6	STR	42- 4	64
B283	1	6	STR	42- 9	64
B284	1	6	STR	43- 1	65
B285	1	6	STR	43- 6	65
B286	1	6	STR	43-11	66
B287	1	6	STR	44- 4	67
B288	1	6	STR	44- 9	67
B289	1	6	STR	45- 1	68
B290	1	6	STR	45- 6	68
B291	1	6	STR	45-11	69
B292	1	6	STR	46- 4	70
B293	1	6	STR	46- 9	70
B294	1	6	STR	47- 2	71
B295	1	6	STR	47- 6	71
B296	1	6	STR	47-11	72
B297	1	6	STR	48- 4	73
B298	1	6	STR	48- 9	73
B299	1	6	STR	49- 2	74
B300	1	6	STR	49- 7	74
B301	1	6	STR	49-11	75
B302	1	6	STR	50- 4	76
B303	1	6	STR	50- 9	76
B304	1	6	STR	51- 2	77
B305	1	6	STR	51- 7	77
B306	1	6	STR	52- 0	78
B307	1	6	STR	52- 4	79
B308	1	6	STR	52- 9	79
B309	1	6	STR	53- 2	80
B310	1	6	STR	53- 7	80
B311	1	6	STR	54- 0	81
B312	1	6	STR	54- 4	82
B313	1	6	STR	54- 9	82
B314	1	6	STR	55- 2	83
B315	1	6	STR	55- 7	83
B316	1	6	STR	56- 0	84
B317	1	6	STR	56- 5	85
B318	1	6	STR	56- 9	85
B319	1	6	STR	57- 2	86
B320	1	6	STR	57- 7	86
B321	1	6	STR	58- 0	87
B322	1	6	STR	58- 5	88
B323	1	6	STR	58-10	88
B324	1	6	STR	59- 2	89
B325	1	6	STR	59- 7	89
B326	1	6	STR	2- 3	3
B327	1	6	STR	2- 8	4
B328	1	6	STR	3- 0	5
B329	1	6	STR	3- 5	5
B330	1	6	STR	3-10	6
B331	1	6	STR	4- 3	6
B332	1	6	STR	4- 8	7
B333	1	6	STR	5- 1	8
B334	1	6	STR	5- 5	8
B335	1	6	STR	5-10	9
B336	1	6	STR	6- 3	9
B337	1	6	STR	6- 8	10
B338	1	6	STR	7- 1	11
B339	1	6	STR	7- 6	11
B340	1	6	STR	7-10	12
B341	1	6	STR	8- 3	12
B342	1	6	STR	8- 8	13
B343	1	6	STR	9- 1	14
B344	1	6	STR	9- 6	14
B345	1	6	STR	9-10	15
B346	1	6	STR	10- 3	15
B347	1	6	STR	10- 8	16
B348	1	6	STR	11- 1	17
B349	1	6	STR	11- 6	17
B350	1	6	STR	11-11	18
B351	1	6	STR	12- 3	18
B352	1	6	STR	12- 8	19
B353	1	6	STR	13- 1	20
B354	1	6	STR	13- 6	20
B355	1	6	STR	13-11	21
B356	1	6	STR	14- 4	22
B360	32	6	STR	60- 0	2,884
				GRAND TOTAL	21,405

BILL OF MATERIAL

BAR	NO.	SIZE	TYPE	LENGTH	WEIGHT

CLASS AA CONC 101.8 CY
CLASS A CONC 3.0 CY

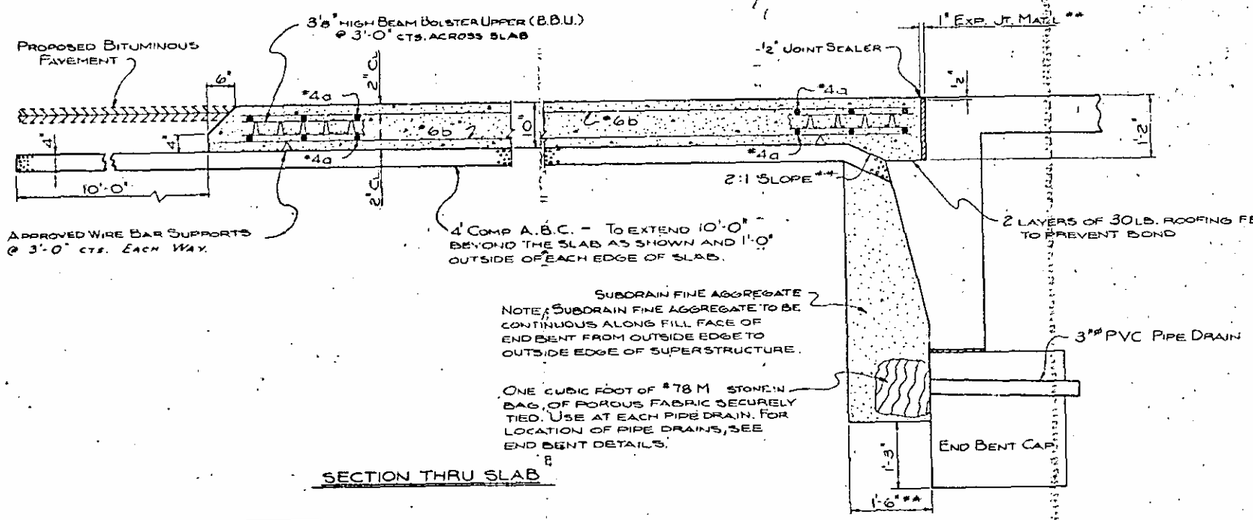

SECTION THRU SLAB

STD. DRAWN BY: K.G.P. DATE: 2-71 CHECKED BY: D.H.H.
DRAWN BY K. CRAIG DATE 10.78
CHECKED BY J.L. HOOGE DATE 12-78

REVISED FOR 1978 SPECIFICATIONS - BY K.G.P.

PROJECT NO. 8.153170.5
RANDOLPH-GUILFORD COUNTY
STATION: 590+49.33-L-LT LN

Sheet 2 of 4

STATE OF NORTH CAROLINA
STATE HIGHWAY COMMISSION
RALEIGH

BRIDGE APPROACH SLAB FOR FLEXIBLE PAVEMENT

REVISIONS						SHEET NO.
NO.	BY	DATE	NO.	BY	DATE	S-62
1						TOTAL SHEETS
2						122

STD. NO. BAS2

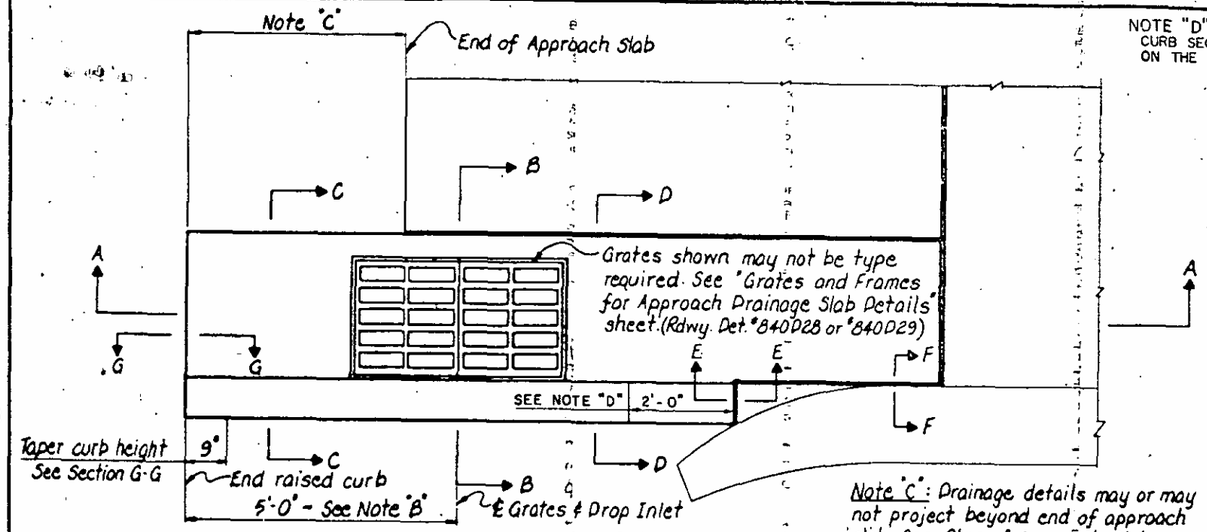

NOTE "D": CURB TO BE TRANSITIONED WITHIN THIS LENGTH FROM TYPICAL CURB SECTION SHOWN TO CURB THAT COINCIDES WITH THE CURB BLOCK ON THE CURVED END BLOCK.

TYPICAL PART PLAN

NOTE "B": DRAINAGE SLAB MAY OR MAY NOT PROJECT BEYOND END OF RAISED CURB. SEE PLAN OF APPROACH SLAB.

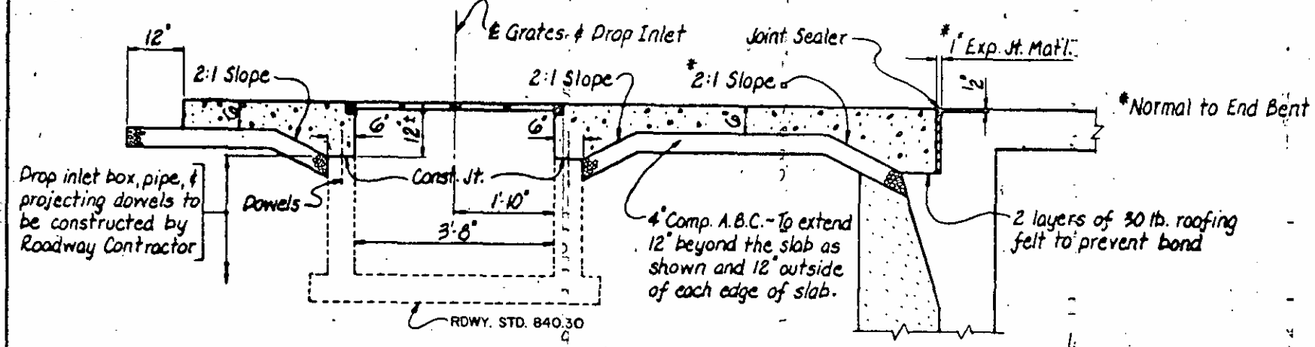

SECTION A-A

Note "A": Match slope of adjacent slab (if present) or slope as directed by the Engineer.

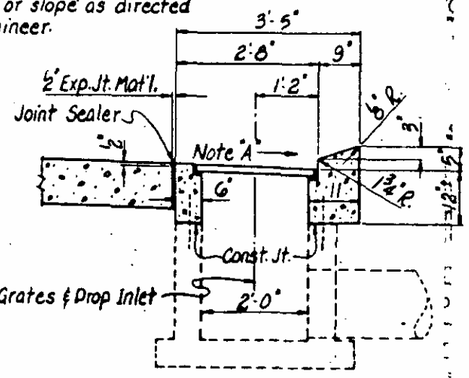

SECTION B-B

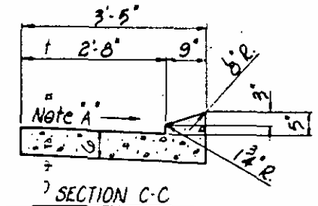

SECTION C-C

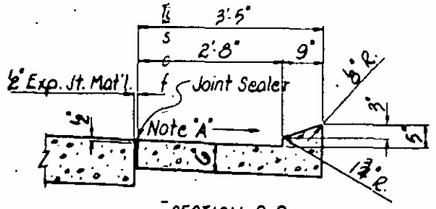

SECTION D-D

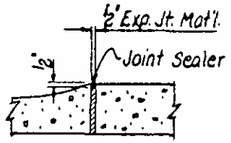

SECTION E-E

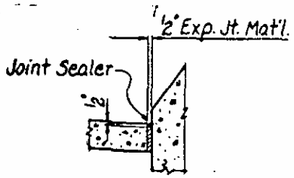

SECTION F-F

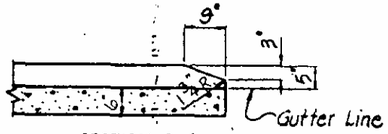

SECTION G-G

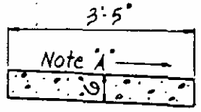

SECTION WHERE SLAB PROJECTS BEYOND END of RAISED CURB

NOTES

For requirements and payment for Approach Drainage Slab Details, see THE STANDARD SPECIFICATIONS FOR BRIDGE APPROACH SLABS.

½" Expansion joint material shall be used in Approach Drainage Slab to limit the length of pours to a maximum of 35 feet. The location of joints, where required, shall be approved by the Engineer. The expansion joint shall be sealed with joint sealer as shown in Section E-E.

The Engineer will be responsible for establishing the elevations for the Approach Drainage Slab.

PROJECT NO. B-1531/7.0.5
RANDOLPH-GUILFORD COUNTY
STATION: 590+49.33-L-LT IN
SHEET 2 of 4

STATE OF NORTH CAROLINA
DEPARTMENT OF TRANSPORTATION
RALEIGH

APPROACH DRAINAGE SLAB DETAILS

JULY 1978

REVISIONS							SHEET NO.
NO.	BY	DATE	NO.	BY	DATE		S-62
1			3				TOTAL SHEETS
2			4				122

STANDARD DRAWN BY K. Parrish DATE Feb 3 '76
STANDARD CHECKED BY [illegible] DATE Feb 3 '76
DRAWN BY [illegible] DATE 12/78
CHECKED BY [illegible] DATE 1/79

Revised 7-31-78 By: R.E.K. V.B.: R.D.U.

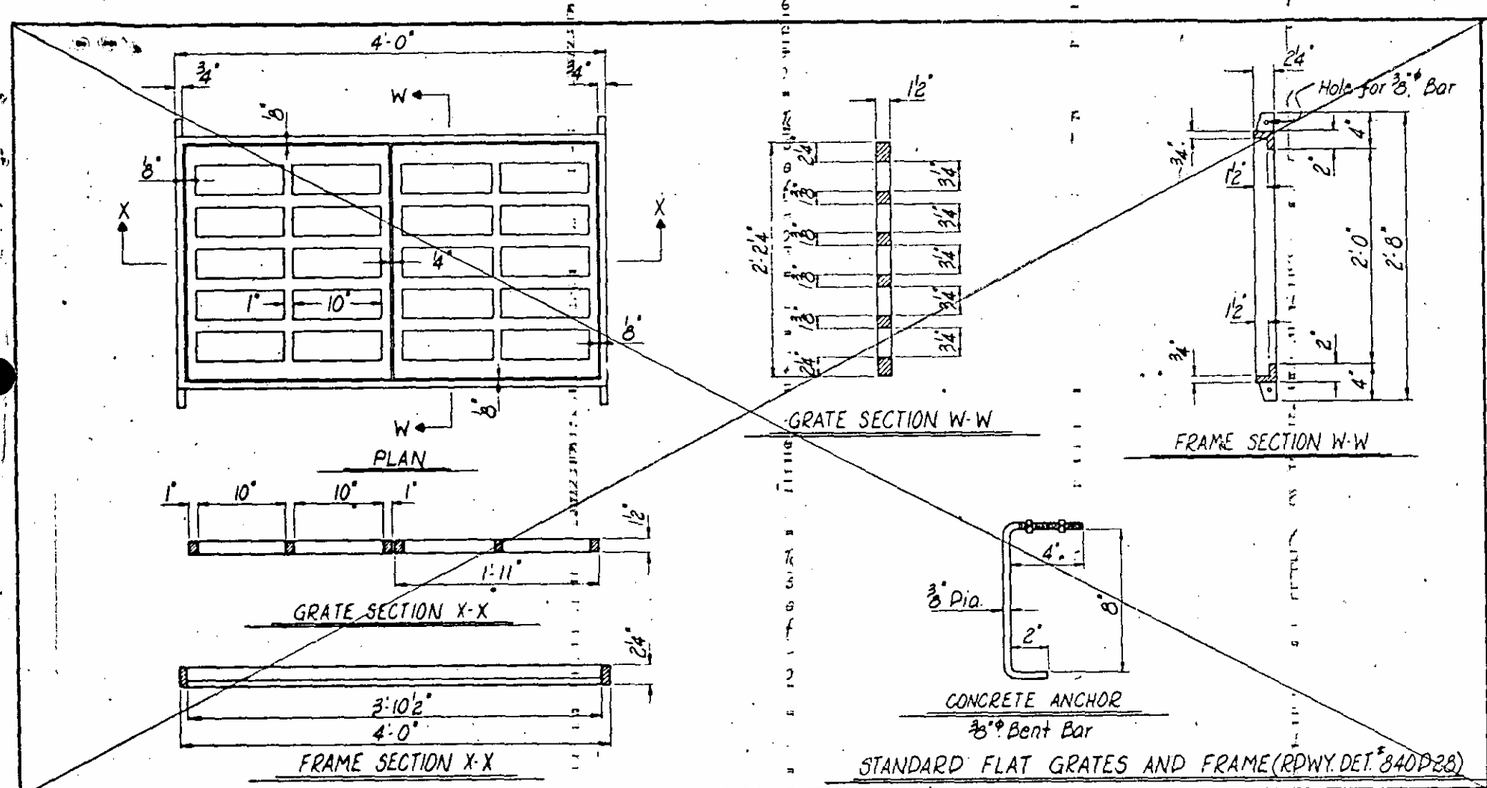

STANDARD FLAT GRATES AND FRAME (RDWY. DET. #840D28)

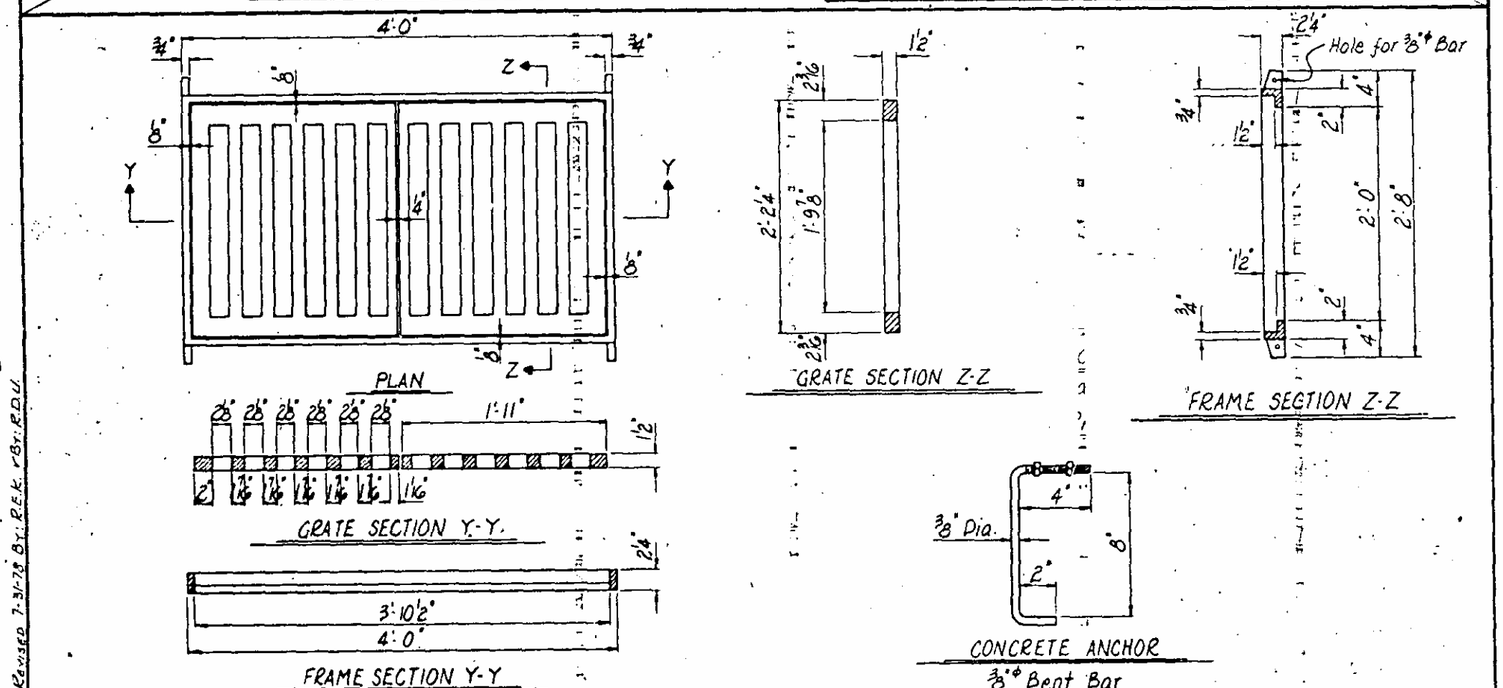

NARROW SLOT FLAT GRATES AND FRAME (RDWY. DET. #840D29)

STD. DRAWN BY: L.R. Powell 2-19-76 BY: K.G.P.
DRAWN BY: A. FAIG DATE: 2/25
CHECKED BY: W. HOOVE DATE: 1-29

REVISED 7-31-78 BY: R.E.K. BY: R.D.U.

PROJECT NO. 8.1531705
RANDOLPH GUILFORD COUNTY
STATION: 590+49.33-L-LT. LN.
SHEET 4 of 4

STATE OF NORTH CAROLINA
DEPARTMENT OF TRANSPORTATION
RALEIGH

GRATES AND FRAMES FOR APPROACH DRAINAGE SLAB

JULY

REVISIONS						
NO.	BY	DATE	NO.	BY	DATE	
1			3			
2			4			

STD. NO. BA54