Docusign Envelope ID: A5CD3527-E0C7-479A-BD07-904BA235C5A3

PROJECT REFERENCE NO.	SHEET NO.
U-6011	2C-2

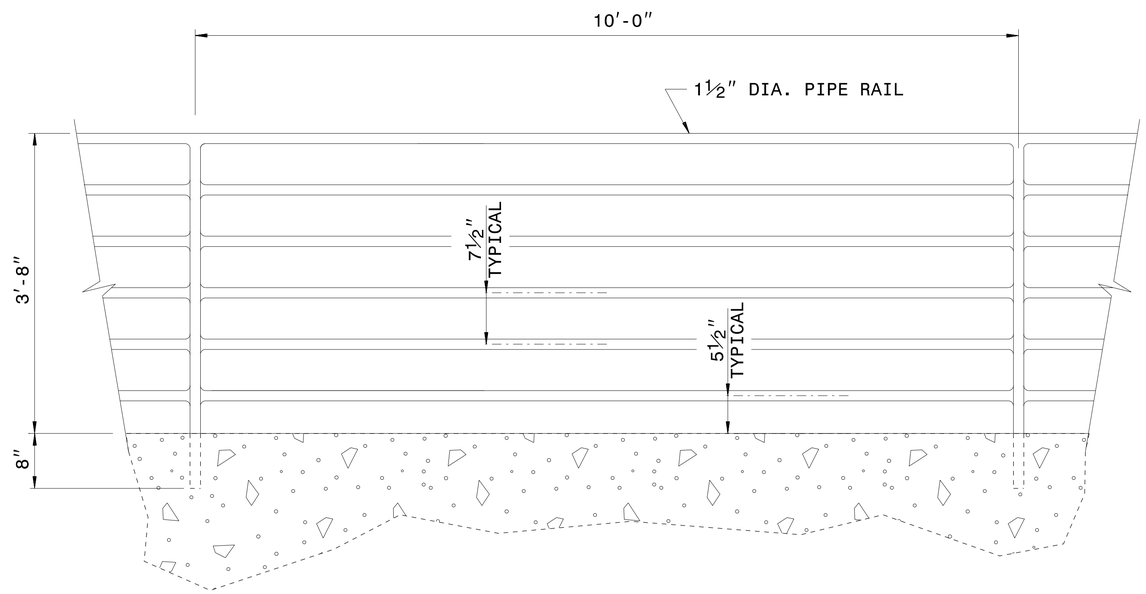

ELEVATION OF HANDRAIL

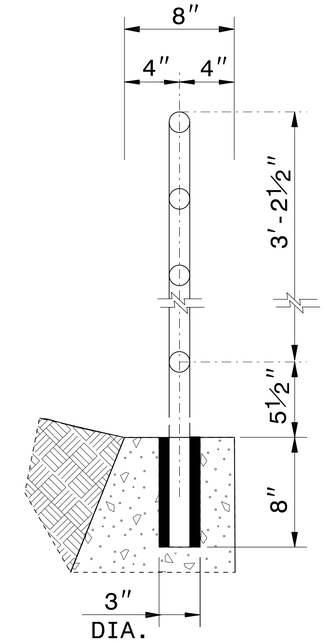

INSET 'A'

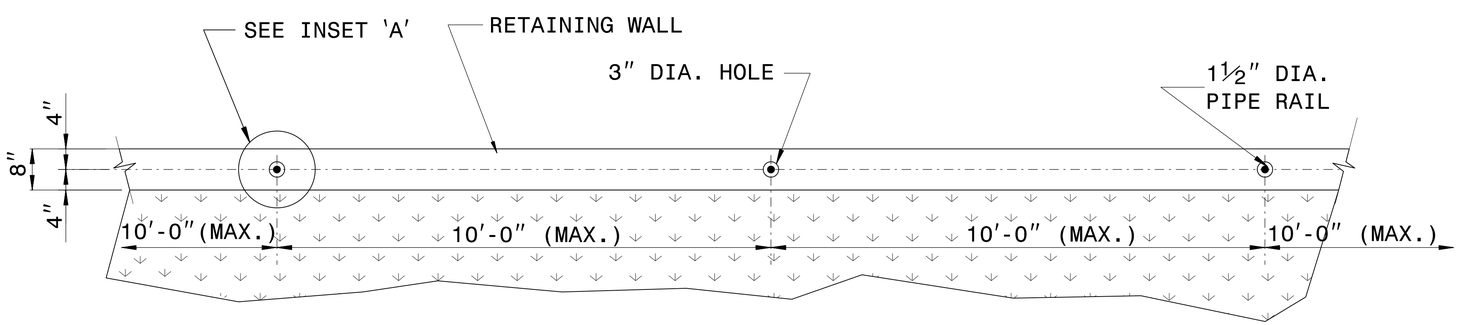

PLAN VIEW

NOTES:

CONSTRUCT PROPOSED STEEL PIPE RAIL 1½" DIAMETER SCHEDULE 40 PLAIN END GALVANIZED STEEL PIPE MEETING THE REQUIREMENTS OF ASTM A53.

EMBED PIPE RAIL 8" INTO PROPOSED WALL WITH CHEMICAL OR CONCRETE GROUT ANCHORING SYSTEM AS DIRECTED BY THE ENGINEER.

REPAIR GALVANIZING IN ACCORDANCE WITH SECTION 1076 OF THE NCDOT STANDARD SPECIFICATIONS.

PAINT, IF REQUIRED BY THE ENGINEER, IN ACCORDANCE WITH SECTION 1080 OF THE STANDARD SPECIFICATIONS.

CENTER THE PROPOSED RAILING ON TOP OF THE WALL WITH POST SPACING SYMMETRICAL ABOUT THE CENTER-LINE OF THE WALL.

USE A ROTARY DRILL IF NEEDED FOR EMBEDMENT HOLES OF RAIL IN WALL. ROTARY DRILL ONLY (NO ROTARY-IMPACT DRILLS).

WELD IN ACCORDANCE WITH ARTICLE 1072-18 OF THE STANDARD SPECIFICATIONS.

CONTRACT STANDARDS AND DEVELOPMENT UNIT
Office 919-707-6950 FAX 919-250-4119

DETAIL OF PIPE HANDRAIL MOUNTED ON RETAINING WALL

ORIGINAL BY: E.E. WARD DATE: 12-99
MODIFIED BY: DATE:
CHECKED BY: DATE:
FILE SPEC.: jhowerton/handrail on retaining wall.dgn

$$$$$SYSTIME$$$$$
$$$$$$$$$$$$$$$$DGN$$$$$$$$$$$$$$$$$$
$$$$$USERNAME$$$$