DocuSign Envelope ID: B358E748-7193-44C2-93F7-21A459CC563B

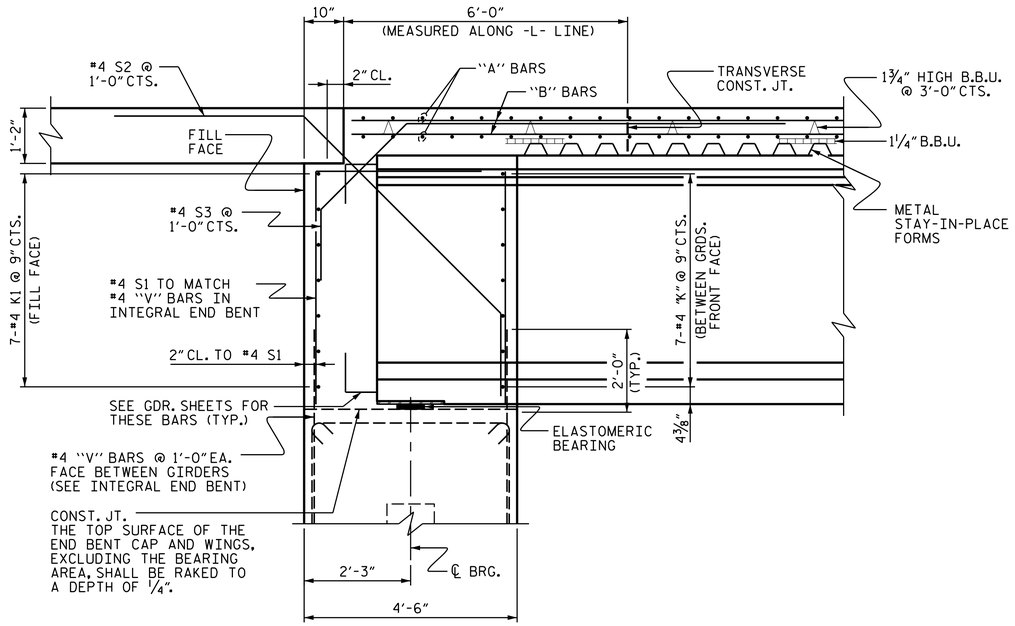

SECTION THRU
INTEGRAL END BENT

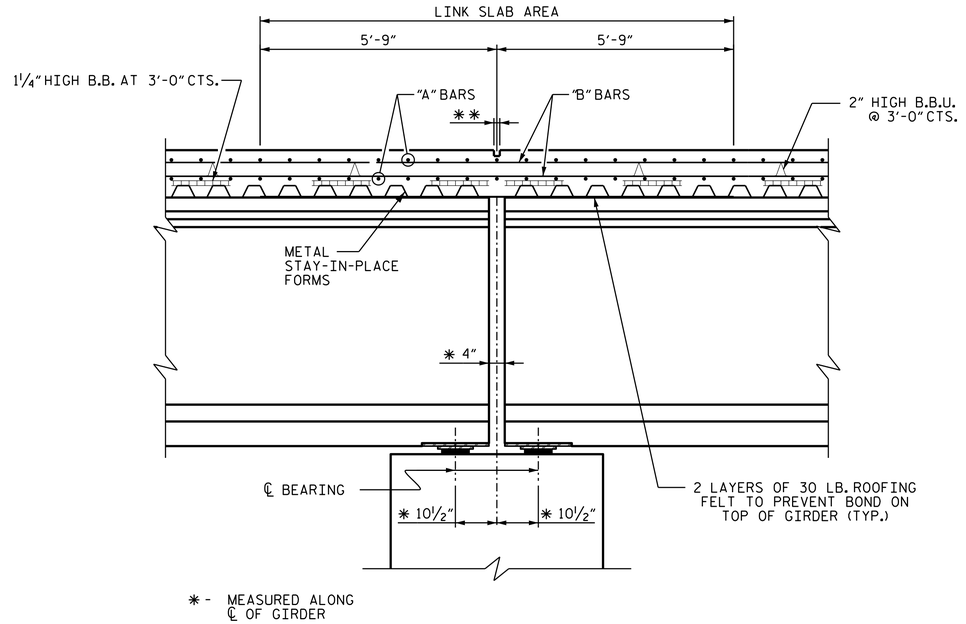

* - MEASURED ALONG ℄ OF GIRDER

SECTION THRU
LINK SLAB

** A 1½" DEEP, ⅜" WIDE CONTRACTION JOINT SHALL BE SAWN WITHIN 24 HOURS OF POURING THE DECK. THE JOINT SHALL BE FILLED WITH JOINT SEALER MATERIAL. THE JOINT SEALER MATERIAL SHALL CONFORM TO THE REQUIREMENTS OF SECTION 1028-3 OF THE STANDARD SPECIFICATIONS.

NOTE: THE TOP OF THE GIRDER IN THE REGION OF THE LINK SLAB SHALL BE SMOOTH (NOT RAKED) AND FREE OF STIRRUPS, DECK FORMWORK ATTACHMENTS AND OVERHANG FALSEWORK/FORMWORK ATTACHMENTS.

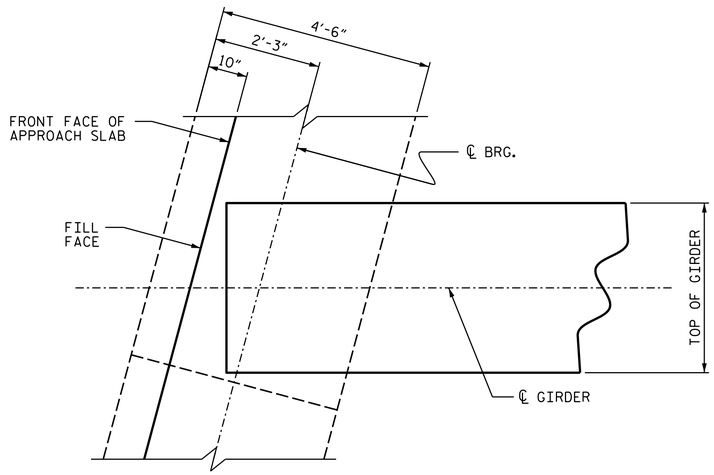

PLAN OF GIRDER
AT INTEGRAL END BENT

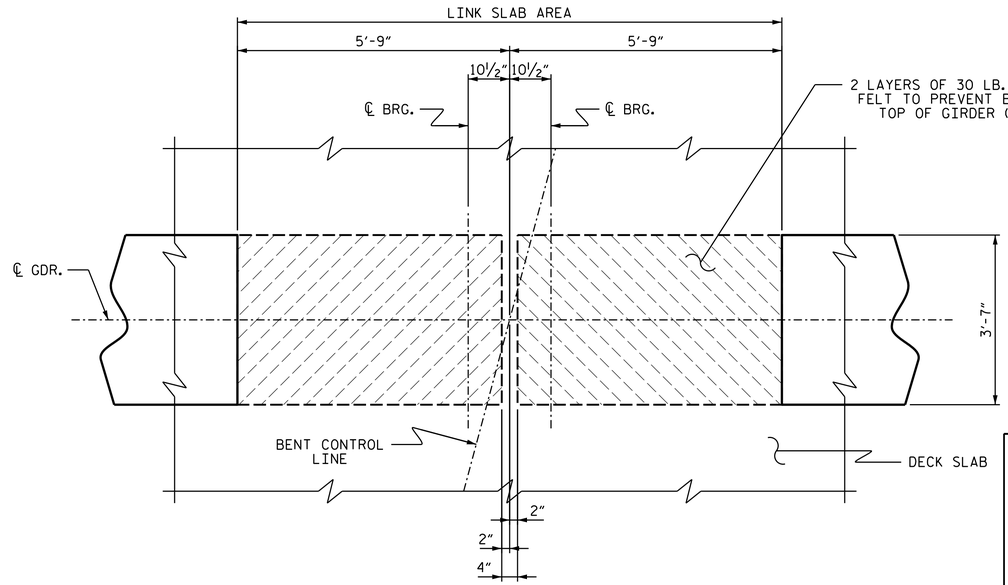

PLAN OF GIRDER
AT BENT

PROJECT NO. B-5845
CLEVELAND COUNTY
STATION: 22+56.00-L-

SHEET 4 OF 4

NORTH CAROLINA PROFESSIONAL ENGINEER SEAL 20125 MARSHALL G. CHEEK, JR.
6/27/2024

STATE OF NORTH CAROLINA
DEPARTMENT OF TRANSPORTATION
RALEIGH
SUPERSTRUCTURE

TYPICAL SECTION DETAILS

DOCUMENT NOT CONSIDERED FINAL UNLESS ALL SIGNATURES COMPLETED

TGS ENGINEERS
201 W. MARION ST STE 200
SHELBY, NC 28150
PH (704) 476-0003
CORP. LICENSE NO.: C-0275

REVISIONS						SHEET NO.
NO.	BY:	DATE:	NO.	BY:	DATE:	S-10
1			3			TOTAL SHEETS
2			4			40

DRAWN BY :	JLA	DATE :	4/22
CHECKED BY :	MGC	DATE :	4/22
DESIGN ENGINEER OF RECORD :	MGC	DATE :	8/22