Docusign Envelope ID: A4CF3904-C1F0-4F5E-B547-D040FEF9BA0D

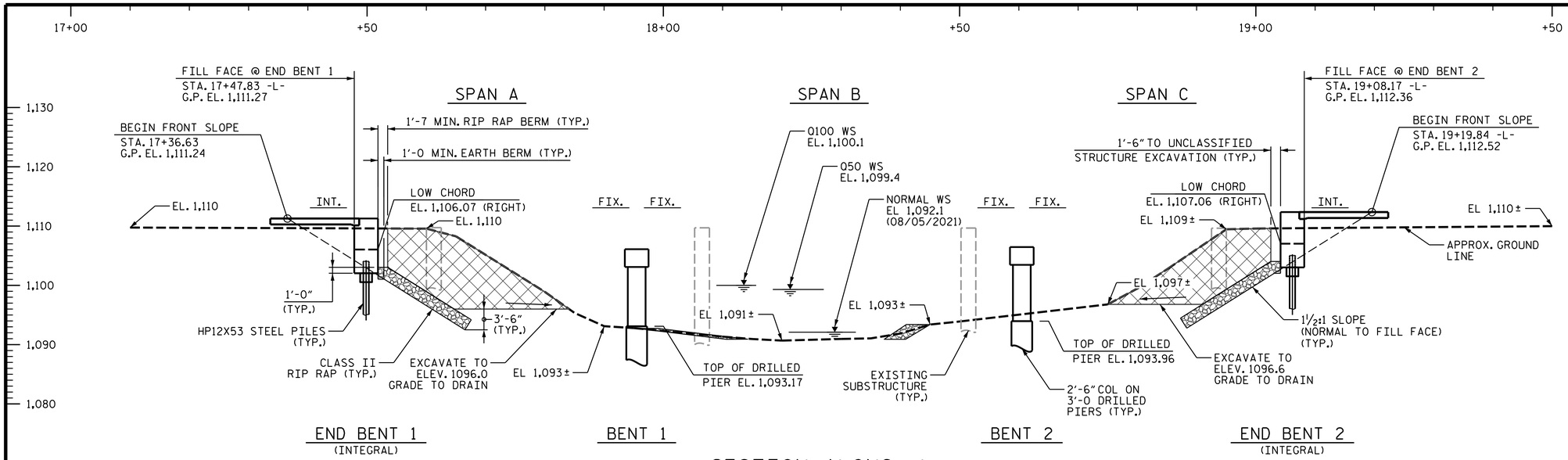

SECTION ALONG -L-

(SECTION TAKEN AT RIGHT ANGLES TO END BENTS AND BENTS)

UNCLASSIFIED STRUCTURE EXCAVATION

(+)0.3000% (+)6.0259%

PI STA = 21+20.00 -L-
EL = 1,112.39
VC = 660'

GRADE DATA -L-

HYDRAULIC DATA

DESIGN DISCHARGE	3200 CFS
FREQUENCY OF DESIGN FLOOD	50 YRS.
DESIGN HIGH WATER ELEVATION	1099.4
DRAINAGE AREA	14.2 SQ.MI.
BASE DISCHARGE (Q100)	3800 CFS
BASE HIGH WATER ELEVATION	1,100.1

OVERTOPPING FLOOD DATA

OVERTOPPING FLOOD DISCHARGE	18,000 CFS
FREQUENCY OF OVERTOPPING FLOOD	500+ YRS.
OVERTOPPING FLOOD ELEVATION @ STA. 10+65.00 -L-	1,111.1

I HEREBY CERTIFY THESE PLANS
ARE THE AS-BUILT PLANS

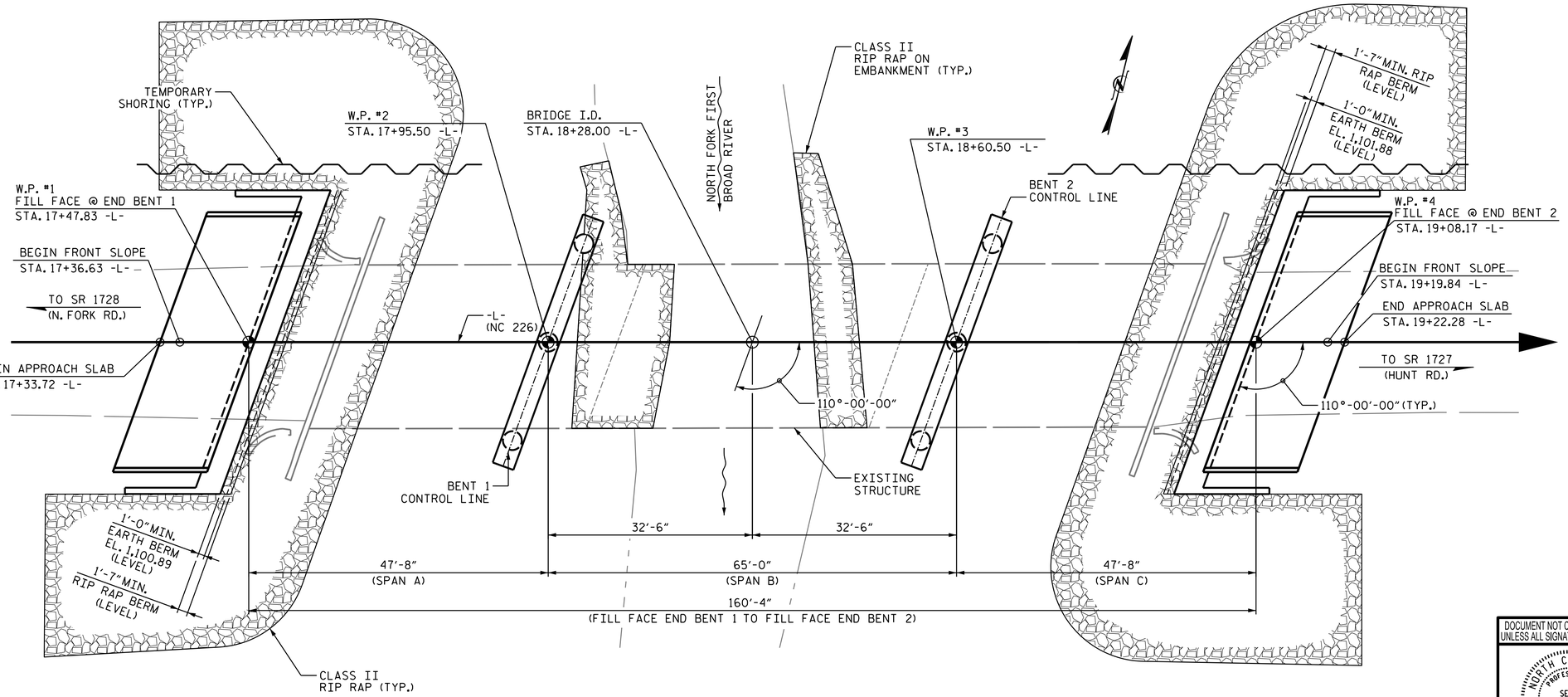

PLAN

(FOR CLARITY, PILES ARE NOT SHOWN IN PLAN VIEW)

PROJECT NO. BR-0100
RUTHERFORD COUNTY
STATION: 18+28.00 -L-

SHEET 1 OF 4 REPLACES BRIDGE NO. 800040

STATE OF NORTH CAROLINA
DEPARTMENT OF TRANSPORTATION
RALEIGH

GENERAL DRAWING

FOR BRIDGE OVER NORTH FORK
FIRST BROAD RIVER ON NC 226
BETWEEN SR 1728 & SR 1727

DESIGNED BY:	J. WHEATLEY	DATE :	MAY 2024
DRAWN BY:	M. HOBBS	DATE :	MAY 2024
CHECKED BY:	E. LAWES	DATE :	MAY 2024
DESIGN ENGINEER OF RECORD:	ELIZABETH F. LAWES	DATE :	MAY 2024

WSP USA Inc.
434 FAYETTEVILLE STREET
SUITE 1500
RALEIGH, NC 27601
TEL: 1.919.836.4040

LICENSE NO. F-0165

DOCUMENT NOT CONSIDERED FINAL UNLESS ALL SIGNATURES COMPLETED

NORTH CAROLINA PROFESSIONAL SEAL 044167 ENGINEER ELIZABETH F. LAWES

DocuSigned by: Elizabeth F. Lawes
935E642239E2F7B...
6/27/2024

REVISIONS								SHEET NO.
NO.	BY:	DATE:	NO.	BY:	DATE:			S-1
1			3					TOTAL SHEETS
2			4					30

6/3/2024
J:\30900678R.BR-0100\BR-0100\Structures\2.0 Drafting\DGNs\401_001_BR100_SMU_GD1.dgn
USEL722989