DocuSign Envelope ID: CA3653D1-D373-4301-B436-E45514B173A6

PROJECT REFERENCE NO.	SHEET NO.
U-6202	Sig. 15.1

18 CHANNEL CONFLICT MONITOR PROGRAMMING DETAIL

(remove jumpers and set switches as shown)

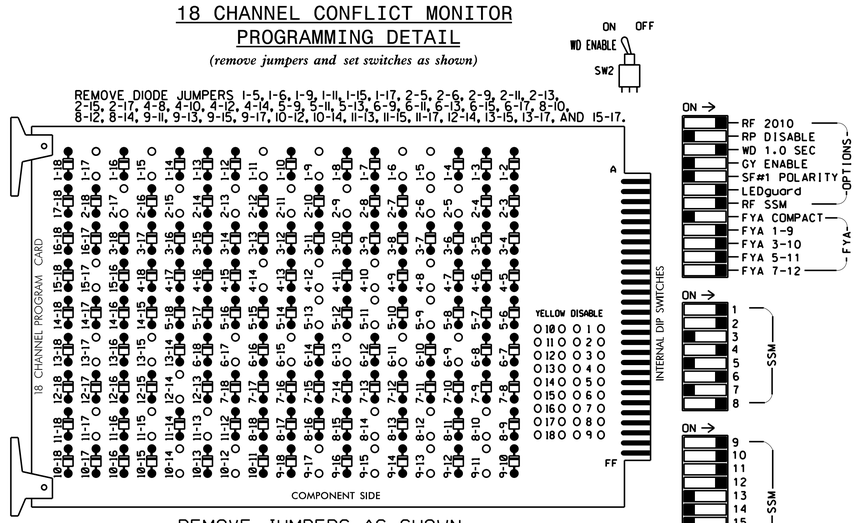

REMOVE JUMPERS AS SHOWN

■ = DENOTES POSITION OF SWITCH

NOTES:

1. Card is provided with all diode jumpers in place. Removal of any jumper allows its channels to run concurrently.
2. Ensure jumpers SEL2-SEL5 are present on the monitor board.
3. Ensure that Red Enable is active at all times during normal operation.
4. Connect serial cable from conflict monitor to comm. port 1 of 2070 controller. Ensure conflict monitor communicates with 2070.

NOTES

1. To prevent "flash-conflict" problems, insert red flash program blocks for all unused vehicle load switches in the output file. The installer shall verify that signal heads flash in accordance with the Signal Plans.
2. Program phases 4 and 8 for Dual Entry.
3. Enable Simultaneous Gap-Out for all Phases.
4. Program phases 2 and 6 for Variable Initial and Gap Reduction.
5. Program phases 2 and 6 for Startup In Green.
6. Program phases 2 and 6 for Yellow Flash, and overlaps 1, 2 and 5 as Wag Overlaps.
7. The cabinet and controller are part of the Wilmington Signal System.

EQUIPMENT INFORMATION

CONTROLLER.....2070
CABINET.....332 W/ AUX
SOFTWARE.....ECONOLITE OASIS
CABINET MOUNT.....BASE
OUTPUT FILE POSITIONS...18 WITH AUX. OUTPUT FILE
LOAD SWITCHES USED.....S1,S2,S3,S5,S6,S7,S8,S9,S11, AUX S1,AUX S2,AUX S3,AUX S4,AUX S5
PHASES USED.....1,2,2 PED,4,4 PED,5,6,6 PED,8
OVERLAP "A".....1+2
OVERLAP "B".....4
OVERLAP "C".....5+6
OVERLAP "D".....8
OVERLAP "E".....6

SIGNAL HEAD HOOK-UP CHART

LOAD SWITCH NO.	S1		S2	S3	S4	S5	S6	S7	S8	S9	S10	S11	S12	AUX S1	AUX S2	AUX S3	AUX S4	AUX S5	AUX S6
CMU CHANNEL NO.	1		2	13	3	4	14	5	6	15	7	8	16	9	10	17	11	12	18
PHASE	1		2	2 PED	3	4	4 PED	5	6	6 PED	7	8	8 PED	OLA	OLB	OLE	OLC	OLD	OLF
SIGNAL HEAD NO.	11★	83	21,22	P21, P22	NU	42,43	P41, P42	51★	61,62	P61, P62	NU	82,83	NU	11★	81★	63★	51★	41★	NU
RED		✱	128			101			134			107				A111			
YELLOW			129			102			135			108							
GREEN			130			103			136			109							
RED ARROW														A121	A124		A114	A101	
YELLOW ARROW		126						✱						A122	A125	A112	A115	A102	
FLASHING YELLOW ARROW														A123	A126	A113	A116	A103	
GREEN ARROW	127	127						133											
✋				113			104			119									
🚶				115			106			121									

NU = Not Used
✱ Denotes install load resistor. See load resistor installation detail this sheet.
★ See pictorial of head wiring in detail this sheet.
NOTE: Load switch AUX S3 requires output remapping. See sheet 6 of this electrical detail for instructions.

INPUT FILE POSITION LAYOUT

(front view)

		1	2	3	4	5	6	7	8	9	10	11	12	13	14
FILE "I"	U	Ø 1 1A	SLOT EMPTY	SLOT EMPTY	SLOT EMPTY	SLOT EMPTY	SLOT EMPTY	SLOT EMPTY	SLOT EMPTY	SLOT EMPTY	SLOT EMPTY	SLOT EMPTY	Ø 2PED DC ISOLATOR	Ø 6PED DC ISOLATOR	FS DC ISOLATOR
	L	NOT USED											Ø 4PED DC ISOLATOR	NOT USED	ST DC ISOLATOR
FILE "J"	U	Ø 5 5A	SLOT EMPTY	SLOT EMPTY	SLOT EMPTY	SLOT EMPTY	SLOT EMPTY	SLOT EMPTY	SLOT EMPTY	SLOT EMPTY	SLOT EMPTY	SLOT EMPTY	SLOT EMPTY	SLOT EMPTY	SLOT EMPTY
	L	NOT USED													

EX.: 1A, 2A, ETC. = LOOP NO.'S

FS = FLASH SENSE
ST = STOP TIME

INPUT FILE CONNECTION & PROGRAMMING CHART

LOOP NO.	LOOP TERMINAL	INPUT FILE POS.	PIN NO.	INPUT ASSIGNMENT NO.	DETECTOR NO.	NEMA PHASE	CALL	EXTEND	FULL TIME DELAY	STRETCH TIME	DELAY TIME
1A	TB2-1,2	I1U	56	18	1	1	Y	Y			15
	-	J4U	48	10★	26	6	Y	Y			
	-	I1U	56	18★	51	1	Y	Y			
5A	TB3-1,2	J1U	55	17	5	5	Y	Y			15
	-	I4U	47	9★	22	2	Y	Y			
	-	J1U	55	17★	55	5	Y	Y			
PED PUSH BUTTONS											
P21,P22	TB8-4,6	I12U	67	29	PED 2	2 PED					
P41,P42	TB8-5,6	I12L	69	31	PED 4	4 PED					
P61,P62	TB8-7,9	I13U	68	30	PED 6	6 PED					

NOTE:
INSTALL DC ISOLATORS IN INPUT FILE SLOTS I12 AND I13.

★ See Input Page Assignment programming details on sheets 3 and 4.

INPUT FILE POSITION LEGEND: J2L
FILE J
SLOT 2
LOWER

FYA SIGNAL WIRING DETAIL

(wire signal heads as shown)

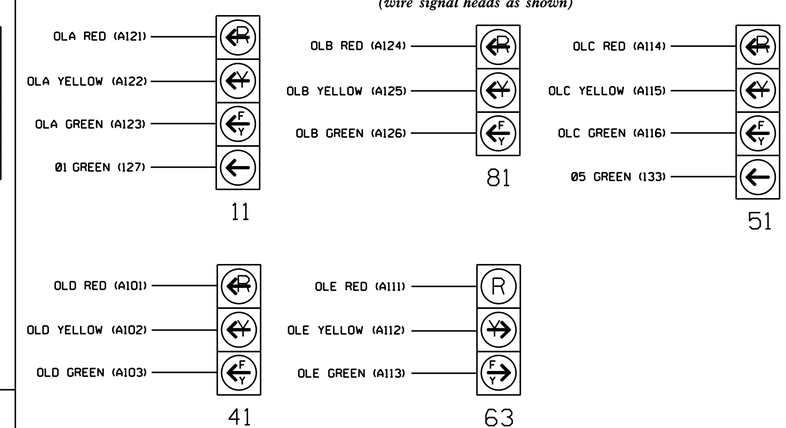

NOTE

The sequence display for signal heads 11 and 51 requires special logic programming. See sheet 2 for programming instructions.

SPECIAL DETECTOR NOTE

Install a multizone microwave detection system for vehicle detection. Perform installation according to manufacturer's directions and NCDOT engineer-approved mounting locations to accomplish detection schemes shown on the Signal Design Plans.

COUNTDOWN PEDESTRIAN SIGNAL OPERATION

Countdown Ped Signals are required to display timing only during Ped Clearance Interval. Consult Ped Signal Module user's manual for instructions on selecting this feature.

LOAD RESISTOR INSTALLATION DETAIL

(install resistors as shown below)

ACCEPTABLE VALUES

VALUE (ohms)	WATTAGE
1.5K - 1.9K	25W (min)
2.0K - 3.0K	10W (min)

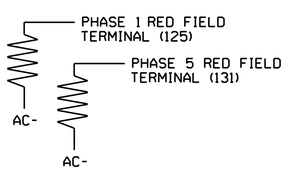

Signal Upgrade - Final Design
Electrical Detail - Sheet 1 of 6

DOCUMENT NOT CONSIDERED FINAL UNLESS ALL SIGNATURES COMPLETED

THIS ELECTRICAL DETAIL IS FOR
THE SIGNAL DESIGN: 03-0840
DESIGNED: May 2022
SEALED: 5/17/2024
REVISED:

HNTB NORTH CAROLINA, P.C.
343 E. Six Forks Road, Suite 200
Raleigh, North Carolina 27609
NC License No: C-1554
(919) 546-8997

ELECTRICAL AND PROGRAMMING DETAILS FOR:

Prepared in the Offices of:
Transportation Mobility and Safety Division
STATE OF NORTH CAROLINA DEPARTMENT OF TRANSPORTATION
Traffic Engineering & Signals Management Section
750 N.Greenfield Pkwy,Garner,NC 27529

SR 2048 (Gordon Rd)
at
SR 2117 (Harris Rd)

Division 3 New Hanover County Wilmington

PLAN DATE:	August 2023	REVIEWED BY:	N.K. Vlanich
PREPARED BY:	E.E. Tiller	REVIEWED BY:	N.R. Simmons

REVISIONS	INIT.	DATE

SEAL
NORTH CAROLINA PROFESSIONAL SEAL 031464 ENGINEER NATASHA R. SIMMONS

DocuSigned by: Natasha R Simmons
SIGNATURE 5/17/2024 DATE
SIG. INVENTORY NO. 03-0840