DocuSign Envelope ID: DDD4A9FA-2485-47CC-96B8-C4C7B7354B22

18 CHANNEL CONFLICT MONITOR PROGRAMMING DETAIL

(remove jumpers and set switches as shown)

REMOVE DIODE JUMPERS 1-5, 1-6, 1-9, 1-11, 2-5, 2-6, 2-9, 2-11, 3-7, 3-8, 3-10, 3-12, 4-7, 4-8, 4-10, 4-12, 5-9, 5-11, 6-9, 6-11, 7-10, 7-12, 8-10, 8-12, 9-11, and 10-12

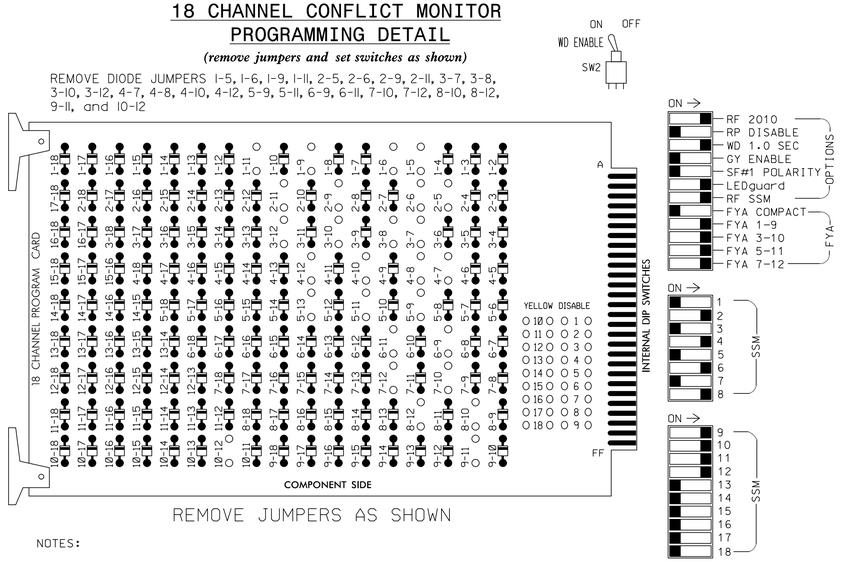

REMOVE JUMPERS AS SHOWN

NOTES:

1. Card is provided with all diode jumpers in place. Removal of any jumper allows its channels to run concurrently.
2. Ensure jumpers SEL2-SEL5 and SEL9 are present on the monitor board.
3. Ensure that Red Enable is active at all times during normal operation.
4. Connect serial cable from conflict monitor to comm. port 1 of 2070 controller. Ensure conflict monitor communicates with 2070.

NOTES

1. To prevent "flash-conflict" problems, insert red flash program blocks for all unused vehicle load switches in the output file. The installer shall verify that signal heads flash in accordance with the signal plan.
2. Program phases 4 and 8 for Dual Entry.
3. Program controller to start up in phase 2 Green No Walk and 6 Green No Walk.
4. If this signal will be managed by an ATMS software, enable controller and detector logging for all detectors used at this location.

SIGNAL HEAD HOOK-UP CHART

LOAD SWITCH NO.	S1	S2	S3	S4	S5	S6	S7	S8	S9	S10	S11	S12	AUX S1	AUX S2	AUX S3	AUX S4	AUX S5	AUX S6
CMU CHANNEL NO.	1	2	13	3	4	14	5	6	15	7	8	16	9	10	17	11	12	18
PHASE	1	2	2 PED	3	4	4 PED	5	6	6 PED	7	8	8 PED	OL1	OL2	SPARE	OL3	OL4	SPARE
SIGNAL HEAD NO.	11 ★	21,22	NU	31 ★	41,42 43	NU	51 ★	61,62	NU	71,72 ★	81,82	NU	11 ★	31 ★	NU	51 ★	71,72 ★	NU
RED		128			101			134			107							
YELLOW	✳	129		✳	102		✳	135		✳	108							
GREEN		130			103			136			109							
RED ARROW													A121	A124		A114	A101	
YELLOW ARROW													A122	A125		A115	A102	
FLASHING YELLOW ARROW													A123	A126		A116	A103	
GREEN ARROW	127			118			133			124								
✋																		
🚶																		

NU = Not Used

✳ Denotes install load resistor. See load resistor installation detail this sheet.

★ See pictorial of head wiring in detail this sheet.

EQUIPMENT INFORMATION

Controller.....2070LX
Cabinet.....332 w/ Aux
Software.....Q-Free MAXTIME
Cabinet Mount.....Base
Output File Positions.....18 With Aux. Output File
Load Switches Used.....S1,S2,S4,S5,S7,S8,S10,S11, AUX S1, AUX S2, AUX S4, AUX S5
Phases Used.....1,2,3,4,5,6,7,8
Overlap "1".....*
Overlap "2".....*
Overlap "3".....*
Overlap "4".....*

*See overlap programming detail on sheet 2

FYA SIGNAL WIRING DETAIL

(wire signal heads as shown)

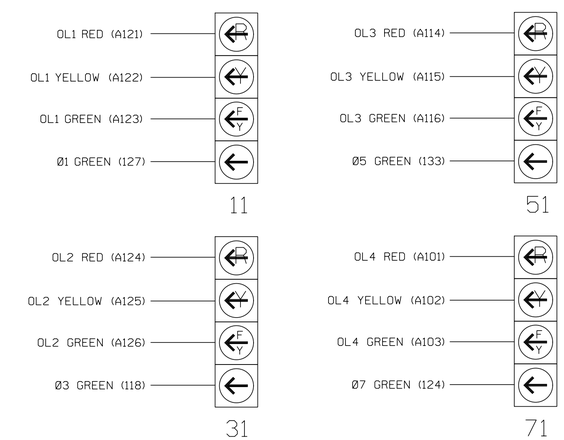

INPUT FILE CONNECTION & PROGRAMMING CHART

LOOP NO.	LOOP TERMINAL	INPUT FILE POS.	PIN NO.	INPUT POINT	DETECTOR NO.	CALL PHASE	DELAY TIME	EXTEND TIME	EXTEND	ADDED INITIAL	CALL	DELAY DURING GREEN
1A	TB2-1,2	I1U	56	18	1 ★	1	15.0		X		X	
				-	29 ★	6	3.0		X		X	X
2A	TB2-5,6	I2U	39	1	2	2			X	X	X	
3A	TB4-5,6	I5U	58	20	7 ★	3	15.0		X		X	
				-	30 ★	8	3.0		X		X	
4A	TB4-9,10	I6U	41	3	8	4	5.0	2.0	X		X	X
4B	TB4-11,12	I6L	45	7	9	4			X		X	
5A	TB3-1,2	J1U	55	17	15 ★	5	15.0		X		X	
				-	31 ★	2	3.0		X		X	X
6A	TB3-5,6	J2U	40	2	16	6			X	X	X	
7A	TB5-5,6	J5U	57	19	21 ★	7	15.0		X		X	
				-	32 ★	4	3.0		X		X	
8A	TB5-9,10	J6U	42	4	22	8	5.0	2.0	X		X	X
8B	TB5-11,12	J6L	46	8	23	8			X		X	

★ For the detectors to work as shown on the signal design plan, see the Vehicle Detector Setup Programming Detail for Alternate Phasing on sheet 2.

INPUT FILE POSITION LEGEND: J2L
- FILE J
- SLOT 2
- LOWER

INPUT FILE POSITION LAYOUT

(front view)

	1	2	3	4	5	6	7	8	9	10	11	12	13	14
FILE "I" UPPER	Ø1 1A	Ø2 2A	SLOT EMPTY	SLOT EMPTY	Ø3 3A	Ø4 4A	SLOT EMPTY	SLOT EMPTY	SLOT EMPTY	SLOT EMPTY	SLOT EMPTY	SLOT EMPTY	SLOT EMPTY	FS DC ISOLATOR
FILE "I" LOWER	NOT USED	NOT USED			NOT USED	Ø4 4B								ST DC ISOLATOR
FILE "J" UPPER	Ø5 5A	Ø6 6A	SLOT EMPTY	SLOT EMPTY	Ø7 7A	Ø8 8A	SLOT EMPTY	SLOT EMPTY	SLOT EMPTY	SLOT EMPTY	SLOT EMPTY	SLOT EMPTY	SLOT EMPTY	SLOT EMPTY
FILE "J" LOWER	NOT USED	NOT USED			NOT USED	Ø8 8B								

EX.: 1A, 2A, ETC. = LOOP NO.'S

FS = FLASH SENSE
ST = STOP TIME

LOAD RESISTOR INSTALLATION DETAIL

(install resistors as shown below)

ACCEPTABLE VALUES

VALUE (ohms)	WATTAGE
1.5K - 1.9K	25W (min)
2.0K - 3.0K	10W (min)

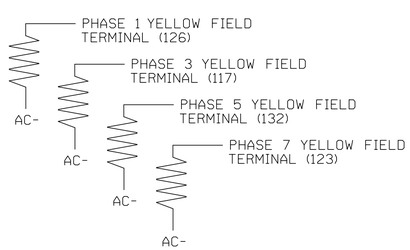

THIS ELECTRICAL DETAIL IS FOR
THE SIGNAL DESIGN: 10-2352
DESIGNED: AUGUST 2023
SEALED: 04/29/2024
REVISED: N/A

New Installation
Electrical Detail - Sheet 1 of 2

DOCUMENT NOT CONSIDERED FINAL UNLESS ALL SIGNATURES COMPLETED

ELECTRICAL AND PROGRAMMING DETAILS FOR:

SR 1009 (East John Street) at SR 3440 (McKee Road)/ Campus Ridge Road

Division 10 Mecklenburg County Matthews

PLAN DATE: August 2023	REVIEWED BY: SL Phillips
PREPARED BY: SP Pennington	REVIEWED BY:

REVISIONS	INIT.	DATE

Prepared for: Traffic Engineering, Mobility and Safety Division, Signals Management Section, NORTH CAROLINA DEPARTMENT OF TRANSPORTATION

750 N.Greenfield Pkwy,Garner,NC 27529

SEAL

NORTH CAROLINA PROFESSIONAL SEAL 032607 ENGINEER STACIE L. PHILLIPS

DocuSigned by: 4/29/2024
C6B7A56ED6D0437...
DATE

SIG. INVENTORY NO. 10-2352

4/29/2024 3:31:44 PM Gabriella.Pierro K:\MCHL_PRJ\M011036426 - McKee Rd Ext\Signal\54 - Signal Design\7.1 10-2352_2023el.dgn