DocuSign Envelope ID: 01BFE048-0172-483D-84BB-AD2BA04925FD

18 CHANNEL IP CONFLICT MONITOR PROGRAMMING DETAIL

(remove jumpers and set switches as shown)

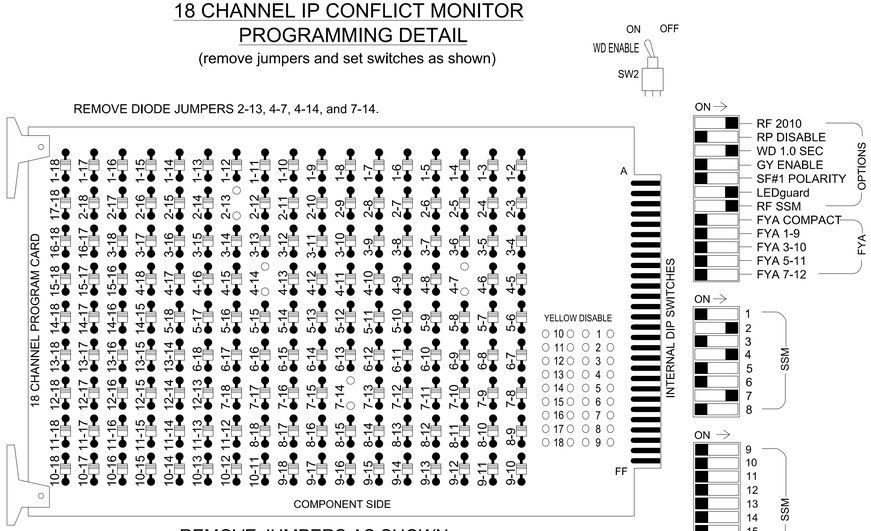

REMOVE JUMPERS AS SHOWN

NOTES:

1. Card is provided with all diode jumpers in place. Removal of any jumper allows its channels to run concurrently.
2. Ensure jumpers SEL2-SEL5 and SEL9 are present on the monitor board.
3. Ensure that the Red Enable is active at all times during normal operation.
4. Integrate monitor with Ethernet network in cabinet.

■ = DENOTES POSITION OF SWITCH

NOTES

1. To prevent "flash-conflict" problems, insert red flash program blocks for all unused vehicle load switches in the output file. The installer shall verify that signal heads flash in accordance with the signal plan.
2. Program phases 4 and 7 for Dual Entry.
3. Program controller to start up in phase 2 Green No Walk and 6 Phase Not On.
4. If this signal will be managed by an ATMS software, enable controller and detector logging for all detectors used at this location.
5. The cabinet and controller are part of the NC 150 D12-02_Mooresville CLS.

EQUIPMENT INFORMATION

Controller.....2070LX
Cabinet.....332 w/ Aux
Software.....Q-Free MAXTIME
Cabinet Mount.....Base
Output File Positions.....18 With Aux. Output File
Load Switches Used.....S2, S3, S5, S6, S10
Phases Used.....2, 2PED, 4. 4PED, 7
Overlap "1".....NOT USED
Overlap "2".....NOT USED
Overlap "3".....NOT USED
Overlap "4".....NOT USED

PROJECT REFERENCE NO.	SHEET NO.
R-2307B	Sig. 85.1

SIGNAL HEAD HOOK-UP CHART

LOAD SWITCH NO.	S1	S2		S3	S4	S5	S6	S7	S8	S9	S10	S11	S12	AUX S1	AUX S2	AUX S3	AUX S4	AUX S5	AUX S6
CMU CHANNEL NO.	1	2		13	3	4	14	5	6	15	7	8	16	9	10	17	11	12	18
PHASE	1	2		2 PED	3	4	4 PED	5	6	6 PED	7	8	8 PED	OL1	OL2	SPARE	OL3	OL4	SPARE
SIGNAL HEAD NO.	NU	21	22,23	P21, P22, P23, P24	NU	41,42 43,44	P41, P42	NU	NU	NU	71,72	NU	NU	NU	NU	NU	NU	NU	NU
RED		128	128			101													
YELLOW		129	129																
GREEN			130																
RED ARROW											122								
YELLOW ARROW						102					123								
GREEN ARROW		130				103					124								
✋				113			104												
🚶				115			106												

NU = Not Used

COUNTDOWN PEDESTRIAN SIGNAL OPERATION

Countdown Ped Signals are required to display timing only during Ped Clearance Interval. Consult Ped Signal Module user's manual for instructions on selecting this feature.

INPUT FILE POSITION LAYOUT

(front view)

		1	2	3	4	5	6	7	8	9	10	11	12	13	14
FILE "I"	U	SLOT EMPTY	∅ 2 2A	∅ 2 2C	SLOT EMPTY	SLOT EMPTY	∅ 4 4A	∅ 4 4C	SLOT EMPTY	SYS. DET. S22	SLOT EMPTY	SLOT EMPTY	∅ 2 PED DC ISOLATOR	SLOT EMPTY	FS DC ISOLATOR
	L		∅ 2 2B	NOT USED			∅ 4 4B	NOT USED		SYS. DET. S23			∅ 4 PED DC ISOLATOR		ST DC ISOLATOR
FILE "J"	U	SLOT EMPTY	SLOT EMPTY	SLOT EMPTY	SLOT EMPTY	∅ 7 7A	∅ 7 7B	SLOT EMPTY	SLOT EMPTY	SYS. DET. S24	SLOT EMPTY	SLOT EMPTY	SLOT EMPTY	SLOT EMPTY	SLOT EMPTY
	L					NOT USED	NOT USED			NOT USED					

EX. : 1A, 2A, ETC. = LOOP NO.'S

FS = FLASH SENSE
ST = STOP TIME

INPUT FILE CONNECTION & PROGRAMMING CHART

LOOP NO.	LOOP TERMINAL	INPUT FILE POS.	PIN NO.	INPUT POINT	DETECTOR NO.	CALL PHASE	DELAY TIME	EXTEND TIME	EXTEND	ADDED INITIAL	CALL	DELAY DURING GREEN
2A	TB2-5,6	I2U	39	1	2	2			X	X	X	
2B	TB2-7,8	I2L	43	5	3	2			X	X	X	
2C	TB2-9,10	I3U	63	29	4	2			X	X	X	
4A	TB4-9,10	I6U	41	3	8	4			X		X	
4B	TB4-11,12	I6L	45	7	9	4			X		X	
4C	TB6-1,2	I7U	65	31	10	4			X		X	
7A	TB5-5,6	J5U	57	19	21	7			X		X	
7B	TB5-9,10	J6U	42	4	22	7			X		X	
*S22	TB6-9,10	I9U	60	22	13	SYS			X		X	
*S23	TB6-11,12	I9L	62	24	14	SYS			X		X	
*S24	TB7-9,10	J9U	59	21	27	SYS			X		X	
PED PUSH BUTTONS												
P21,P22,P23,P24	TB8-4,6	I12U	67	33	2	PED 2						
P41,P42	TB8-5,6	I12L	69	35	4	PED 4						

*System detector only. Remove any assigned vehicle phase.

NOTE: INSTALL DC ISOLATORS IN INPUT FILE SLOT I12.

INPUT FILE POSITION LEGEND: J2L
FILE J
SLOT 2
LOWER

THIS ELECTRICAL DETAIL IS FOR THE SIGNAL DESIGN: 12-1846
DESIGNED: MAY 2024
SEALED: 5/20/2024
REVISED: N/A

Final Design
Electrical Detail

DOCUMENT NOT CONSIDERED FINAL UNLESS ALL SIGNATURES COMPLETED

Stantec
Stantec Consulting Services Inc.
801 Jones Franklin Road-Suite 300
Raleigh, NC 27606
Tel. (919) 851-6866
Fax. (919) 851-7024
www.stantec.com
License No. F-0672

ELECTRICAL AND PROGRAMMING DETAILS FOR:

Prepared for the Offices of:
Transportation Mobility and Safety Division
STATE OF NORTH CAROLINA
DEPARTMENT OF TRANSPORTATION
ITS & Signals Management Section
750 N. Greenfield Pkwy, Garner, NC 27529

NC 150 EB
at
SR 1116 (Talbert Road)
Division 12 Iredell County Mooresville

PLAN DATE: May 2024 REVIEWED BY: J Galloway, PE
PREPARED BY: R M Muncey REVIEWED BY: R Muncey, PE

REVISIONS	INIT.	DATE

SEAL 029904 NORTH CAROLINA PROFESSIONAL ENGINEER JASON P. GALLOWAY

DocuSigned by: Jason Galloway 5/20/2024
10D1E2B40B4B46E... DATE
SIG. INVENTORY NO. 12-1846

11:16:47 AM
U:\Traffic\Projects\Design\Electrical Details\Final Design\MAXTIME\R-2307B_sm_ele_12-1846.dgn
User:jgalloway

DocuSign Envelope ID: 01BFE048-0172-483D-84BB-AD2BA04925FD

Design Loading for METAL POLE NO. 1, MAST ARM A

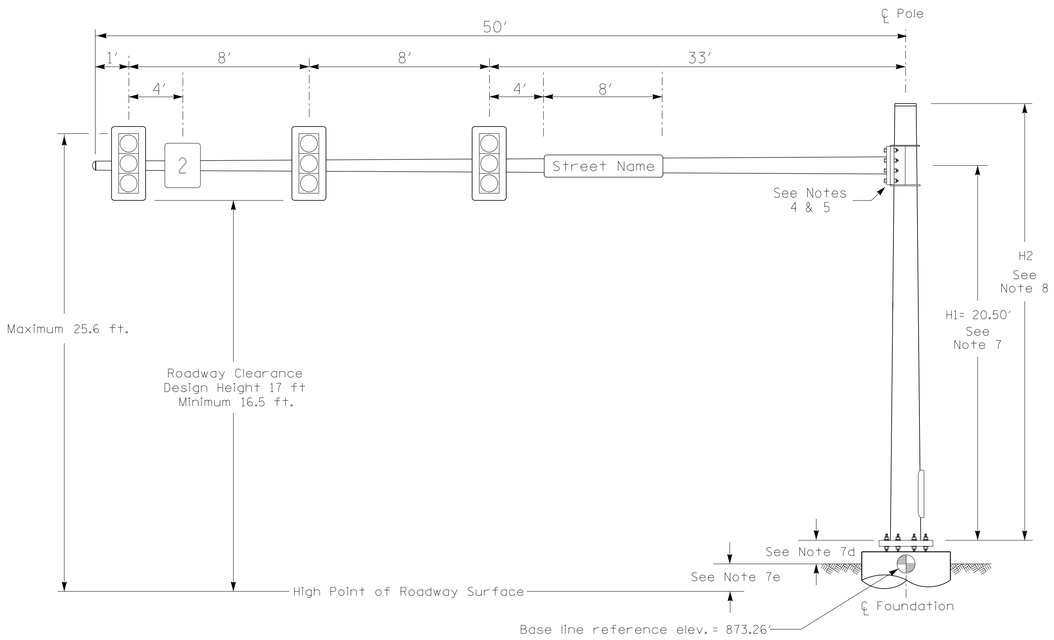

Elevation View

Design Loading for METAL POLE NO. 1, MAST ARM B

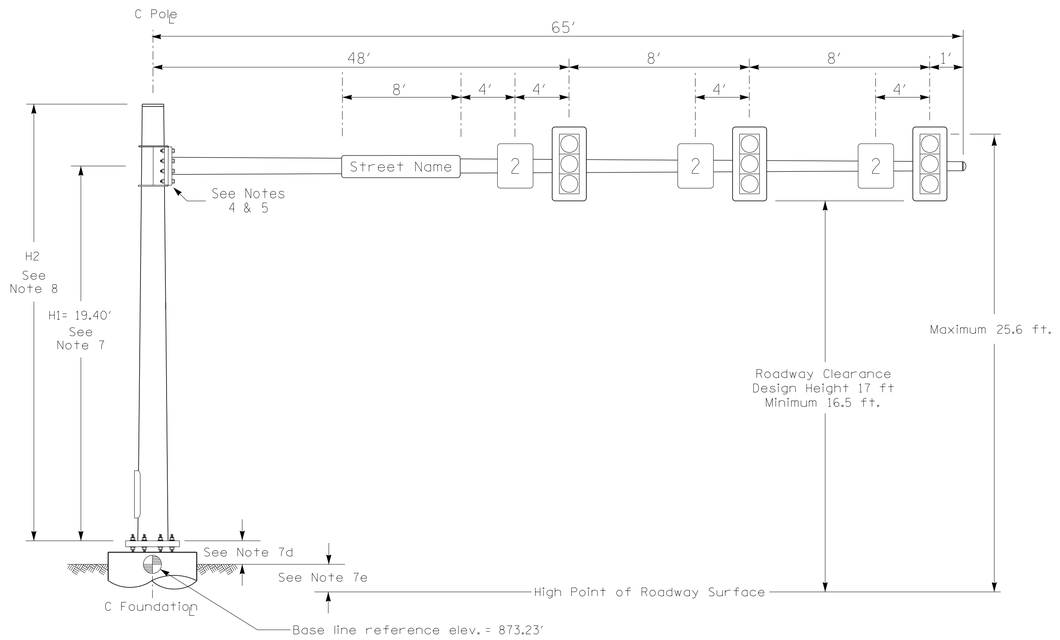

Elevation View

SPECIAL NOTE

The contractor is responsible for verifying that the mast arm attachment height (H1) will provide the "Design Height" clearance from the roadway before submitting final shop drawings for approval. Verify elevation data below which was obtained by field measurement or from available project survey data.

Elevation Data for Mast Arm Attachment (H1)

Elevation Differences for:	Arm A	Arm B
Baseline reference point at ℄ Foundation @ ground level	873.23 ft.	873.23 ft.
Elevation difference at High point of roadway surface	+1.43 ft.	+0.32 ft.
Elevation difference at Edge of travelway or face of curb	+/-0.0 ft.	+/-0.0 ft.

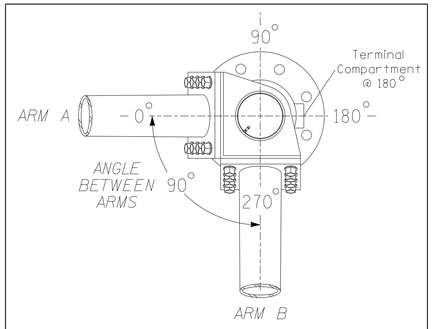

POLE RADIAL ORIENTATION

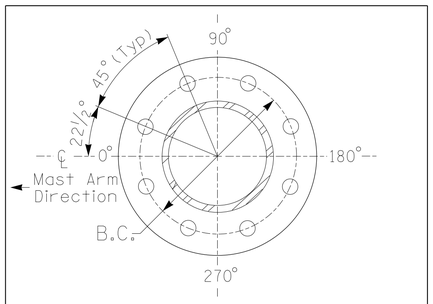

8 BOLT BASE PLATE DETAIL

See Note 6

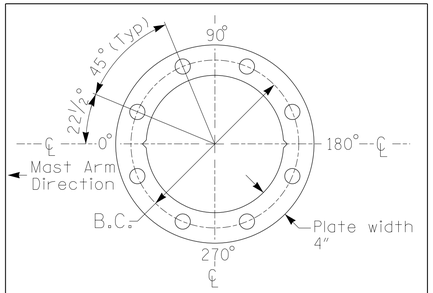

BASE PLATE TEMPLATE & ANCHOR BOLT LOCK PLATE DETAIL
For 8 Bolt Base Plate

METAL POLE No. 1

PROJECT REFERENCE NO.	SHEET NO.
R-2307B	Sig. 85.2

MAST ARM LOADING SCHEDULE

LOADING SYMBOL	DESCRIPTION	AREA	SIZE	WEIGHT
	RIGID MOUNTED SIGNAL HEAD 12″-3 SECTION-WITH BACKPLATE	9.3 S.F.	25.5″W X 52.5″L	60 LBS
2	SIGN RIGID MOUNTED	7.5 S.F.	30.0″W X 36.0″L	14 LBS
Street Name	STREET NAME SIGN RIGID MOUNTED	16.0 S.F.	24.0″W X 96.0″L	36 LBS

NOTES

DESIGN REFERENCE MATERIAL

1. Design the traffic signal structure and foundation in accordance with:
   - The 1st Edition 2015 AASHTO LRFD "Standard Specifications for Structural Supports for Highway Signs, Luminaires, and Traffic Signals, including all of the latest interim revisions.
   - The 2024 NCDOT "Standard Specifications for Roads and Structures." The latest addenda to the specifications can be found in the traffic signal project special provisions.
   - The 2024 NCDOT Roadway Standard Drawings.
   - The traffic signal project plans and special provisions.
   - The NCDOT "Metal Pole Standards" located at the following NCDOT website: https://connect.ncdot.gov/resources/safety/Pages/ITS-Design-Resources.aspx

DESIGN REQUIREMENTS

2. Design the traffic signal structure using the loading conditions shown in the elevation views. These are anticipated worst case "design loads" and may not represent the actual loads that will be applied at the time of the installation. The contractor should refer to the traffic signal plans for the actual loads that will be applied at the time of the installation.
3. Design all signal supports using force ratios that do not exceed 0.9.
4. The camber design for the mast arm deflection should provide an appearance of a low pitched arch where the tip or the free end of the mast arm does not deflect below horizontal when fully loaded.
5. A clamp-type bolted mast arm-to-pole connection may be used instead of the welded ring stiffened box connection shown as long as the connection meets all of the design requirements.
6. Design base plate with 8 anchor bolt holes. Provide 2 inch x 60 inch anchor bolts.
7. The mast arm attachment height (H1) shown is based on the following design assumptions:
   a. Mast arm slope and deflection are not considered in determining the arm attachment height as they are assumed to offset each other.
   b. Signal heads are rigidly mounted and vertically centered on the mast arm.
   c. The roadway clearance height for design is as shown in the elevation views.
   d. The top of the pole base plate is 0.75 feet above the ground elevation.
   e. Refer to the Elevation Data Chart for the elevation differences between the proposed foundation ground level and the high point of the roadway.
8. The pole manufacturer will determine the total height (H2) of each pole using the greater of the following:
   - Mast arm attachment height (H1) plus 2 feet, or
   - H1 plus 1/2 of the total height of the mast arm attachment assembly plus 1 foot.
9. If pole location adjustments are required, the contractor must gain approval from the Engineer as this may affect the mast arm lengths and arm attachment heights. The contractor may contact the Signal Design Section Senior Structural Engineer for assistance at (919) 814-5000.
10. The contractor is responsible for verifying that the mast arm length shown will allow proper positioning of the signal heads over the roadway.
11. The contractor is responsible for providing soil penetration testing data (SPT) to the pole manufacturer so site specific foundations can be designed.

NCDOT Wind Zone 5 (110 mph)

Stantec

DOCUMENT NOT CONSIDERED FINAL UNLESS ALL SIGNATURES COMPLETED

Prepared for the Offices of:
Transportation Mobility and Safety Division
NORTH CAROLINA DEPARTMENT OF TRANSPORTATION
Signal Design Section

750 N.Greenfield Pkwy.,Garner,NC 27529

NC 150 WB
at
SR 1116 (Talbert Road)

Division 12 Iredell County Mooresville

PLAN DATE: November 2023 REVIEWED BY: J. Galloway, PE
PREPARED BY: J. Hambright REVIEWED BY: R. Muncey, PE

SCALE
0 N/A
N/A

REVISIONS	INIT.	DATE

NORTH CAROLINA PROFESSIONAL SEAL 029904 ENGINEER JASON P. GALLOWAY

DocuSigned by: Jason Galloway 5/20/2024
10D1E2B40B4B46E...

SIG. INVENTORY NO. 12-1846

5/17/2024
11:17:38 AM
User:jgalloway
User:jgalloway
N:\Traffic\Signals\Design\Metal Poles\Loading Diagrams\Loading Diagram_Single Mast Arm_12-1846.dgn

DocuSign Envelope ID: 01BFE048-0172-483D-84BB-AD2BA04925FD

PROJECT REFERENCE NO.	SHEET NO.
R-2307B	Sig. 86.0

PHASING DIAGRAM

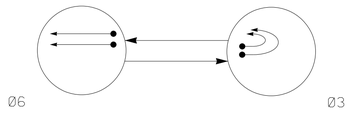

PHASING DIAGRAM DETECTION LEGEND

- DETECTED MOVEMENT
- UNDETECTED MOVEMENT (OVERLAP)
- UNSIGNALIZED MOVEMENT
- PEDESTRIAN MOVEMENT

TABLE OF OPERATION

SIGNAL FACE	PHASE Ø6	PHASE Ø3	PHASE FLASH
31,32	(R)	↶	(R)
61	↑	R	R
62	G	R	R

SIGNAL FACE I.D.

All Heads L.E.D.

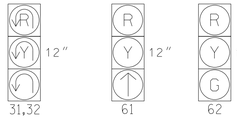

MAXTIME DETECTOR INSTALLATION CHART

DETECTOR					PROGRAMMING							
LOOP	SIZE (FT)	DISTANCE FROM STOPBAR (FT)	TURNS	NEW LOOP	CALL PHASE	DELAY TIME	EXTEND TIME	EXTEND	ADDED INITIAL	CALL	DELAY DURING GREEN	NEW CARD
3A	6X40	0	✳	✳	3	-	-	X	-	X	-	✳
3B	6X40	0	✳	✳	3	-	-	X	-	X	-	✳
6A	6X6	300	✳	✳	6	-	-	X	-	X	-	✳
6B	6X6	300	✳	✳	6	-	-	X	-	X	-	✳
6C	6X40	0	✳	✳	6	5.0	2.0	X	-	X	X	✳
6D	6X40	0	✳	✳	6	5.0	2.0	X	-	X	X	✳

✳ Video Detection Area
Camera locations should be confirmed in the field by the contractor in order to provide detection of the areas indicated.

2 Phase
Fully Actuated
NC 150 D12-02_MOORESVILLE
CLS

NOTES

1. Refer to "Roadway Standard Drawings NCDOT" dated January 2024 and "Standard Specifications for Roads and Structures" dated January 2024.
2. Do not program signal for late night flashing operation unless otherwise directed by the Engineer.
3. Set all detector units to presence mode.
4. Locate new cabinet so as not to obstruct sight distance of vehicles turning right on red.
5. The cabinet should be designed to include an Auxiliary Output File for future use.
6. Maximum times shown in timing chart are for free-run operation only. Coordinated signal system timing values supersede these values.
7. Field adjust temporary poles as needed.

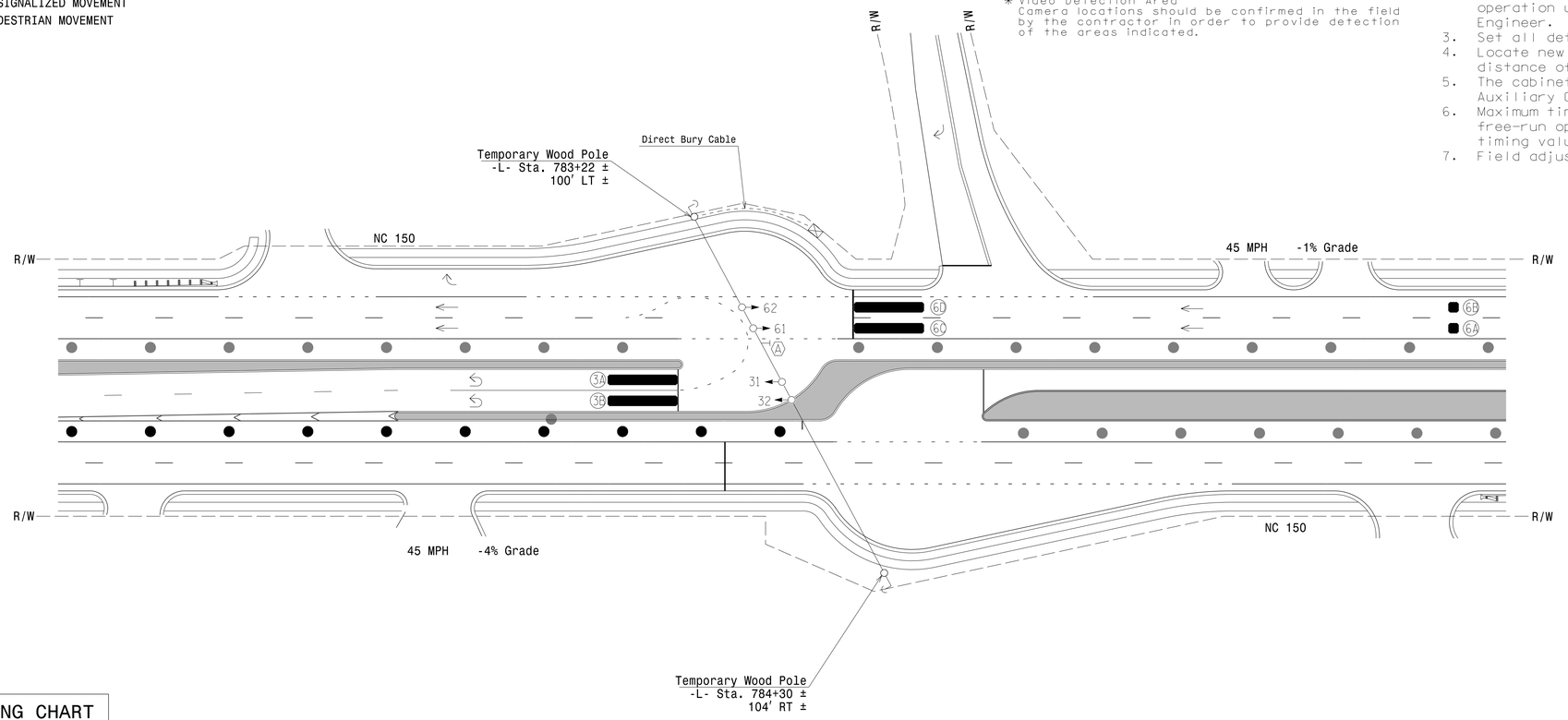

MAXTIME TIMING CHART

FEATURE	PHASE 3	PHASE 6
Walk *	–	–
Ped Clear *	–	–
Min Green	7	12
Passage *	2.0	6.0
Max 1 *	30	60
Yellow Change	3.0	4.6
Red Clear	4.5	1.6
Added Initial *	–	–
Maximum Initial *	–	–
Time Before Reduction *	–	15
Time To Reduce *	–	30
Minimum Gap	–	3.0
Advance Walk	–	–
Non Lock Detector	X	X
Vehicle Recall	–	MIN RECALL
Dual Entry	–	–

* These values may be field adjusted. Do not adjust Min Green and Extension times for phase 6 lower than what is shown. Min Green for all other phases should not be lower than 4 seconds.

LEGEND

PROPOSED		EXISTING
○→	Traffic Signal Head	●→
◐→	Modified Signal Head	N/A
⊣	Sign	⊣
□↓	Pedestrian Signal Head With Push Button & Sign	■↓
○ ○	Signal Pole with Guy	● ●
○ ○	Signal Pole with Sidewalk Guy	● ●
▭	Inductive Loop Detector	▭
⊠	Controller & Cabinet	⊠
□	Junction Box	■
----------	2-in Underground Conduit	----------
N/A	Right of Way	----------
→	Directional Arrow	→
▬	Video Detection Area	N/A
▭	Construction Zone	N/A
● ● ●	Drums	N/A
Ⓐ	No Left Turn Sign (R3-2)	Ⓐ

New Installation
Temporary Design 1 - TMP Phase III

DOCUMENT NOT CONSIDERED FINAL UNLESS ALL SIGNATURES COMPLETED

Stantec
Stantec Consulting Services Inc.
801 Jones Franklin Road-Suite 300
Raleigh, NC 27606
Tel. (919) 851-6866
Fax. (919) 851-7024
www.stantec.com
License No. F-0672

Prepared for the Offices of:
Transportation Mobility and Safety Division
NORTH CAROLINA DEPARTMENT OF TRANSPORTATION
Signal Design Section
750 N.Greenfield Pkwy,Garner,NC 27529

SCALE 0 40 1"=40'

NC 150 WB
at
SR 1116 (Talbert Road) U-Turn

Division 12 Iredell County Mooresville

PLAN DATE: May 2024 REVIEWED BY: J Galloway, PE
PREPARED BY: J Hambright REVIEWED BY: R Muncey, PE

REVISIONS	INIT.	DATE

SEAL
NORTH CAROLINA
PROFESSIONAL
SEAL 029904
ENGINEER
JASON P. GALLOWAY

DocuSigned by:
Jason Galloway 5/20/2024
10D1E2B40B4B46E...

DATE
SIG. INVENTORY NO. 12-18481

$$$$$$$STSDATE$$$$$
11:10:55 AM
I:\Traffic\Projects\Signals\Design\Signal Design\Temporary Design\Phase 3 TEMP\R-2307B_sig_dsn_12-18481.dgn
User:jgalloway

DocuSign Envelope ID: 01BFE048-0172-483D-84BB-AD2BA04925FD

PROJECT REFERENCE NO.	SHEET NO.
R-2307B	Sig. 86.1

18 CHANNEL IP CONFLICT MONITOR PROGRAMMING DETAIL

(set switches as shown)

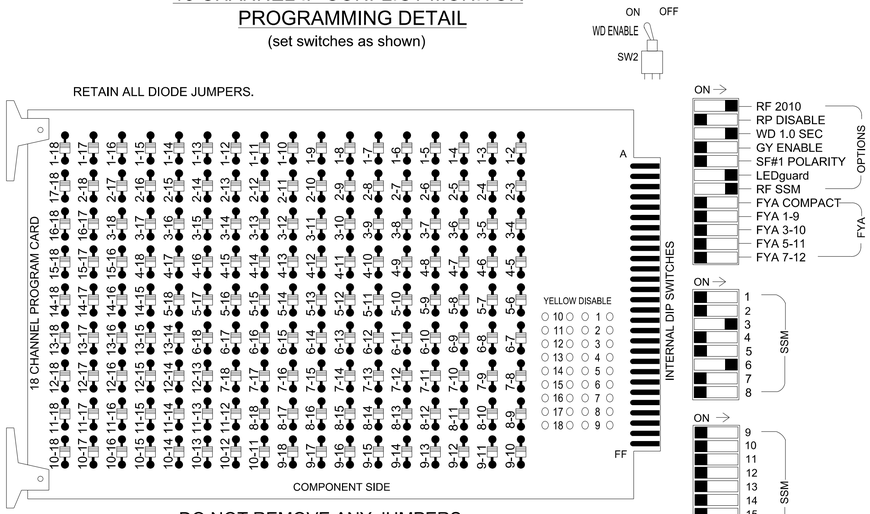

DO NOT REMOVE ANY JUMPERS

NOTES:

1. Card is provided with all diode jumpers in place. Removal of any jumper allows its channels to run concurrently.
2. Ensure jumpers SEL2-SEL5 and SEL9 are present on the monitor board.
3. Ensure that the Red Enable is active at all times during normal operation.
4. Integrate monitor with Ethernet network in cabinet.

INPUT FILE POSITION LAYOUT

(front view)

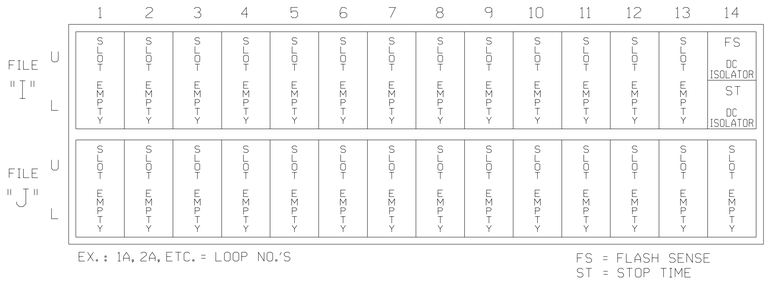

SPECIAL DETECTOR NOTE

Install a video detection system for vehicle detection. Perform installation according to manufacturer's directions and NCDOT engineer-approved mounting locations to accomplish the detection schemes shown on the Signal Design Plans.

NOTES

1. To prevent "flash-conflict" problems, insert red flash program blocks for all unused vehicle load switches in the output file. The installer shall verify that signal heads flash in accordance with the signal plan.
2. Program controller to start up in phase 2 Phase Not On and 6 Green No Walk.
3. If this signal will be managed by an ATMS software, enable controller and detector logging for all detectors used at this location.
4. The cabinet and controller are part of the NC 150 D12-02_Mooresville CLS.

EQUIPMENT INFORMATION

Controller.....2070LX
Cabinet.....332 w/ Aux
Software.....Q-Free MAXTIME
Cabinet Mount.....Base
Output File Positions.....18 With Aux. Output File
Load Switches Used.....S4, S8
Phases Used.....3, 6
Overlap "1".....NOT USED
Overlap "2".....NOT USED
Overlap "3".....NOT USED
Overlap "4".....NOT USED

SEQUENCE DETAIL

Front Panel
Main Menu >Controller >Sequence & Phs Config>Sequences

Web Interface
Home >Controller >Sequence

Sequence 1

Ring	Sequence Data
1	6,a,3,b
2	

SIGNAL HEAD HOOK-UP CHART

LOAD SWITCH NO.	S1	S2	S3	S4	S5	S6	S7	S8		S9	S10	S11	S12	AUX S1	AUX S2	AUX S3	AUX S4	AUX S5	AUX S6
CMU CHANNEL NO.	1	2	13	3	4	14	5	6		15	7	8	16	9	10	17	11	12	18
PHASE	1	2	2 PED	3	4	4 PED	5	6		6 PED	7	8	8 PED	OL1	OL2	SPARE	OL3	OL4	SPARE
SIGNAL HEAD NO.	NU	NU	NU	31,32	NU	NU	NU	61	62	NU	NU	NU	NU	NU	NU	NU	NU	NU	NU
RED								134	134										
YELLOW								135	135										
GREEN									136										
RED ARROW				116															
YELLOW ARROW				117															
GREEN ARROW				118				136											

NU = Not Used

THIS ELECTRICAL DETAIL IS FOR THE SIGNAL DESIGN: 12-1848T1
DESIGNED: MAY 2024
SEALED: 5/20/2024
REVISED: N/A

Temporary Design 1 - TMP Phase III
Electrical Detail

DOCUMENT NOT CONSIDERED FINAL UNLESS ALL SIGNATURES COMPLETED

Stantec
Stantec Consulting Services Inc.
801 Jones Franklin Road-Suite 300
Raleigh, NC 27606
Tel. (919) 851-6866
Fax. (919) 851-7024
www.stantec.com
License No. F-0672

ELECTRICAL AND PROGRAMMING DETAILS FOR:

Prepared for the Offices of:
Transportation Mobility and Safety Division
STATE OF NORTH CAROLINA DEPARTMENT OF TRANSPORTATION
ITS & Signals Management Section
750 N. Greenfield Pkwy, Garner, NC 27529

NC 150 WB
at
SR 1116 (Talbert Road) U-Turn

Division 12 Iredell County Mooresville

PLAN DATE: May 2024 REVIEWED BY: J Galloway, PE
PREPARED BY: D Waller, PE REVIEWED BY: R Muncey, PE

REVISIONS	INIT.	DATE

SEAL 029904 ENGINEER JASON P. GALLOWAY NORTH CAROLINA PROFESSIONAL

DocuSigned by: Jason Galloway 5/20/2024
10D1E2B40B4B46E... DATE
SIG. INVENTORY NO. 12-1848T1

11:19:03 AM
User:jgalloway
U:\Traffic\Projects\Design\Electrical Details\Temporary Design\MAXTIME\R-2307B_sm_ele_12-1848t1.dgn

DocuSign Envelope ID: 01BFE048-0172-483D-84BB-AD2BA04925FD

PROJECT REFERENCE NO.	SHEET NO.
R-2307B	Sig. 87.0

PHASING DIAGRAM

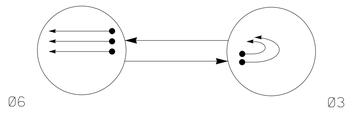

PHASING DIAGRAM DETECTION LEGEND

- DETECTED MOVEMENT
- UNDETECTED MOVEMENT (OVERLAP)
- UNSIGNALIZED MOVEMENT
- PEDESTRIAN MOVEMENT

TABLE OF OPERATION

SIGNAL FACE	PHASE Ø6	PHASE Ø3	PHASE FLASH
31,32	(R)	↑	(R)
61	↑	R	R
62,63	G	R	R

SIGNAL FACE I.D.

All Heads L.E.D.

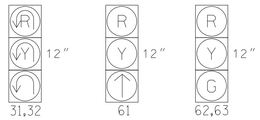

MAXTIME DETECTOR INSTALLATION CHART

DETECTOR					PROGRAMMING						
LOOP	SIZE (FT)	DISTANCE FROM STOPBAR (FT)	TURNS	NEW LOOP	CALL PHASE	DELAY TIME	EXTEND TIME	EXTEND	ADDED INITIAL	CALL	DELAY DURING GREEN	NEW CARD
3A	6X40	0	2-4-2	X	3	-	-	X	-	X	-	X
3B	6X40	0	2-4-2	X	3	-	-	X	-	X	-	X
6A	6X6	300	4	X	6	-	-	X	X	X	-	X
6B	6X6	300	4	X	6	-	-	X	X	X	-	X
6C	6X6	300	4	X	6	-	-	X	X	X	-	X

2 Phase
Fully Actauted
NC 150 D12-02_MOORESVILLE
CLS

NOTES

1. Refer to "Roadway Standard Drawings NCDOT" dated January 2024 and "Standard Specifications for Roads and Structures" dated January 2024.
2. Do not program signal for late night flashing operation unless otherwise directed by the Engineer.
3. Set all detector units to presence mode.
4. Maximum times shown in timing chart are for free-run operation only. Coordinated signal system timing values supersede these values.

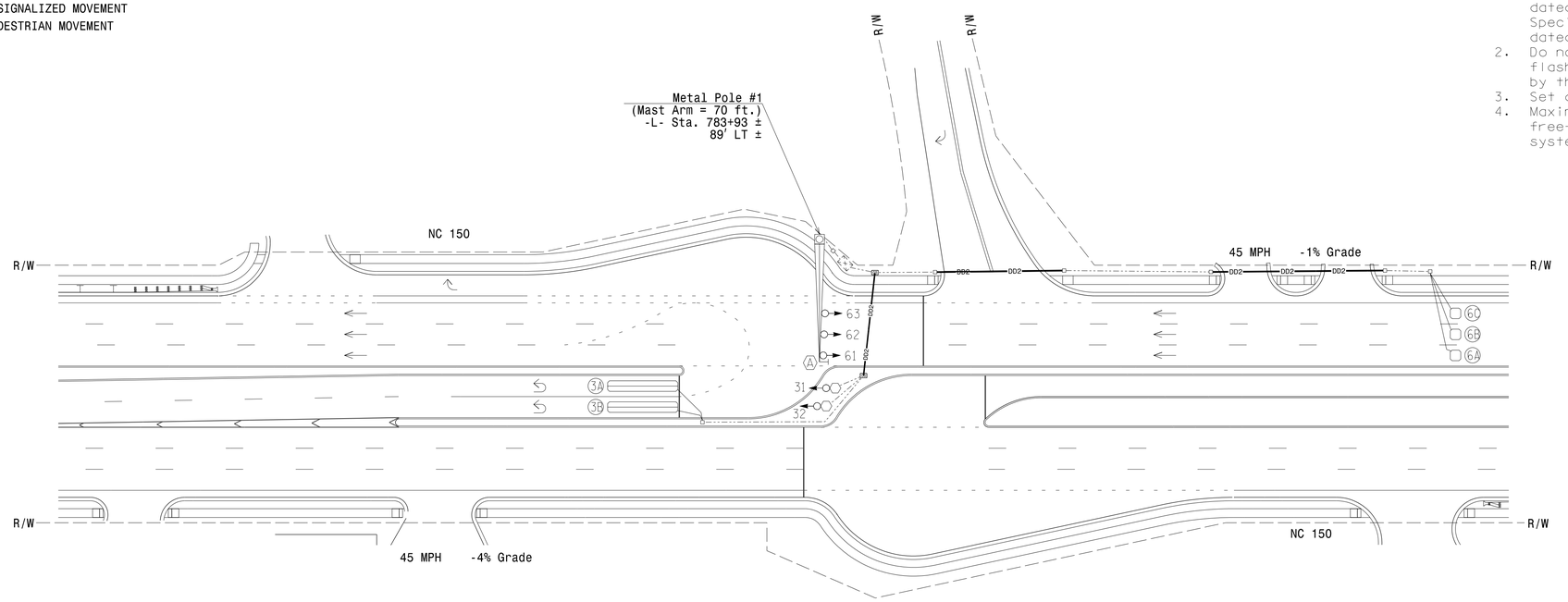

LEGEND

PROPOSED		EXISTING
○→	Traffic Signal Head	●→
◐→	Modified Signal Head	N/A
⊣	Sign	⊣
□↓	Pedestrian Signal Head With Push Button & Sign	■↓
○	Signal Pole with Guy	●
○	Signal Pole with Sidewalk Guy	●
▭	Inductive Loop Detector	▭
⊠	Controller & Cabinet	⊠
□	Junction Box	■
----	2-in Underground Conduit	----
N/A	Right of Way	----
→	Directional Arrow	→
◁	Metal Pole with Mastarm	◁
—DD#—	Directional Drill (#) x 2" Conduit	N/A
⬡	Type II Signal Pedestal	⬢
OS	Oversized Junction Box	■
(A)	No Left Turn Sign (R3-2)	(A)

MAXTIME TIMING CHART

FEATURE	PHASE 3	PHASE 6
Walk *	–	–
Ped Clear *	–	–
Min Green	7	12
Passage *	2.0	6.0
Max 1 *	30	60
Yellow Change	3.0	4.6
Red Clear	5.4	2.2
Added Initial *	–	1.0
Maximum Initial *	–	34
Time Before Reduction *	–	15
Time To Reduce *	–	30
Minimum Gap	–	3.0
Advance Walk	–	–
Non Lock Detector	X	–
Vehicle Recall	–	MIN RECALL
Dual Entry	–	–

* These values may be field adjusted. Do not adjust Min Green and Extension times for phase 6 lower than what is shown. Min Green for all other phases should not be lower than 4 seconds.

New Installation - Final Design

DOCUMENT NOT CONSIDERED FINAL UNLESS ALL SIGNATURES COMPLETED

Stantec
Stantec Consulting Services Inc.
801 Jones Franklin Road-Suite 300
Raleigh, NC 27606
Tel. (919) 851-6866
Fax. (919) 851-7024
www.stantec.com
License No. F-0672

Prepared for the Offices of:
Transportation Mobility and Safety Division
State of North Carolina Department of Transportation
Signal Design Section
750 N.Greenfield Pkwy.Garner,NC 27529

NC 150 WB
at
SR 1116 (Talbert Road) U-Turn

Division 12 Iredell County Mooresville

PLAN DATE: May 2024 REVIEWED BY: J Galloway, PE
PREPARED BY: J Hambright REVIEWED BY: R Muncey, PE

SCALE 0 40 1"=40'

REVISIONS	INIT.	DATE

SEAL
NORTH CAROLINA
PROFESSIONAL
SEAL
029904
ENGINEER
JASON P. GALLOWAY

DocuSigned by:
Jason Galloway 5/20/2024
10D1E2B40B4B46E...
SIG. INVENTORY NO. 12-1848

$$$$$$SYSDATE$$$$$
11:19:58 AM
U:\Traffic\Projects\Design\Signal Design\Final Design\R-2307B_sig_dsn_12-1848.dgn
User:jgalloway

DocuSign Envelope ID: 01BFE048-0172-483D-84BB-AD2BA04925FD

PROJECT REFERENCE NO.	SHEET NO.
R-2307B	Sig. 87.1

18 CHANNEL IP CONFLICT MONITOR PROGRAMMING DETAIL

(set switches as shown)

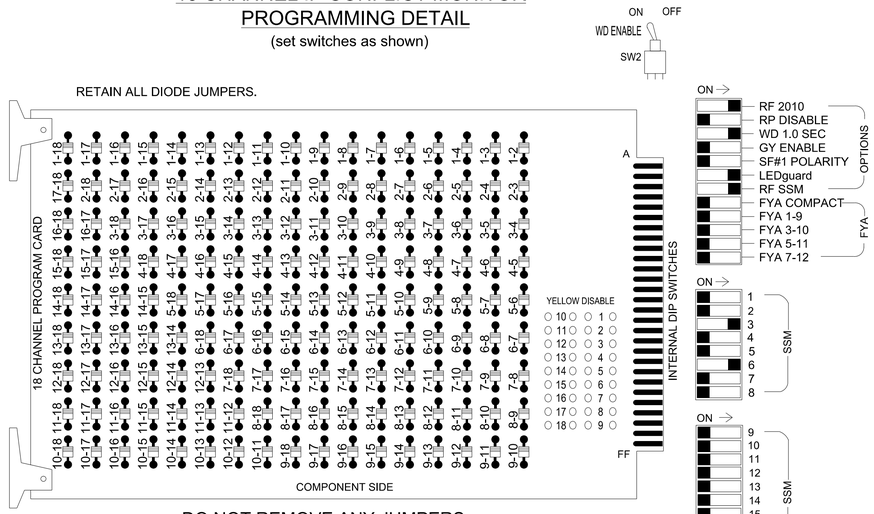

DO NOT REMOVE ANY JUMPERS

NOTES:

1. Card is provided with all diode jumpers in place. Removal of any jumper allows its channels to run concurrently.
2. Ensure jumpers SEL2-SEL5 and SEL9 are present on the monitor board.
3. Ensure that the Red Enable is active at all times during normal operation.
4. Integrate monitor with Ethernet network in cabinet.

NOTES

1. To prevent "flash-conflict" problems, insert red flash program blocks for all unused vehicle load switches in the output file. The installer shall verify that signal heads flash in accordance with the signal plan.
2. Program controller to start up in phase 2 Phase Not On and 6 Green No Walk.
3. If this signal will be managed by an ATMS software, enable controller and detector logging for all detectors used at this location.
4. The cabinet and controller are part of the NC 150 D12-02_Mooresville CLS.

EQUIPMENT INFORMATION

Controller.....2070LX
Cabinet.....332 w/ Aux
Software.....Q-Free MAXTIME
Cabinet Mount.....Base
Output File Positions.....18 With Aux. Output File
Load Switches Used.....S4, S8
Phases Used.....3, 6
Overlap "1".....NOT USED
Overlap "2".....NOT USED
Overlap "3".....NOT USED
Overlap "4".....NOT USED

SIGNAL HEAD HOOK-UP CHART

LOAD SWITCH NO.	S1	S2	S3	S4	S5	S6	S7	S8		S9	S10	S11	S12	AUX S1	AUX S2	AUX S3	AUX S4	AUX S5	AUX S6
CMU CHANNEL NO.	1	2	13	3	4	14	5	6		15	7	8	16	9	10	17	11	12	18
PHASE	1	2	2 PED	3	4	4 PED	5	6		6 PED	7	8	8 PED	OL1	OL2	SPARE	OL3	OL4	SPARE
SIGNAL HEAD NO.	NU	NU	NU	31,32	NU	NU	NU	61	62,63	NU	NU	NU	NU	NU	NU	NU	NU	NU	NU
RED								134	134										
YELLOW								135	135										
GREEN									136										
RED ARROW				116															
YELLOW ARROW				117															
GREEN ARROW				118				136											
✋																			
🚶																			

NU = Not Used

INPUT FILE POSITION LAYOUT

(front view)

		1	2	3	4	5	6	7	8	9	10	11	12	13	14
FILE "I"	U	SLOT EMPTY	SLOT EMPTY	SLOT EMPTY	SLOT EMPTY	∅ 3 3A	∅ 3 3B	SLOT EMPTY	SLOT EMPTY	SLOT EMPTY	SLOT EMPTY	SLOT EMPTY	SLOT EMPTY	∅ 6 PED DC ISOLATOR	FS DC ISOLATOR
	L					NOT USED	NOT USED							∅ 3 PED DC ISOLATOR	ST DC ISOLATOR
FILE "J"	U	SLOT EMPTY	∅ 6 6A	∅ 6 6C	SLOT EMPTY	SLOT EMPTY	SLOT EMPTY	SLOT EMPTY	SLOT EMPTY	SLOT EMPTY	SLOT EMPTY	SLOT EMPTY	SLOT EMPTY	SLOT EMPTY	SLOT EMPTY
	L		∅ 6 6B	NOT USED											

EX.: 1A, 2A, ETC. = LOOP NO.'S

FS = FLASH SENSE
ST = STOP TIME

INPUT FILE CONNECTION & PROGRAMMING CHART

LOOP NO.	LOOP TERMINAL	INPUT FILE POS.	PIN NO.	INPUT POINT	DETECTOR NO.	CALL PHASE	DELAY TIME	EXTEND TIME	EXTEND	ADDED INITIAL	CALL	DELAY DURING GREEN
3A	TB4-5,6	I5U	58	20	7	3			X		X	
3B	TB4-9,10	I6U	41	3	8	3			X		X	
6A	TB3-5,6	J2U	40	2	16	6			X	X	X	
6B	TB3-7,8	J2L	44	6	17	6			X	X	X	
6C	TB3-9,10	J3U	64	30	18	6			X	X	X	

INPUT FILE POSITION LEGEND: J2L

- FILE J
- SLOT 2
- LOWER

SEQUENCE DETAIL

Front Panel
Main Menu >Controller >Sequence & Phs Config>Sequences

Web Interface
Home >Controller >Sequence

Sequence 1

Ring	Sequence Data
1	6,a,3,b
2	

THIS ELECTRICAL DETAIL IS FOR THE SIGNAL DESIGN: 12-1848
DESIGNED: MAY 2024
SEALED: 5/20/2024
REVISED: N/A

Electrical Detail - Final Design

DOCUMENT NOT CONSIDERED FINAL UNLESS ALL SIGNATURES COMPLETED

Stantec
Stantec Consulting Services Inc.
801 Jones Franklin Road-Suite 300
Raleigh, NC 27606
Tel. (919) 851-6866
Fax. (919) 851-7024
www.stantec.com
License No. F-0672

ELECTRICAL AND PROGRAMMING DETAILS FOR:

Prepared for the Offices of:
Transportation Mobility and Safety Division
STATE OF NORTH CAROLINA
DEPARTMENT OF TRANSPORTATION
ITS & Signals Management Section
750 N. Greenfield Pkwy, Garner, NC 27529

NC 150 WB
at
SR 1116 (Talbert Road) U-Turn

Division 12 Iredell County Mooresville

PLAN DATE: May 2024 REVIEWED BY: J Galloway, PE
PREPARED BY: D Waller, PE REVIEWED BY: R Muncey, PE

REVISIONS	INIT.	DATE

SEAL NORTH CAROLINA PROFESSIONAL SEAL 029904 ENGINEER JASON P. CALLOWAY

DocuSigned by: Jason Galloway 5/20/2024
10D1E2B40B4B46E... DATE
SIG. INVENTORY NO. 12-1848

11:20:50 AM
U:\Traffic\Projects\Design\Electrical Details\Final Design\MAXTIME\R-2307B_sm_ele_12-1848.dgn
User:jgalloway

DocuSign Envelope ID: 01BFE048-0172-483D-84BB-AD2BA04925FD

Design Loading for METAL POLE NO. 1

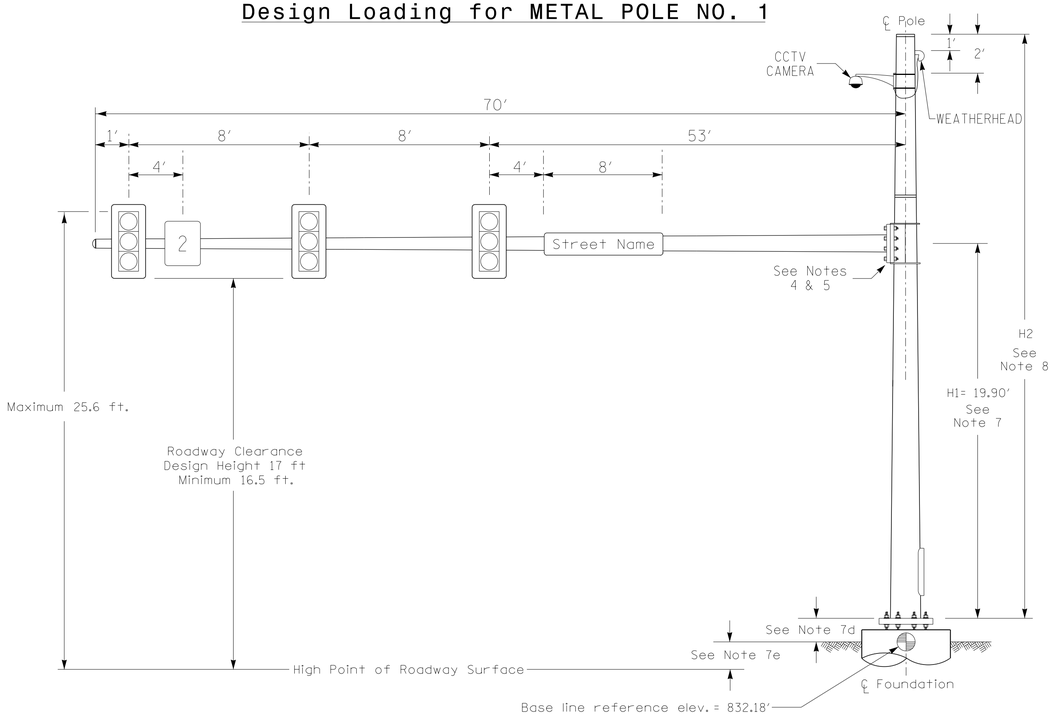

Elevation View

SPECIAL NOTE

The contractor is responsible for verifying that the mast arm attachment height (H1) will provide the "Design Height" clearance from the roadway before submitting final shop drawings for approval. Verify elevation data below which was obtained by field measurement or from available project survey data.

Elevation Data for Mast Arm Attachment (H1)

Elevation Differences for:	Pole 1	
Baseline reference point at ⊕ Foundation @ ground level	832.18 ft.	
Elevation difference at High point of roadway surface	+0.87 ft.	
Elevation difference at Edge of travelway or face of curb	+/-0.0 ft.	

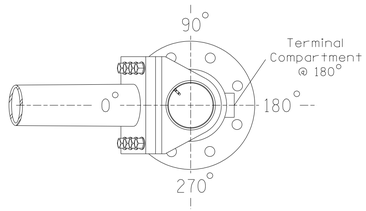

POLE RADIAL ORIENTATION

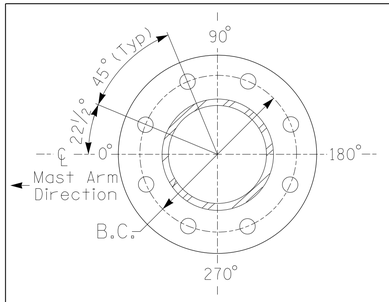

8 BOLT BASE PLATE DETAIL

See Note 6

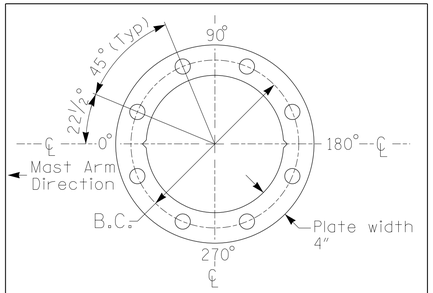

BASE PLATE TEMPLATE & ANCHOR BOLT LOCK PLATE DETAIL
For 8 Bolt Base Plate

METAL POLE No. 1

PROJECT REFERENCE NO.	SHEET NO.
R-2307B	Sig. 87.2

MAST ARM LOADING SCHEDULE

LOADING SYMBOL	DESCRIPTION	AREA	SIZE	WEIGHT
	RIGID MOUNTED SIGNAL HEAD 12″-3 SECTION-WITH BACKPLATE	9.3 S.F.	25.5″W X 52.5″L	60 LBS
2	SIGN RIGID MOUNTED	7.5 S.F.	30.0″W X 36.0″L	14 LBS
Street Name	STREET NAME SIGN RIGID MOUNTED	16.0 S.F.	24.0″W X 96.0″L	36 LBS
	CCTV CAMERA ARM-MOUNTED	1.0 S.F.	11.0″W X 11.0″L	30 LBS

NOTES

DESIGN REFERENCE MATERIAL

1. Design the traffic signal structure and foundation in accordance with:
   - The 1st Edition 2015 AASHTO LRFD "Standard Specifications for Structural Supports for Highway Signs, Luminaires, and Traffic Signals, including all of the latest interim revisions.
   - The 2024 NCDOT "Standard Specifications for Roads and Structures." The latest addenda to the specifications can be found in the traffic signal project special provisions.
   - The 2024 NCDOT Roadway Standard Drawings.
   - The traffic signal project plans and special provisions.
   - The NCDOT "Metal Pole Standards" located at the following NCDOT website: https://connect.ncdot.gov/resources/safety/Pages/ITS-Design-Resources.aspx

DESIGN REQUIREMENTS

2. Design the traffic signal structure using the loading conditions shown in the elevation views. These are anticipated worst case "design loads" and may not represent the actual loads that will be applied at the time of the installation. The contractor should refer to the traffic signal plans for the actual loads that will be applied at the time of the installation.
3. Design all signal supports using force ratios that do not exceed 0.9.
4. The camber design for the mast arm deflection should provide an appearance of a low pitched arch where the tip or the free end of the mast arm does not deflect below horizontal when fully loaded.
5. A clamp-type bolted mast arm-to-pole connection may be used instead of the welded ring stiffened box connection shown as long as the connection meets all of the design requirements.
6. Design base plate with 8 anchor bolt holes. Provide 2 inch x 60 inch anchor bolts.
7. The mast arm attachment height (H1) shown is based on the following design assumptions:
   a. Mast arm slope and deflection are not considered in determining the arm attachment height as they are assumed to offset each other.
   b. Signal heads are rigidly mounted and vertically centered on the mast arm.
   c. The roadway clearance height for design is as shown in the elevation views.
   d. The top of the pole base plate is 0.75 feet above the ground elevation.
   e. Refer to the Elevation Data Chart for the elevation differences between the proposed foundation ground level and the high point of the roadway.
8. The pole manufacturer will determine the total height (H2) of each pole using the following: Mast arm attachment height (H1) plus 10 feet.
9. If pole location adjustments are required, the contractor must gain approval from the engineer as this may affect the mast arm lengths and arm attachment heights. The contractor may contact the Signal Design Section Senior Structural Engineer for assistance at (919) 814-5000.
10. The contractor is responsible for verifying that the mast arm length shown will allow proper positioning of the signal heads over the roadway.
11. The contractor is responsible for providing soil penetration testing data (SPT) to the pole manufacturer so site specific foundations can be designed.
12. Install the CCTV camera 10 feet below top of pole.
13. Install the weatherhead 1 foot below top of pole.

NCDOT Wind Zone 5 (110 mph)

Stantec

DOCUMENT NOT CONSIDERED FINAL UNLESS ALL SIGNATURES COMPLETED

Prepared for the Offices of:
Transportation Mobility and Safety Division
NORTH CAROLINA DEPARTMENT OF TRANSPORTATION
Signal Design Section

750 N.Greenfield Pkwy.Garner,NC 27529

NC 150 WB
at
SR 1116 (Talbert Road) U-Turn

Division 12 Iredell County Mooresville

PLAN DATE: November 2023 REVIEWED BY: J. Galloway, PE
PREPARED BY: J. Hambright REVIEWED BY: R. Muncey, PE

SCALE 0 N/A N/A

REVISIONS	INIT.	DATE

NORTH CAROLINA PROFESSIONAL SEAL 029904 ENGINEER JASON P. GALLOWAY

DocuSigned by: Jason Galloway 5/20/2024
10D1E2B40B4B46E... DATE

SIG. INVENTORY NO. 12-1848

5/17/2024
11:21:43 AM
User:jgalloway
U:\Projects\Signals\Design\Metal Poles\Loading Diagrams\Loading Diagram_Single Mast Arm_12-1848.dgn

DocuSign Envelope ID: 01BFE048-0172-483D-84BB-AD2BA04925FD

PROJECT REFERENCE NO.	SHEET NO.
R-2307B	Sig. 88.0

DEFAULT PHASING DIAGRAM

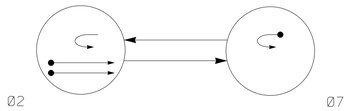

ALTERNATE PHASING DIAGRAM

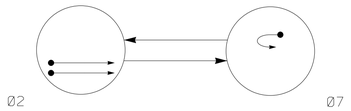

PHASING DIAGRAM DETECTION LEGEND

- DETECTED MOVEMENT
- UNDETECTED MOVEMENT (OVERLAP)
- UNSIGNALIZED MOVEMENT
- PEDESTRIAN MOVEMENT

DEFAULT PHASING TABLE OF OPERATION			
SIGNAL FACE	PHASE Ø2	PHASE Ø7	FLASH
21	↑	R	R
22	G	R	R
71,72	FY	↑	R

ALTERNATE PHASING TABLE OF OPERATION			
SIGNAL FACE	PHASE Ø2	PHASE Ø7	FLASH
21	↑	R	R
22	G	R	R
71,72	R	↑	R

SIGNAL FACE I.D.

All Heads L.E.D.

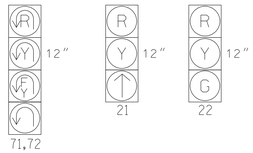

MAXTIME DETECTOR INSTALLATION CHART

DETECTOR					PROGRAMMING							
LOOP	SIZE (FT)	DISTANCE FROM STOPBAR (FT)	TURNS	NEW LOOP	CALL PHASE	DELAY TIME	EXTEND TIME	EXTEND ADDED INITIAL	CALL	DELAY DURING GREEN	NEW CARD	
2A	6X6	300	✳	✳	2	-	-	X	-	X	-	✳
2B	6X6	300	✳	✳	2	-	-	X	-	X	-	✳
2C	6X40	0	✳	✳	2	5.0	2.0	X	-	X	X	✳
2D	6X40	0	✳	✳	2	5.0	2.0	X	-	X	X	✳
7A	6X40	0	✳	✳	7	15.0★	-	X	-	X	-	✳

✳ Video Detection Area
Camera locations should be confirmed in the field by the contractor in order to provide detection of the areas indicated.

★ Disable delay during Alternate Phasing Operation.

2 Phase
Fully Actuated w/
Alternate Phasing
NC 150 D12-02_MOORESVILLE
CLS

NOTES

1. Refer to "Roadway Standard Drawings NCDOT" dated January 2024 and "Standard Specifications for Roads and Structures" dated January 2024.
2. Do not program signal for late night flashing operation unless otherwise directed by the Engineer.
3. Set all detector units to presence mode.
4. Locate new cabinet so as not to obstruct sight distance of vehicles turning right on red.
5. The Division Traffic Engineer will determine the hours of use for each phasing plan.
6. Maximum times shown in timing chart are for free-run operation only. Coordinated signal system timing values supersede these values.

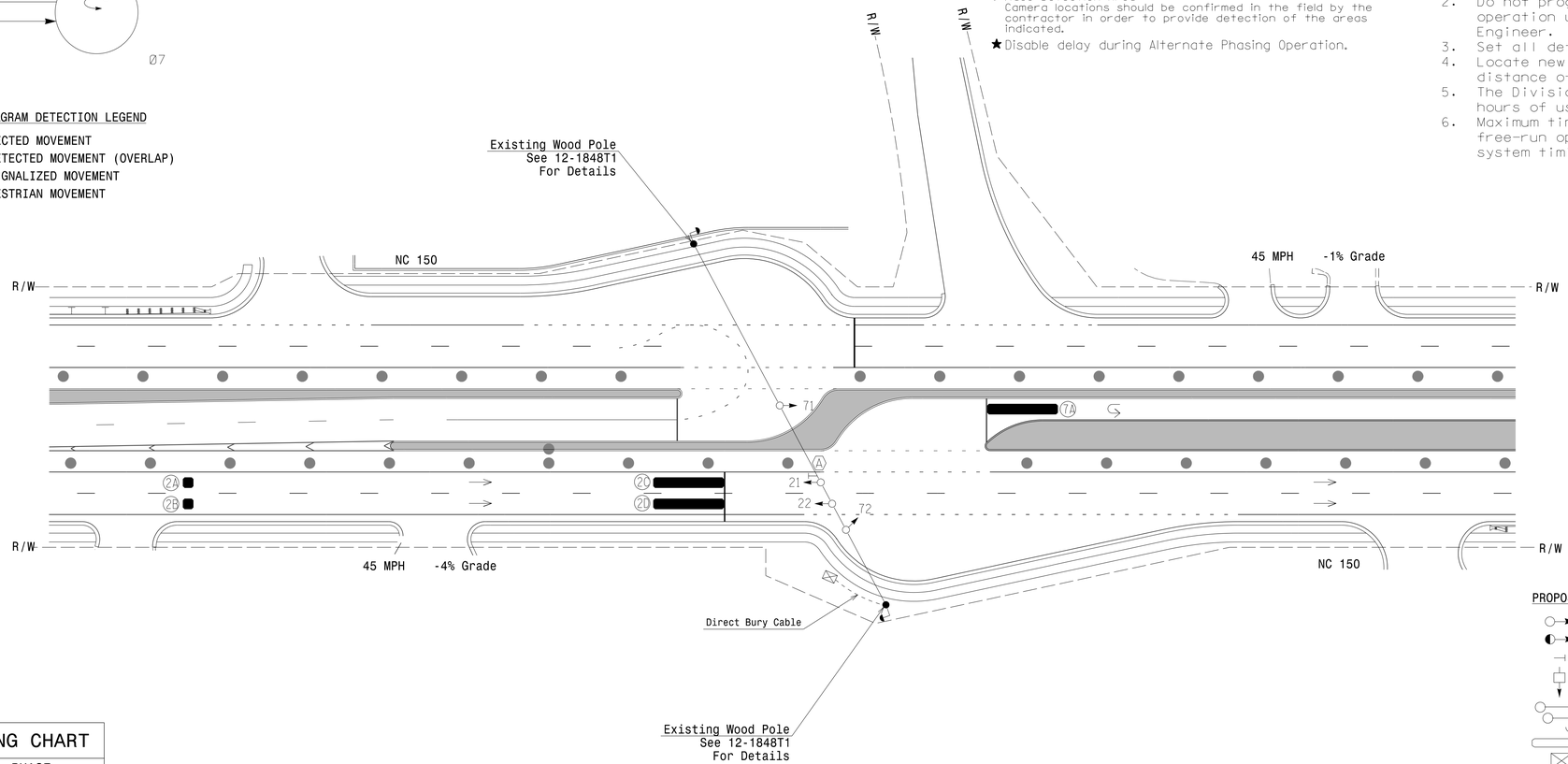

MAXTIME TIMING CHART

FEATURE	PHASE 2	PHASE 7
Walk *	–	–
Ped Clear *	–	–
Min Green	12	7
Passage *	6.0	2.0
Max 1 *	60	30
Yellow Change	4.9	3.0
Red Clear	2.3	3.9
Added Initial *	–	–
Maximum Initial *	–	–
Time Before Reduction *	15	–
Time To Reduce *	30	–
Minimum Gap	3.0	–
Advance Walk	–	–
Non Lock Detector	X	X
Vehicle Recall	MIN RECALL	–
Dual Entry	–	–

* These values may be field adjusted. Do not adjust Min Green and Extension times for phase 2 lower than what is shown. Min Green for all other phases should not be lower than 4 seconds.

LEGEND

PROPOSED		EXISTING
○→	Traffic Signal Head	●→
◐→	Modified Signal Head	N/A
⊣	Sign	⊣
□↓	Pedestrian Signal Head With Push Button & Sign	■↓
○	Signal Pole with Guy	●
○	Signal Pole with Sidewalk Guy	●
▭	Inductive Loop Detector	▭
⊠	Controller & Cabinet	⊠
□	Junction Box	■
----------	2-in Underground Conduit	----------
N/A	Right of Way	————
→	Directional Arrow	→
▬	Video Detection Area	N/A
▬	Construction Zone	N/A
●●●	Drums	N/A
Ⓐ	No Left Turn Sign (R3-2)	Ⓐ

New Installation
Temporary Design 1 - TMP Phase III

DOCUMENT NOT CONSIDERED FINAL UNLESS ALL SIGNATURES COMPLETED

Stantec
Stantec Consulting Services Inc.
801 Jones Franklin Road-Suite 300
Raleigh, NC 27606
Tel. (919) 851-6866
Fax. (919) 851-7024
www.stantec.com
License No. F-0672

Prepared for the Offices of:
Transportation Mobility and Safety Division
Signal Design Section
NORTH CAROLINA DEPARTMENT OF TRANSPORTATION
750 N.Greenfield Pkwy,Garner,NC 27529

SCALE 0 40 1"=40'

NC 150 EB
at
MacLeod Drive U-Turn

Division 12 Iredell County Mooresville

PLAN DATE:	May 2024	REVIEWED BY:	J Galloway, PE
PREPARED BY:	J Hambright	REVIEWED BY:	R Muncey, PE

REVISIONS	INIT.	DATE

SEAL
NORTH CAROLINA
PROFESSIONAL
SEAL
029904
ENGINEER
JASON P. GALLOWAY

DocuSigned by:
Jason Galloway 5/20/2024
10D1E2B40B4B46E...
SIG. INVENTORY NO. 12-1847TI

$$$$$$$SYSDATE$$$$$$
11:23:05 AM
User:jgalloway
I:\Traffic\Signals\Design\Signal Design\Temporary Design\Phase 3 TEMP\R-2307B_sig_dsn_12-1847T1.dgn

DocuSign Envelope ID: 01BFE048-0172-483D-84BB-AD2BA04925FD

PROJECT REFERENCE NO.	SHEET NO.
R-2307B	Sig. 88.1

18 CHANNEL IP CONFLICT MONITOR PROGRAMMING DETAIL

(remove jumpers and set switches as shown)

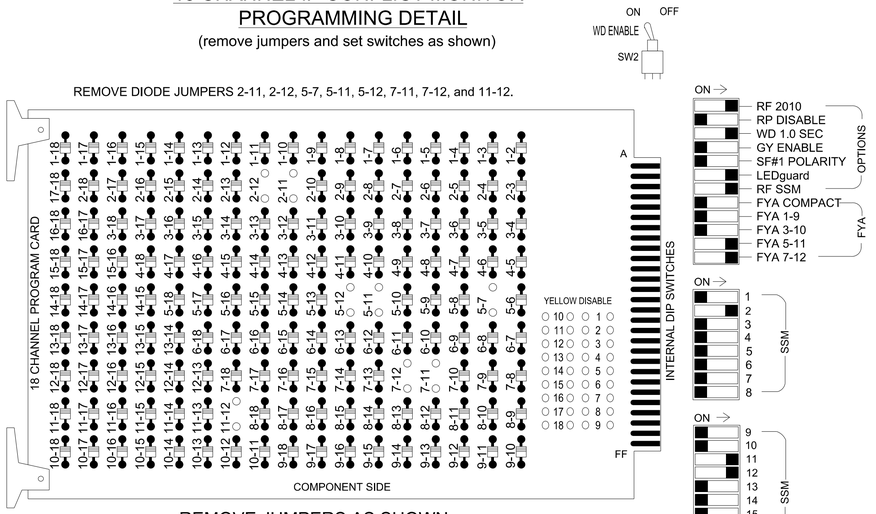

REMOVE JUMPERS AS SHOWN

NOTES:

1. Card is provided with all diode jumpers in place. Removal of any jumper allows its channels to run concurrently.
2. Ensure jumpers SEL2-SEL5 and SEL9 are present on the monitor board.
3. Ensure that the Red Enable is active at all times during normal operation.
4. Integrate monitor with Ethernet network in cabinet.

■ = DENOTES POSITION OF SWITCH

NOTES

1. To prevent "flash-conflict" problems, insert red flash program blocks for all unused vehicle load switches in the output file. The installer shall verify that signal heads flash in accordance with the signal plan.
2. Program controller to start up in phase 2 Green No Walk and 6 Phase Not On.
3. If this signal will be managed by an ATMS software, enable controller and detector logging for all detectors used at this location.
4. The cabinet and controller are part of the NC 150 D12-02_Mooresville CLS.

EQUIPMENT INFORMATION

Controller.....2070LX
Cabinet.....332 w/ Aux
Software.....Q-Free MAXTIME
Cabinet Mount.....Base
Output File Positions.....18 With Aux. Output File
Load Switches Used.....S2, S7, S10, AUX S4, AUX S5
Phases Used.....2, 7
Overlap "1".....NOT USED
Overlap "2".....NOT USED
Overlap "3".....*
Overlap "4".....*

*See overlap programming detail on sheet 2

SIGNAL HEAD HOOK-UP CHART

LOAD SWITCH NO.	S1	S2		S3	S4	S5	S6	S7	S8	S9	S10	S11	S12	AUX S1	AUX S2	AUX S3	AUX S4	AUX S5	AUX S6
CMU CHANNEL NO.	1	2		13	3	4	14	5	6	15	7	8	16	9	10	17	11	12	18
PHASE	1	2		2 PED	3	4	4 PED	7	6	6 PED	7	8	8 PED	OL1	OL2	SPARE	OL3	OL4	SPARE
SIGNAL HEAD NO.	NU	21	22	NU	NU	NU	NU	72 ★	NU	NU	71 ★	NU	NU	NU	NU	NU	72 ★	71 ★	NU
RED		128	128																
YELLOW		129	129					✳			✳								
GREEN			130																
RED ARROW																	A114	A101	
YELLOW ARROW																	A115	A102	
FLASHING YELLOW ARROW																	A116	A103	
GREEN ARROW		130						133			124								

NU = Not Used

✳ Denotes install load resistor. See load resistor installation detail this sheet.

★ See pictorial of head wiring in detail this sheet.

INPUT FILE POSITION LAYOUT

(front view)

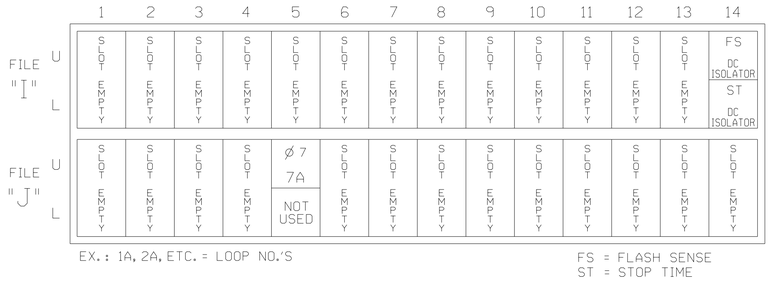

EX.: 1A, 2A, ETC. = LOOP NO.'S

FS = FLASH SENSE
ST = STOP TIME

INPUT FILE CONNECTION & PROGRAMMING CHART

LOOP NO.	LOOP TERMINAL	INPUT FILE POS.	PIN NO.	INPUT POINT	DETECTOR NO.	CALL PHASE	DELAY TIME	EXTEND TIME	EXTEND	ADDED INITIAL	CALL	DELAY DURING GREEN
7A	TB5-5,6	J5U	57	19	21	7	15.0		X		X	

* For the detectors to work as shown on the signal design plan, see the Detector Programming Detail for Alternate Phasing on sheet 2 of 2.

INPUT FILE POSITION LEGEND: J2L
FILE J
SLOT 2
LOWER

DETECTOR NOTES

1. For all loops install a video detection system for vehicle detection. Perform installation according to manufacturer's directions and NCDOT engineer-approved mounting locations to accomplish the detection schemes shown on the Signal Design Plans.
2. For loop 7A detector card placements and slots reserved for wired inputs are typical for a NCDOT installation. Inputs associated with these slots are compatible with time of day instructions located on sheet 2 of this electrical detail.

FYA SIGNAL WIRING DETAIL

(wire signal head as shown)

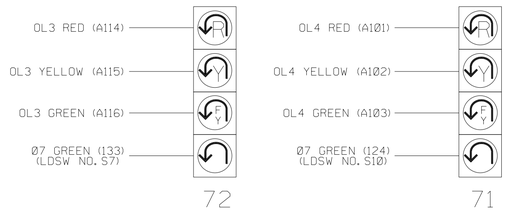

LOAD RESISTOR INSTALLATION DETAIL

(install resistor as shown below)

ACCEPTABLE VALUES	
VALUE (ohms)	WATTAGE
1.5K - 1.9K	25W (min)
2.0K - 3.0K	10W (min)

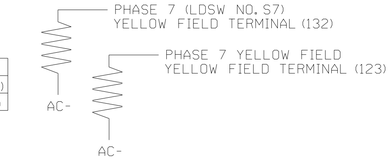

SEQUENCE DETAIL

Front Panel
Main Menu >Controller >Sequence & Phs Config>Sequences

Web Interface
Home >Controller >Sequence

Sequence 1

Ring	Sequence Data
1	2,a,7,b
2	

THIS ELECTRICAL DETAIL IS FOR THE SIGNAL DESIGN: 12-1847T1
DESIGNED: MAY 2024
SEALED: 5/20/2024
REVISED: N/A

Temporary Design 1 - TMP Phase III
Electrical Detail - Sheet 1 of 2

DOCUMENT NOT CONSIDERED FINAL UNLESS ALL SIGNATURES COMPLETED

Stantec
Stantec Consulting Services Inc.
801 Jones Franklin Road-Suite 300
Raleigh, NC 27606
Tel. (919) 851-6866
Fax. (919) 851-7024
www.stantec.com
License No. F-0672

ELECTRICAL AND PROGRAMMING DETAILS FOR:

Prepared for the Offices of:
Transportation Mobility and Safety Division
STATE OF NORTH CAROLINA DEPARTMENT OF TRANSPORTATION
ITS & Signals Management Section
750 N. Greenfield Pkwy, Garner, NC 27529

NC 150 EB
at
MacLeod Drive U-Turn

Division 12 Iredell County Mooresville

PLAN DATE:	May 2024	REVIEWED BY:	J Galloway, PE
PREPARED BY:	RMM/JPG	REVIEWED BY:	R Muncey, PE

REVISIONS	INIT.	DATE

SEAL 029904 NORTH CAROLINA PROFESSIONAL ENGINEER JASON P. GALLOWAY

DocuSigned by: Jason Gallaway 5/20/2024
10D1E2B40B4B46E... DATE
SIG. INVENTORY NO. 12-1847T1

11:24:03 AM
User:jgalloway
Z:\Signals\Designs\Electrical Details\Temporary Designs\MAXTIME\R-2307B_sm_ele_12-1847t1.dgn

DocuSign Envelope ID: 01BFE048-0172-483D-84BB-AD2BA04925FD

PROJECT REFERENCE NO.	SHEET NO.
R-2307B	Sig. 88.2

MAXTIME ALTERNATE PHASING ACTIVATION DETAIL

To run alternate phasing, select a Pattern that is programmed to run Overlap Plan 2 and Detector Plan 2.
A Pattern can be selected through the scheduler or manually by changing the Operational Mode.

PHASING	OVERLAP PLAN	VEH DET PLAN
ACTIVE PLAN REQUIRED TO RUN DEFAULT PHASING	1	1
ACTIVE PLAN REQUIRED TO RUN ALTERNATE PHASING	2	2

ALTERNATE PHASING CHANGE SUMMARY

THE FOLLOWING IS A SUMMARY OF WHAT TAKES PLACE WHEN OVERLAP PLAN 2 AND VEHICLE DETECTOR PLAN 2 ACTIVATE TO CALL THE "ALTERNATE PHASING":

OVERLAP PLAN 2: Modifies overlap included phases for head 71 to run protected turns only.

VEH DET PLAN 2: Reduces delay time for phase 7 call on loop 7A to 0 seconds.

MAXTIME ALTERNATE PHASING PATTERN PROGRAMMING DETAIL

Front Panel
Main Menu >Controller >Coordination >Patterns

Web Interface
Home >Controller >Coordination >Patterns

Pattern Parameters

Pattern	Veh Det Plan	Overlap Plan
*	2	2

* The Pattern number(s) are to be determined by the Division and/or City Traffic Engineer.

MAXTIME DETECTOR PROGRAMMING DETAIL FOR ALTERNATE PHASING LOOP 7A

Front Panel
Main Menu >Controller >Detector >Veh Det Plans

Web Interface
Home >Controller >Detector Configuration >Vehicle Detectors

In the table view of web interface right click on "Detector" in the top left corner of the table. Copy the entire contents of Detector Plan 1. Paste Detector Plan 1 into Detector Plan 2. Modify Detector Plan 2 as shown below and save changes.

Plan 2

	Detector	Call Phase	Delay
7A	7	7	0.0

OUTPUT CHANNEL CONFIGURATION

Front Panel
Main Menu >Controller >More>Channels>Channels Config

Web Interface
Home >Controller >Advanced IO>Channels>Channels Configuration

Channel Configuration

Channel	Control Type	Control Source	Flash Yellow	Flash Red	Flash Alt	MMU Channel
1	Phase Vehicle	1		X	X	1
2	Phase Vehicle	2		X		2
3	Phase Vehicle	3		X	X	3
4	Phase Vehicle	4		X		4
5	Phase Vehicle	7		X		5
6	Phase Vehicle	6		X	X	6
7	Phase Vehicle	7		X		7
8	Phase Vehicle	8		X	X	8
9	Overlap	1		X	X	9
10	Overlap	2		X	X	10
11	Overlap	3		X		11
12	Overlap	4		X		12
13	Phase Ped	2				13
14	Phase Ped	4				14
15	Phase Ped	6				15
16	Phase Ped	8				16
17	Overlap	5		X	X	17
18	Overlap	6		X		18

NOTE CONTROL SOURCE 7 ASSIGNED TO CHANNEL 5 →

MAXTIME OVERLAP PROGRAMMING DETAIL FOR DEFAULT PHASING

Front Panel
Main Menu >Controller >Overlap >Overlap Parameters/Overlap Timings

Web Interface
Home >Controller >Overlap Configuration >Overlaps

Overlap Plan 1

Overlap	3	4
Type	FYA 4 - Section	FYA 4 - Section
Included Phases	2	2
Modifier Phases	7	7
Modifier Overlaps	-	-
Trail Green	0	0
Trail Yellow	0.0	0.0
Trail Red	0.0	0.0

MAXTIME OVERLAP PROGRAMMING DETAIL FOR ALTERNATE PHASING

Front Panel
Main Menu >Controller >Overlap >Overlap Parameters/Overlap Timings

Web Interface
Home >Controller >Overlap Configuration >Overlaps

In the table view of the web interface, right click on "Overlap" in the top left corner of the table. Copy the entire contents of Overlap Plan 1. Paste Overlap Plan 1 into Overlap Plan 2. Modify Overlap Plan 2 as shown below and save changes.

Overlap Plan 2

Overlap	3	4
Type	FYA 4 - Section	FYA 4 - Section
Included Phases	-	-
Modifier Phases	7	7
Modifier Overlaps	-	-
Trail Green	0	0
Trail Yellow	0.0	0.0
Trail Red	0.0	0.0

← NOTICE INCLUDED PHASE

THIS ELECTRICAL DETAIL IS FOR THE SIGNAL DESIGN: 12-1847T1
DESIGNED: MAY 2024
SEALED: 5/20/2024
REVISED: N/A

Temporary Design 1 - TMP Phase III
Electrical Detail - Sheet 2 of 2

DOCUMENT NOT CONSIDERED FINAL UNLESS ALL SIGNATURES COMPLETED

Stantec
Stantec Consulting Services Inc.
801 Jones Franklin Road-Suite 300
Raleigh, NC 27606
Tel. (919) 851-6866
Fax. (919) 851-7024
www.stantec.com
License No. F-0672

ELECTRICAL AND PROGRAMMING DETAILS FOR:

Prepared for the Offices of:
Transportation Mobility and Safety Division, Traffic Engineering & Signals Management Section, State of North Carolina, Dept. of Transportation
750 N. Greenfield Pkwy, Garner, NC 27529

NC 150 EB
at
MacLeod Drive U-Turn

Division 12 Iredell County Mooresville

PLAN DATE:	May 2024	REVIEWED BY:	J Galloway, PE
PREPARED BY:	RMM/JPG	REVIEWED BY:	R Muncey, PE

REVISIONS	INIT.	DATE

SEAL 029904 ENGINEER JASON P. GALLOWAY NORTH CAROLINA PROFESSIONAL

DocuSigned by: Jason Galloway 5/20/2024
10D1E2B40B4B46E... DATE
SIG. INVENTORY NO. 12-1847TI

11:24:07 AM
User:jgalloway
C:\Projects\Design\Electrical Details\Temporary Design\MAXTIME\R-2307B_sm_ele_12-1847t1.dgn

DocuSign Envelope ID: 01BFE048-0172-483D-84BB-AD2BA04925FD

PROJECT REFERENCE NO.	SHEET NO.
R-2307B	Sig. 89.0

DEFAULT PHASING DIAGRAM

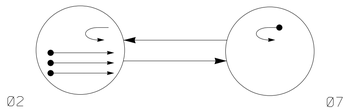

ALTERNATE PHASING DIAGRAM

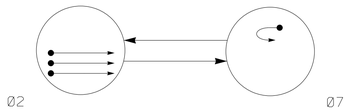

PHASING DIAGRAM DETECTION LEGEND

- DETECTED MOVEMENT
- UNDETECTED MOVEMENT (OVERLAP)
- UNSIGNALIZED MOVEMENT
- PEDESTRIAN MOVEMENT

DEFAULT PHASING TABLE OF OPERATION

SIGNAL FACE	PHASE Ø2	PHASE Ø7	FLASH
21	↑	R	R
22,23	G	R	R
71,72	(Y)	↶	(R)

ALTERNATE PHASING TABLE OF OPERATION

SIGNAL FACE	PHASE Ø2	PHASE Ø7	FLASH
21	↑	R	R
22,23	G	R	R
71,72	(R)	↶	(R)

SIGNAL FACE I.D.

All Heads L.E.D.

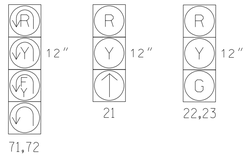

MAXTIME DETECTOR INSTALLATION CHART

DETECTOR					PROGRAMMING							
LOOP	SIZE (FT)	DISTANCE FROM STOPBAR (FT)	TURNS	NEW LOOP	CALL PHASE	DELAY TIME	EXTEND TIME	EXTEND	ADDED INITIAL	CALL	DELAY DURING GREEN	NEW CARD
2A	6X6	300	4	X	2	-	-	X	X	X	-	X
2B	6X6	300	4	X	2	-	-	X	X	X	-	X
2C	6X6	300	4	X	2	-	-	X	X	X	-	X
7A	6X40	0	2-4-2	X	7	15.0★	-	X	-	X	-	X

★ Disable delay during Alternate Phasing Operation.

2 Phase
Fully Actuated w/
Alternate Phasing
NC 150 D12-02_MOORESVILLE
CLS

NOTES

1. Refer to "Roadway Standard Drawings NCDOT" dated January 2024 and "Standard Specifications for Roads and Structures" dated January 2024.
2. Do not program signal for late night flashing operation unless otherwise directed by the Engineer.
3. Set all detector units to presence mode.
4. The Division Traffic Engineer will determine the hours of use for each phasing plan.
5. Maximum times shown in timing chart are for free-run operation only. Coordinated signal system timing values supersede these values.

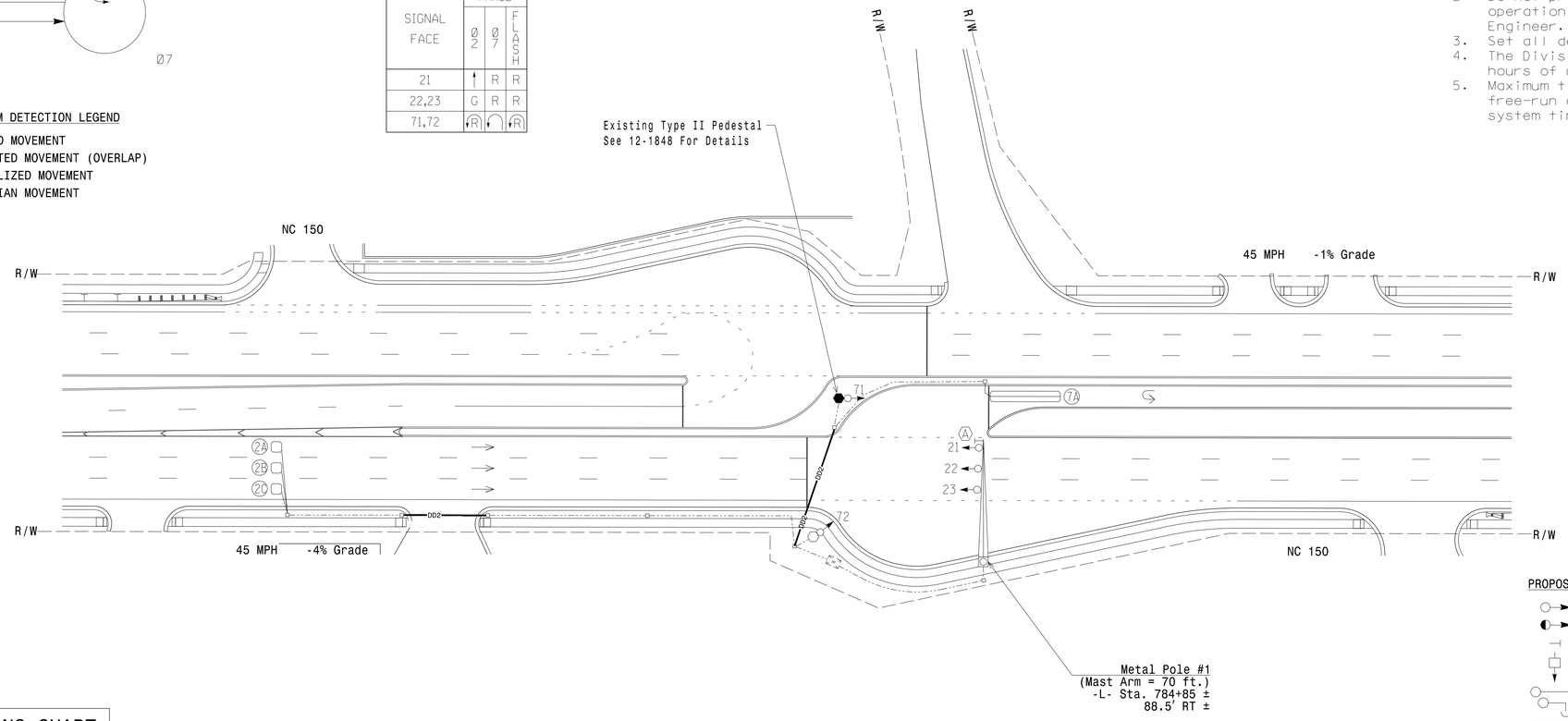

LEGEND

PROPOSED		EXISTING
	Traffic Signal Head	
	Modified Signal Head	N/A
	Sign	
	Pedestrian Signal Head With Push Button & Sign	
	Signal Pole with Guy	
	Signal Pole with Sidewalk Guy	
	Inductive Loop Detector	
	Controller & Cabinet	
	Junction Box	
	2-in Underground Conduit	
N/A	Right of Way	
	Directional Arrow	
	Metal Pole with Mastarm	
DD#	Directional Drill (#) x 2" Conduit	N/A
	Type II Signal Pedestal	
(A)	No Left Turn Sign (R3-2)	(A)

MAXTIME TIMING CHART

FEATURE	PHASE 2	PHASE 7
Walk *	–	–
Ped Clear *	–	–
Min Green	12	7
Passage *	6.0	2.0
Max 1 *	60	30
Yellow Change	4.9	3.0
Red Clear	1.6	4.1
Added Initial *	1.0	–
Maximum Initial *	34	–
Time Before Reduction *	15	–
Time To Reduce *	30	–
Minimum Gap	3.0	–
Advance Walk	–	–
Non Lock Detector	–	X
Vehicle Recall	MIN RECALL	–
Dual Entry	–	–

* These values may be field adjusted. Do not adjust Min Green and Extension times for phase 2 lower than what is shown. Min Green for all other phases should not be lower than 4 seconds.

New Installation - Final Design

DOCUMENT NOT CONSIDERED FINAL UNLESS ALL SIGNATURES COMPLETED

Stantec
Stantec Consulting Services Inc.
801 Jones Franklin Road-Suite 300
Raleigh, NC 27606
Tel. (919) 851-6866
Fax. (919) 851-7024
www.stantec.com
License No. F-0672

Prepared for the Offices of:
Transportation Mobility and Safety Division
STATE OF NORTH CAROLINA
DEPARTMENT OF TRANSPORTATION
Signal Design Section
750 N.Greenfield Pkwy,Garner,NC 27529

SCALE 0 40 1"=40'

NC 150 EB at MacLeod Drive U-Turn

Division 12 Iredell County Mooresville

PLAN DATE: May 2024 REVIEWED BY: J Galloway, PE
PREPARED BY: J Hambright REVIEWED BY: R Muncey, PE

REVISIONS	INIT.	DATE

SEAL 029904 NORTH CAROLINA PROFESSIONAL ENGINEER JASON P. GALLOWAY

DocuSigned by: Jason Galloway 5/20/2024
10D1E2B40B4B46E... DATE

SIG. INVENTORY NO. 12-1847

$$$$$$$SYSDATE$$$$$
11:25:43 AM
U:\Traffic\Projects\Design\Signal Design\R-2307B_sig_dsn_12-1847.dgn
User:jgalloway

DocuSign Envelope ID: 01BFE048-0172-483D-84BB-AD2BA04925FD

PROJECT REFERENCE NO.	SHEET NO.
R-2307B	Sig. 89.1

18 CHANNEL IP CONFLICT MONITOR PROGRAMMING DETAIL

(remove jumpers and set switches as shown)

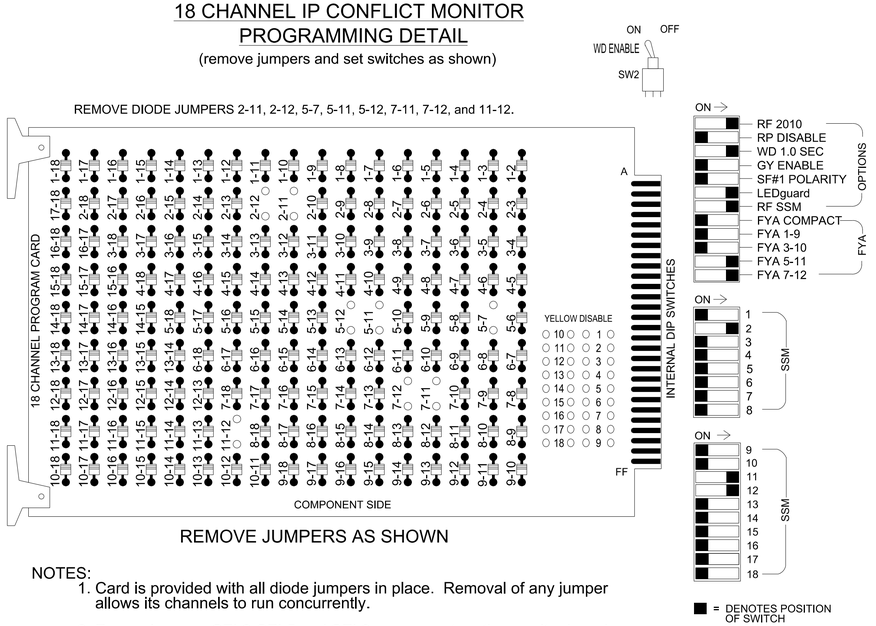

REMOVE JUMPERS AS SHOWN

NOTES:

1. Card is provided with all diode jumpers in place. Removal of any jumper allows its channels to run concurrently.
2. Ensure jumpers SEL2-SEL5 and SEL9 are present on the monitor board.
3. Ensure that the Red Enable is active at all times during normal operation.
4. Integrate monitor with Ethernet network in cabinet.

NOTES

1. To prevent "flash-conflict" problems, insert red flash program blocks for all unused vehicle load switches in the output file. The installer shall verify that signal heads flash in accordance with the signal plan.
2. Program controller to start up in phase 2 Green No Walk and 6 Phase Not On.
3. If this signal will be managed by an ATMS software, enable controller and detector logging for all detectors used at this location.
4. The cabinet and controller are part of the NC 150 D12-02_Mooresville CLS.

EQUIPMENT INFORMATION

Controller.....2070LX
Cabinet.....332 w/ Aux
Software.....Q-Free MAXTIME
Cabinet Mount.....Base
Output File Positions.....18 With Aux. Output File
Load Switches Used.....S2, S7, S10, AUX S4, AUX S5
Phases Used.....2, 7
Overlap "1".....NOT USED
Overlap "2".....NOT USED
Overlap "3".....*
Overlap "4".....*

*See overlap programming detail on sheet 2

SIGNAL HEAD HOOK-UP CHART

LOAD SWITCH NO.	S1	S2		S3	S4	S5	S6	S7	S8	S9	S10	S11	S12	AUX S1	AUX S2	AUX S3	AUX S4	AUX S5	AUX S6
CMU CHANNEL NO.	1	2		13	3	4	14	5	6	15	7	8	16	9	10	17	11	12	18
PHASE	1	2		2 PED	3	4	4 PED	7	6	6 PED	7	8	8 PED	OL1	OL2	SPARE	OL3	OL4	SPARE
SIGNAL HEAD NO.	NU	21	22,23	NU	NU	NU	NU	72★	NU	NU	71★	NU	NU	NU	NU	NU	72★	71★	NU
RED		128	128																
YELLOW		129	129					✳			✳								
GREEN			130																
RED ARROW																	A114	A101	
YELLOW ARROW																	A115	A102	
FLASHING YELLOW ARROW																	A116	A103	
GREEN ARROW		130						133			124								

NU = Not Used

✳ Denotes install load resistor. See load resistor installation detail this sheet.

★ See pictorial of head wiring in detail this sheet.

INPUT FILE POSITION LAYOUT

(front view)

		1	2	3	4	5	6	7	8	9	1O	11	12	13	14
FILE "I"	U	SLOT EMPTY	ø2 2A	ø2 2C	SLOT EMPTY	SLOT EMPTY	SLOT EMPTY	SLOT EMPTY	SLOT EMPTY	SLOT EMPTY	SLOT EMPTY	SLOT EMPTY	SLOT EMPTY	SLOT EMPTY	FS DC ISOLATOR
	L		ø2 2B	NOT USED											ST DC ISOLATOR
FILE "J"	U	SLOT EMPTY	SLOT EMPTY	SLOT EMPTY	SLOT EMPTY	ø7 7A	SLOT EMPTY	SLOT EMPTY	SLOT EMPTY	SLOT EMPTY	SLOT EMPTY	SLOT EMPTY	SLOT EMPTY	SLOT EMPTY	SLOT EMPTY
	L					NOT USED									

EX. : 1A, 2A, ETC. = LOOP NO.'S

FS = FLASH SENSE
ST = STOP TIME

INPUT FILE CONNECTION & PROGRAMMING CHART

LOOP NO.	LOOP TERMINAL	INPUT FILE POS.	PIN NO.	INPUT POINT	DETECTOR NO.	CALL PHASE	DELAY TIME	EXTEND TIME	EXTEND	ADDED INITIAL	CALL	DELAY DURING GREEN
2A	TB2-5,6	I2U	39	1	2	2			X	X	X	
2B	TB2-7,8	I2L	43	5	3	2			X	X	X	
2C	TB2-9,10	I3U	63	29	4	2			X	X	X	
7A	TB5-5,6	J5U	57	19	21 *	7	15.0		X		X	

* For the detectors to work as shown on the signal design plan, see the Detector Programming Detail for Alternate Phasing on sheet 2 of 2.

INPUT FILE POSITION LEGEND: J2L
FILE J
SLOT 2
LOWER

FYA SIGNAL WIRING DETAIL

(wire signal head as shown)

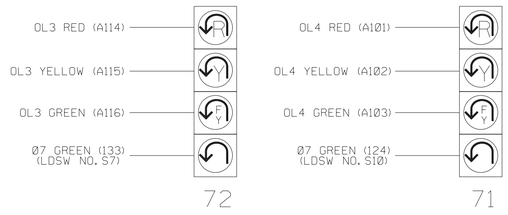

LOAD RESISTOR INSTALLATION DETAIL

(install resistor as shown below)

ACCEPTABLE VALUES	
VALUE (ohms)	WATTAGE
1.5K - 1.9K	25W (min)
2.0K - 3.0K	10W (min)

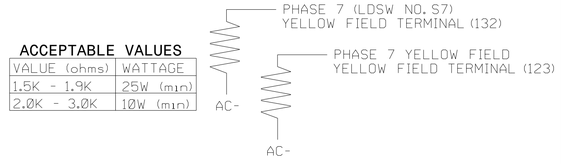

SEQUENCE DETAIL

Front Panel
Main Menu >Controller >Sequence & Phs Config>Sequences

Web Interface
Home >Controller >Sequence

Sequence 1

Ring	Sequence Data
1	2,a,7,b
2	

THIS ELECTRICAL DETAIL IS FOR
THE SIGNAL DESIGN: 12-1847
DESIGNED: MAY 2024
SEALED: 5/20/2024
REVISED: N/A

Final Design
Electrical Detail - Sheet 1 of 2

DOCUMENT NOT CONSIDERED FINAL UNLESS ALL SIGNATURES COMPLETED

Stantec
Stantec Consulting Services Inc.
801 Jones Franklin Road-Suite 300
Raleigh, NC 27606
Tel. (919) 851-6866
Fax. (919) 851-7024
www.stantec.com
License No. F-0672

ELECTRICAL AND PROGRAMMING DETAILS FOR:

Prepared for the Offices of:
Transportation Mobility and Safety Division
STATE OF NORTH CAROLINA DEPARTMENT OF TRANSPORTATION
ITS & Signals Management Section
750 N. Greenfield Pkwy, Garner, NC 27529

NC 150 EB
at
MacLeod Drive U-Turn

Division 12 Iredell County Mooresville

PLAN DATE:	May 2024	REVIEWED BY:	J Galloway, PE
PREPARED BY:	RMM/JPG	REVIEWED BY:	R Muncey, PE

REVISIONS	INIT.	DATE

SEAL 029904 NORTH CAROLINA PROFESSIONAL ENGINEER JASON P. GALLOWAY

DocuSigned by: Jason Galloway 5/20/2024
10D1E2B40B4B46E...
SIG. INVENTORY NO. 12-1847 DATE

11:26:16 AM
User:jgalloway
Z:\Projects\Designs\Design\Electrical Details\Final Design\MAXTIME\R-2307B_sm_ele_12-1847.dgn

DocuSign Envelope ID: 01BFE048-0172-483D-84BB-AD2BA04925FD

PROJECT REFERENCE NO.	SHEET NO.
R-2307B	Sig. 89.2

MAXTIME ALTERNATE PHASING ACTIVATION DETAIL

To run alternate phasing, select a Pattern that is programmed to run Overlap Plan 2 and Detector Plan 2.
A Pattern can be selected through the scheduler or manually by changing the Operational Mode.

PHASING	OVERLAP PLAN	VEH DET PLAN
ACTIVE PLAN REQUIRED TO RUN DEFAULT PHASING	1	1
ACTIVE PLAN REQUIRED TO RUN ALTERNATE PHASING	2	2

ALTERNATE PHASING CHANGE SUMMARY

THE FOLLOWING IS A SUMMARY OF WHAT TAKES PLACE WHEN OVERLAP PLAN 2 AND VEHICLE DETECTOR PLAN 2 ACTIVATE TO CALL THE "ALTERNATE PHASING":

OVERLAP PLAN 2: Modifies overlap included phases for head 71 to run protected turns only.

VEH DET PLAN 2: Reduces delay time for phase 7 call on loop 7A to 0 seconds.

MAXTIME ALTERNATE PHASING PATTERN PROGRAMMING DETAIL

Front Panel
Main Menu >Controller >Coordination >Patterns

Web Interface
Home >Controller >Coordination >Patterns

Pattern Parameters

Pattern	Veh Det Plan	Overlap Plan
*	2	2

* The Pattern number(s) are to be determined by the Division and/or City Traffic Engineer.

MAXTIME DETECTOR PROGRAMMING DETAIL FOR ALTERNATE PHASING LOOP 7A

Front Panel
Main Menu >Controller >Detector >Veh Det Plans

Web Interface
Home >Controller >Detector Configuration >Vehicle Detectors

In the table view of web interface right click on "Detector" in the top left corner of the table. Copy the entire contents of Detector Plan 1. Paste Detector Plan 1 into Detector Plan 2. Modify Detector Plan 2 as shown below and save changes.

Plan 2

7A

Detector	Call Phase	Delay
7	7	0.0

MAXTIME OVERLAP PROGRAMMING DETAIL FOR DEFAULT PHASING

Front Panel
Main Menu >Controller >Overlap >Overlap Parameters/Overlap Timings

Web Interface
Home >Controller >Overlap Configuration >Overlaps

Overlap Plan 1

Overlap	3	4
Type	FYA 4 - Section	FYA 4 - Section
Included Phases	2	2
Modifier Phases	7	7
Modifier Overlaps	-	-
Trail Green	0	0
Trail Yellow	0.0	0.0
Trail Red	0.0	0.0

MAXTIME OVERLAP PROGRAMMING DETAIL FOR ALTERNATE PHASING

Front Panel
Main Menu >Controller >Overlap >Overlap Parameters/Overlap Timings

Web Interface
Home >Controller >Overlap Configuration >Overlaps

In the table view of the web interface, right click on "Overlap" in the top left corner of the table. Copy the entire contents of Overlap Plan 1. Paste Overlap Plan 1 into Overlap Plan 2. Modify Overlap Plan 2 as shown below and save changes.

Overlap Plan 2

Overlap	3	4
Type	FYA 4 - Section	FYA 4 - Section
Included Phases	-	-
Modifier Phases	7	7
Modifier Overlaps	-	-
Trail Green	0	0
Trail Yellow	0.0	0.0
Trail Red	0.0	0.0

← NOTICE INCLUDED PHASE

OUTPUT CHANNEL CONFIGURATION

Front Panel
Main Menu >Controller >More>Channels>Channels Config

Web Interface
Home >Controller >Advanced IO>Channels>Channels Configuration

Channel Configuration

NOTE CONTROL SOURCE 7 ASSIGNED TO CHANNEL 5 →

Channel	Control Type	Control Source	Flash Yellow	Flash Red	Flash Alt	MMU Channel
1	Phase Vehicle	1		X	X	1
2	Phase Vehicle	2		X		2
3	Phase Vehicle	3		X	X	3
4	Phase Vehicle	4		X		4
5	Phase Vehicle	7		X		5
6	Phase Vehicle	6		X	X	6
7	Phase Vehicle	7		X		7
8	Phase Vehicle	8		X	X	8
9	Overlap	1		X	X	9
10	Overlap	2		X	X	10
11	Overlap	3		X		11
12	Overlap	4		X		12
13	Phase Ped	2				13
14	Phase Ped	4				14
15	Phase Ped	6				15
16	Phase Ped	8				16
17	Overlap	5		X	X	17
18	Overlap	6		X		18

THIS ELECTRICAL DETAIL IS FOR
THE SIGNAL DESIGN: 12-1847
DESIGNED: MAY 2024
SEALED: 5/20/2024
REVISED: N/A

Final Design
Electrical Detail - Sheet 2 of 2

DOCUMENT NOT CONSIDERED FINAL UNLESS ALL SIGNATURES COMPLETED

Stantec
Stantec Consulting Services Inc.
801 Jones Franklin Road-Suite 300
Raleigh, NC 27606
Tel. (919) 851-6866
Fax. (919) 851-7024
www.stantec.com
License No. F-0672

ELECTRICAL AND PROGRAMMING DETAILS FOR:

Prepared for the Offices of:
Transportation Mobility and Safety Division
STATE OF NORTH CAROLINA
DEPARTMENT OF TRANSPORTATION
ITS & Signals Management Section
750 N. Greenfield Pkwy, Garner, NC 27529

NC 150 EB
at
MacLeod Drive U-Turn

Division 12 Iredell County Mooresville

PLAN DATE:	May 2024	REVIEWED BY:	J Galloway, PE
PREPARED BY:	RMM/JPG	REVIEWED BY:	R Muncey, PE

REVISIONS	INIT.	DATE

SEAL
NORTH CAROLINA
PROFESSIONAL
SEAL 029904
ENGINEER
JASON P. GALLOWAY

DocuSigned by:
Jason Galloway 5/20/2024
10D1E2B40B4B46E DATE
SIG. INVENTORY NO. 12-1847

11:26:40 AM
User:jgalloway
U:\Projects\Designs\Design\Electrical Details\Final Design\MAXTIME\R-2307B_smuele_12-1847.dgn

DocuSign Envelope ID: 01BFE048-0172-483D-84BB-AD2BA04925FD

Design Loading for METAL POLE NO. 1

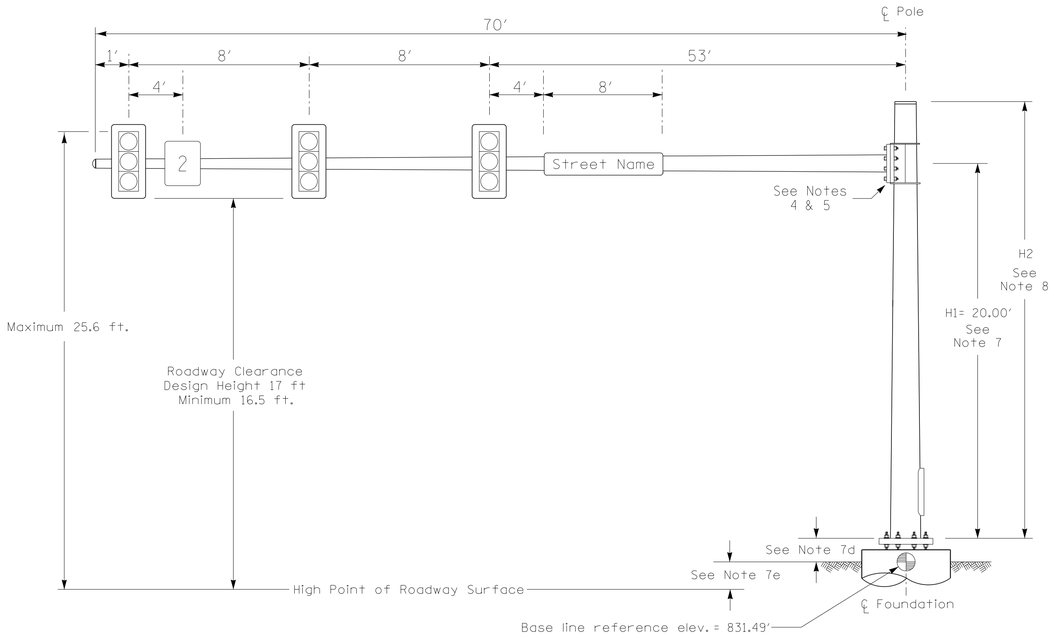

Elevation View

SPECIAL NOTE

The contractor is responsible for verifying that the mast arm attachment height (H1) will provide the "Design Height" clearance from the roadway before submitting final shop drawings for approval. Verify elevation data below which was obtained by field measurement or from available project survey data.

Elevation Data for Mast Arm Attachment (H1)

Elevation Differences for:	Pole 1	
Baseline reference point at ⊕ Foundation @ ground level	831.49 ft.	
Elevation difference at High point of roadway surface	+0.93 ft.	
Elevation difference at Edge of travelway or face of curb	+/-0.0 ft.	

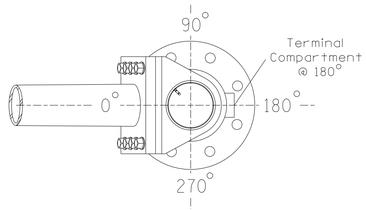

POLE RADIAL ORIENTATION

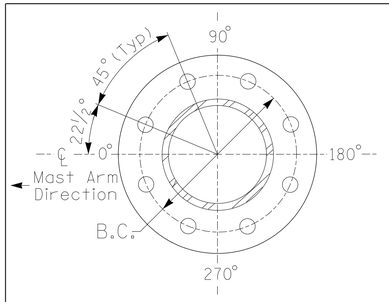

8 BOLT BASE PLATE DETAIL

See Note 6

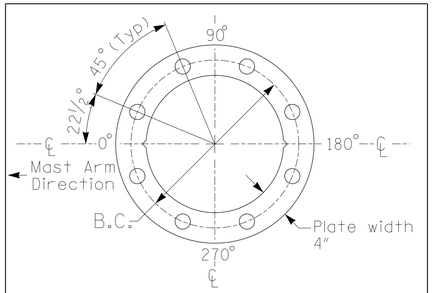

BASE PLATE TEMPLATE & ANCHOR BOLT LOCK PLATE DETAIL
For 8 Bolt Base Plate

METAL POLE No. 1

PROJECT REFERENCE NO.	SHEET NO.
R-2307B	Sig. 89.3

MAST ARM LOADING SCHEDULE

LOADING SYMBOL	DESCRIPTION	AREA	SIZE	WEIGHT
	RIGID MOUNTED SIGNAL HEAD 12"-3 SECTION-WITH BACKPLATE	9.3 S.F.	25.5"W X 52.5"L	60 LBS
2	SIGN RIGID MOUNTED	7.5 S.F.	30.0"W X 36.0"L	14 LBS
Street Name	STREET NAME SIGN RIGID MOUNTED	16.0 S.F.	24.0"W X 96.0"L	36 LBS

NOTES

DESIGN REFERENCE MATERIAL

1. Design the traffic signal structure and foundation in accordance with:
   - The 1st Edition 2015 AASHTO LRFD "Standard Specifications for Structural Supports for Highway Signs, Luminaires, and Traffic Signals, including all of the latest interim revisions.
   - The 2024 NCDOT "Standard Specifications for Roads and Structures." The latest addenda to the specifications can be found in the traffic signal project special provisions.
   - The 2024 NCDOT Roadway Standard Drawings.
   - The traffic signal project plans and special provisions.
   - The NCDOT "Metal Pole Standards" located at the following NCDOT website: https://connect.ncdot.gov/resources/safety/Pages/ITS-Design-Resources.aspx

DESIGN REQUIREMENTS

2. Design the traffic signal structure using the loading conditions shown in the elevation views. These are anticipated worst case "design loads" and may not represent the actual loads that will be applied at the time of the installation. The contractor should refer to the traffic signal plans for the actual loads that will be applied at the time of the installation.
3. Design all signal supports using force ratios that do not exceed 0.9.
4. The camber design for the mast arm deflection should provide an appearance of a low pitched arch where the tip or the free end of the mast arm does not deflect below horizontal when fully loaded.
5. A clamp-type bolted mast arm-to-pole connection may be used instead of the welded ring stiffened box connection shown as long as the connection meets all of the design requirements.
6. Design base plate with 8 anchor bolt holes. Provide 2 inch x 60 inch anchor bolts.
7. The mast arm attachment height (H1) shown is based on the following design assumptions:
   a. Mast arm slope and deflection are not considered in determining the arm attachment height as they are assumed to offset each other.
   b. Signal heads are rigidly mounted and vertically centered on the mast arm.
   c. The roadway clearance height for design is as shown in the elevation views.
   d. The top of the pole base plate is 0.75 feet above the ground elevation.
   e. Refer to the Elevation Data Chart for the elevation differences between the proposed foundation ground level and the high point of the roadway.
8. The pole manufacturer will determine the total height (H2) of each pole using the greater of the following:
   - Mast arm attachment height (H1) plus 2 feet, or
   - H1 plus 1/2 of the total height of the mast arm attachment assembly plus 1 foot.
9. If pole location adjustments are required, the contractor must gain approval from the Engineer as this may affect the mast arm lengths and arm attachment heights. The contractor may contact the Signal Design Section Senior Structural Engineer for assistance at (919) 814-5000.
10. The contractor is responsible for verifying that the mast arm length shown will allow proper positioning of the signal heads over the roadway.
11. The contractor is responsible for providing soil penetration testing data (SPT) to the pole manufacturer so site specific foundations can be designed.

NCDOT Wind Zone 5 (110 mph)

Stantec

DOCUMENT NOT CONSIDERED FINAL UNLESS ALL SIGNATURES COMPLETED

Prepared for the Offices of:
Transportation Mobility and Safety Division
NORTH CAROLINA DEPARTMENT OF TRANSPORTATION
Signal Design Section

750 N.Greenfield Pkwy.Garner,NC 27529

NC 150 EB
at
MacLeod Drive U-Turn

Division 12 Iredell County Mooresville

PLAN DATE: November 2023 REVIEWED BY: J. Galloway, PE
PREPARED BY: J. Hambright REVIEWED BY: R. Muncey, PE

SCALE: 0 N/A N/A

REVISIONS	INIT.	DATE

NORTH CAROLINA PROFESSIONAL SEAL 029904 ENGINEER JASON P. GALLOWAY

DocuSigned by: Jason Galloway 5/20/2024
10D1E2B40B4B46E... DATE

SIG. INVENTORY NO. 12-1847

5/17/2024
11:27:33 AM
User:jgalloway
C:\Users\jgalloway\Design\Metal Poles\Loading Diagrams\Loading Diagram_Single Mast Arm_12-1847.dgn

DocuSign Envelope ID: 240CC1EA-8AFD-4D42-8C82-B1465670BE8E

PROJECT REFERENCE NO.	SHEET NO.
R-2307B	Sig. 90.0

DEFAULT PHASING DIAGRAM

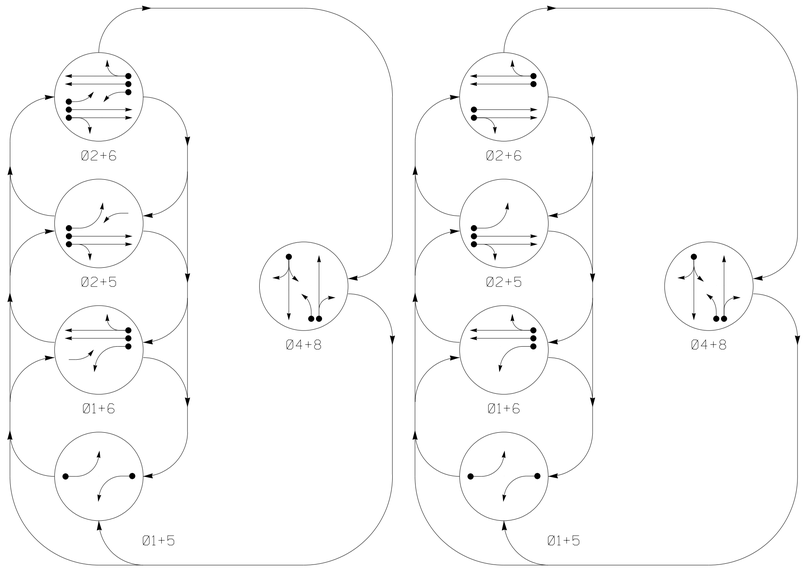

ALTERNATE PHASING DIAGRAM

DEFAULT PHASING TABLE OF OPERATION

SIGNAL FACE	PHASE Ø1+5	Ø1+6	Ø2+5	Ø2+6	Ø4+8	FLASH
11	←	←	←FY	←FY	←R	←R
21,22	R	R	G	G	R	R
41,42	R	R	R	R	G	R
51	←	←FY	←	←FY	←R	←R
61,62	R	G	R	G	R	R
81,82	R	R	R	R	G	R

ALTERNATE PHASING TABLE OF OPERATION

SIGNAL FACE	PHASE Ø1+5	Ø1+6	Ø2+5	Ø2+6	Ø4+8	FLASH
11	←	←	←R	←R	←R	←R
21,22	R	R	G	G	R	R
41,42	R	R	R	R	G	R
51	←	←R	←	←R	←R	←R
61,62	R	G	R	G	R	R
81,82	R	R	R	R	G	R

SIGNAL FACE I.D.

All Heads L.E.D.

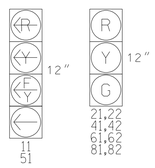

MAXTIME DETECTOR INSTALLATION CHART

DETECTOR LOOP	SIZE (FT)	DISTANCE FROM STOPBAR (FT)	TURNS	NEW LOOP	PROGRAMMING CALL PHASE	DELAY TIME	EXTEND TIME	EXTEND	ADDED INITIAL	CALL	DELAY DURING GREEN	NEW CARD
1A	6X40	0	✳	✳	1	15.0★	-	X	-	X	-	✳
					6#	3.0	-	X	-	X	X	✳
2A	6X6	300	✳	✳	2	-	-	X	-	X	-	✳
2B	6X6	300	✳	✳	2	-	-	X	-	X	-	✳
2C	6X40	0	✳	✳	2	5.0	2.0	X	-	X	X	✳
2D	6X40	0	✳	✳	2	5.0	2.0	X	-	X	X	✳
4A	6X40	0	✳	✳	4	10.0	-	X	-	X	-	✳
5A	6X40	0	✳	✳	5	15.0★	-	X	-	X	-	✳
					2#	3.0	-	X	-	X	X	✳
6A	6X6	300	✳	✳	6	-	-	X	-	X	-	✳
6B	6X6	300	✳	✳	6	-	-	X	-	X	-	✳
6C	6X40	0	✳	✳	6	5.0	2.0	X	-	X	X	✳
6D	6X40	0	✳	✳	6	5.0	2.0	X	-	X	X	✳
8A	6X40	0	✳	✳	8	3.0	-	X	-	X	-	✳
8B	6X40	0	✳	✳	8	10.0	-	X	-	X	-	✳

✳ Video Detection Area
Camera locations should be confirmed in the field by the contractor in order to provide detection of the areas indicated.

#Disable Phase(s) call during Alternate Phasing Operation.

★Reduce delay to 3 sec during Alternate Phasing Operation.

5 Phase
Fully Actuated w/
Alternate Phasing
NC 150 D12-02_MOORESVILLE
CLS

NOTES

1. Refer to "Roadway Standard Drawings NCDOT" dated January 2024 and "Standard Specifications for Roads and Structures" dated January 2024.
2. Do not program signal for late night flashing operation unless otherwise directed by the Engineer.
3. Set all detector units to presence mode.
4. Locate new cabinet so as not to obstruct sight distance of vehicles turning right on red.
5. The Division Traffic Engineer will determine the hours of use for each phasing plan.
6. Maximum times shown in timing chart are for free-run operation only. Coordinated signal system timing values supersede these values.
7. Field adjust temporary poles as needed.

PHASING DIAGRAM DETECTION LEGEND

- DETECTED MOVEMENT
- UNDETECTED MOVEMENT (OVERLAP)
- UNSIGNALIZED MOVEMENT
- PEDESTRIAN MOVEMENT

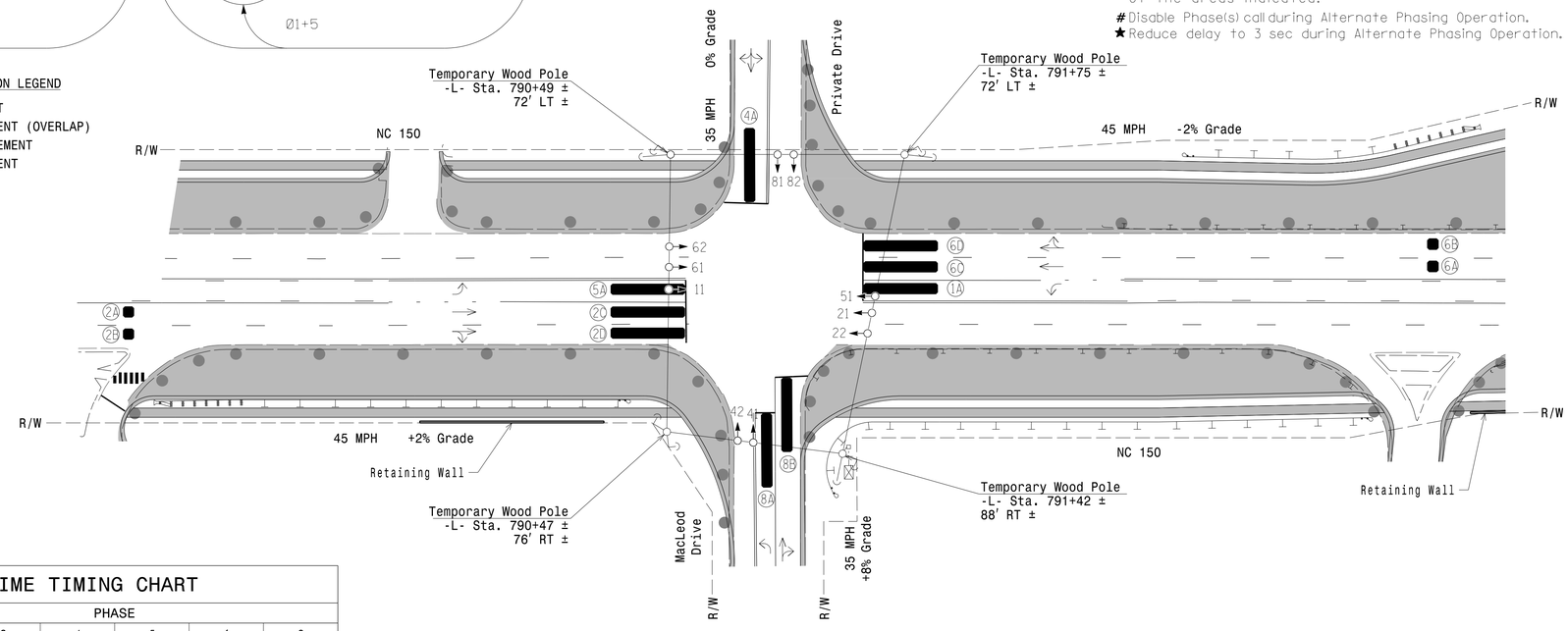

MAXTIME TIMING CHART

FEATURE	PHASE 1	2	4	5	6	8
Walk *	–	–	–	–	–	–
Ped Clear *	–	–	–	–	–	–
Min Green	7	12	7	7	12	7
Passage *	2.0	6.0	2.0	2.0	6.0	2.0
Max 1 *	15	90	35	15	90	35
Yellow Change	3.0	4.7	3.8	3.0	4.7	3.4
Red Clear	2.4	1.2	1.6	2.1	1.2	2.4
Added Initial *	–	–	–	–	–	–
Maximum Initial *	–	–	–	–	–	–
Time Before Reduction *	–	15	–	–	15	–
Time To Reduce *	–	30	–	–	30	–
Minimum Gap	–	3.0	–	–	3.0	–
Advance Walk	–	–	–	–	–	–
Non Lock Detector	X	X	X	X	X	X
Vehicle Recall	–	MIN RECALL	–	–	MIN RECALL	–
Dual Entry	–	–	X	–	–	X

* These values may be field adjusted. Do not adjust Min Green and Extension times for phases 2 and 6 lower than what is shown. Min Green for all other phases should not be lower than 4 seconds.

LEGEND

PROPOSED		EXISTING
○→	Traffic Signal Head	●→
◐→	Modified Signal Head	N/A
⊣	Sign	⊣
□↓	Pedestrian Signal Head With Push Button & Sign	■↓
○	Signal Pole with Guy	●
○	Signal Pole with Sidewalk Guy	●
▭	Inductive Loop Detector	▭
⊠	Controller & Cabinet	⊠
□	Junction Box	■
----------	2-in Underground Conduit	----------
N/A	Right of Way	— — — —
→	Directional Arrow	→
▬	Video Detection Area	N/A
▭	Construction Zone	N/A
● ● ●	Drums	N/A

Signal Upgrade
Temporary Design 1 - TMP Phase I

DOCUMENT NOT CONSIDERED FINAL UNLESS ALL SIGNATURES COMPLETED

Stantec
Stantec Consulting Services Inc.
801 Jones Franklin Road-Suite 300
Raleigh, NC 27606
Tel. (919) 851-6866
Fax. (919) 851-7024
www.stantec.com
License No. F-0672

Prepared for the Offices of:
Transportation Mobility and Safety Division
Signal Design Section
750 N.Greenfield Pkwy.Garner,NC 27529

SCALE 0 40 1"=40'

NC 150
at
MacLeod Drive

Division 12 Iredell County Mooresville

PLAN DATE: May 2024 REVIEWED BY: J Galloway, PE
PREPARED BY: J Hambright REVIEWED BY: R Muncey, PE

REVISIONS	INIT.	DATE

SEAL
NORTH CAROLINA
PROFESSIONAL
SEAL
029904
ENGINEER
JASON P. GALLOWAY

DocuSigned by: Jason Galloway 5/20/2024
10D1E2B40B4B4EE... DATE
SIG. INVENTORY NO. 12-15921I

$$$$$$SYSDATE$$$$$$
11:28:46 AM
U:\Projects\Signals\Design\Signal Design\Temporary Design\Phase 1 TEMP\R-2307B_sig_dsn_12-15921.dgn
User:TgGalloway

DocuSign Envelope ID: BFB3A99D-4E1C-44E0-AA41-C50934D9BAD0

PROJECT REFERENCE NO.	SHEET NO.
R-2307B	Sig. 90.1

18 CHANNEL IP CONFLICT MONITOR PROGRAMMING DETAIL

(remove jumpers and set switches as shown)

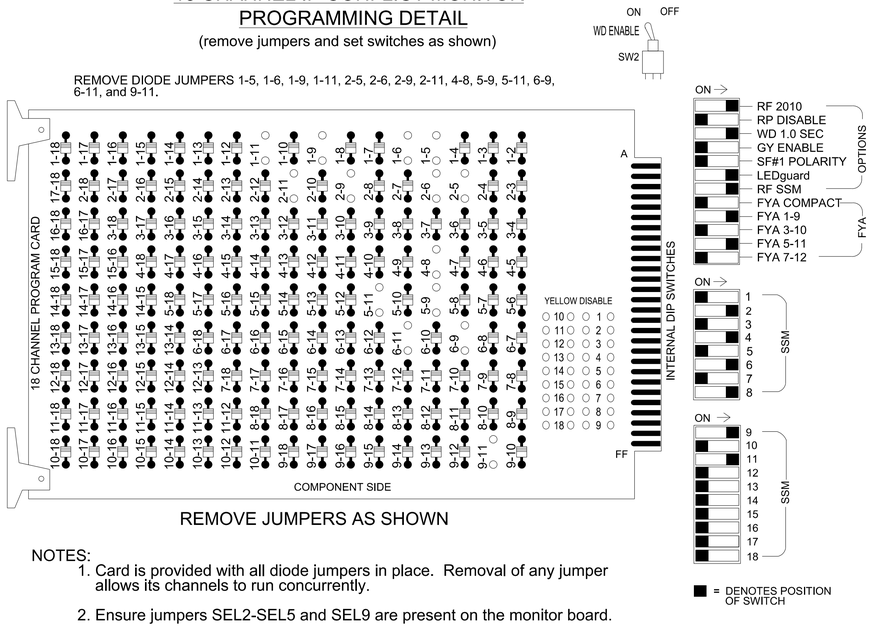

REMOVE JUMPERS AS SHOWN

NOTES:

1. Card is provided with all diode jumpers in place. Removal of any jumper allows its channels to run concurrently.
2. Ensure jumpers SEL2-SEL5 and SEL9 are present on the monitor board.
3. Ensure that the Red Enable is active at all times during normal operation.
4. Integrate monitor with Ethernet network in cabinet.

■ = DENOTES POSITION OF SWITCH

NOTES

1. To prevent "flash-conflict" problems, insert red flash program blocks for all unused vehicle load switches in the output file. The installer shall verify that signal heads flash in accordance with the signal plan.
2. Program phases 4 and 8 for Dual Entry.
3. Program controller to start up in phase 2 Green No Walk and 6 Green No Walk.
4. If this signal will be managed by an ATMS software, enable controller and detector logging for all detectors used at this location.
5. The cabinet and controller are part of the NC 150 D12-02_Mooresville CLS.

EQUIPMENT INFORMATION

Controller.....2070LX
Cabinet.....332 w/ Aux
Software.....Q-Free MAXTIME
Cabinet Mount.....Base
Output File Positions.....18 With Aux. Output File
Load Switches Used.....S1, S2, S5, S7, S8, S11, AUX S1, AUX S3
Phases Used.....1, 2, 4, 5, 6, 8
Overlap "1".....*
Overlap "2".....NOT USED
Overlap "3".....*
Overlap "4".....NOT USED

*See overlap programming detail on sheet 2

SIGNAL HEAD HOOK-UP CHART

LOAD SWITCH NO.	S1	S2	S3	S4	S5	S6	S7	S8	S9	S10	S11	S12	AUX S1	AUX S2	AUX S3	AUX S4	AUX S5	AUX S6
CMU CHANNEL NO.	1	2	13	3	4	14	5	6	15	7	8	16	9	10	17	11	12	18
PHASE	1	2	2 PED	3	4	4 PED	5	6	6 PED	7	8	8 PED	OL1	OL2	SPARE	OL3	OL4	SPARE
SIGNAL HEAD NO.	11 ★	21,22	NU	NU	41,42	NU	51 ★	61,62	NU	NU	81,82	NU	11 ★	NU	NU	51 ★	NU	NU
RED		128			101			134			107							
YELLOW	✳	129			102		✳	135			108							
GREEN		130			103			136			109							
RED ARROW													A121			A114		
YELLOW ARROW													A122			A115		
FLASHING YELLOW ARROW													A123			A116		
GREEN ARROW	127						133											

NU = Not Used

✳ Denotes install load resistor. See load resistor installation detail this sheet.

★ See pictorial of head wiring in detail this sheet.

INPUT FILE POSITION LAYOUT

(front view)

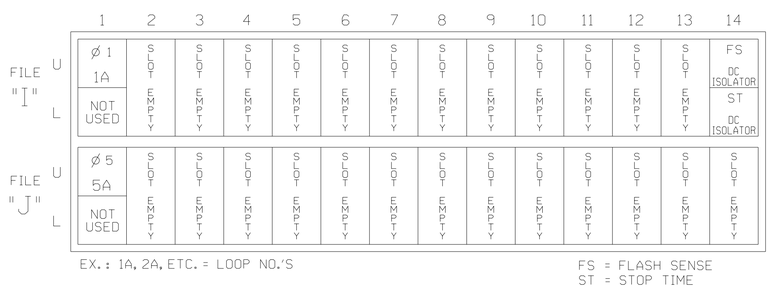

EX.: 1A, 2A, ETC. = LOOP NO.'S

FS = FLASH SENSE
ST = STOP TIME

INPUT FILE CONNECTION & PROGRAMMING CHART

LOOP NO.	LOOP TERMINAL	INPUT FILE POS.	PIN NO.	INPUT POINT	DETECTOR NO.	CALL PHASE	DELAY TIME	EXTEND TIME	EXTEND	ADDED INITIAL	CALL	DELAY DURING GREEN
1A	TB2-1,2	I1U	56	18	1	1	15.0		X		X	
				-	29	6	3.0		X		X	X
5A	TB3-1,2	J1U	55	17	15	5	15.0		X		X	
				-	31	2	3.0		X		X	X

* For the detectors to work as shown on the signal design plan, see the Detector Programming Detail for Alternate Phasing on sheet 2 of 2.

INPUT FILE POSITION LEGEND: J2L
FILE J
SLOT 2
LOWER

FYA SIGNAL WIRING DETAIL

(wire signal heads as shown)

LOAD RESISTOR INSTALLATION DETAIL

(install resistors as shown)

ACCEPTABLE VALUES	
VALUE (ohms)	WATTAGE
1.5K - 1.9K	25W (min)
2.0K - 3.0K	10W (min)

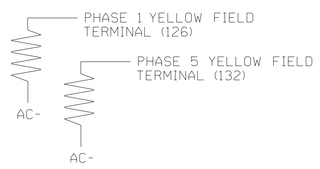

DETECTOR NOTES

1. For all loops install a video detection system for vehicle detection. Perform installation according to manufacturer's directions and NCDOT engineer-approved mounting locations to accomplish the detection schemes shown on the Signal Design Plans.
2. For loops 1A and 5A detector card placements and slots reserved for wired inputs are typical for a NCDOT installation. Inputs associated with these slots are compatible with time of day instructions located on sheet 2 of this electrical detail.

THIS ELECTRICAL DETAIL IS FOR THE SIGNAL DESIGN: 12-1592T1
DESIGNED: MAY 2024
SEALED: 5/20/2024
REVISED: N/A

Temporary Design 1 - TMP Phase I
Electrical Detail - Sheet 1 of 2

DOCUMENT NOT CONSIDERED FINAL UNLESS ALL SIGNATURES COMPLETED

Stantec
Stantec Consulting Services Inc.
801 Jones Franklin Road-Suite 300
Raleigh, NC 27606
Tel. (919) 851-6866
Fax. (919) 851-7024
www.stantec.com
License No. F-0672

ELECTRICAL AND PROGRAMMING DETAILS FOR:

Prepared for the Offices of:
Traffic Engineering Branch
Traffic Signals Management Section
750 N. Greenfield Pkwy, Garner, NC 27529

NC 150 EB
at
MacLeod Drive

Division 12 Iredell County Mooresville

PLAN DATE: May 2024 REVIEWED BY: J Galloway, PE
PREPARED BY: RMM/JPG REVIEWED BY: R Muncey, PE

REVISIONS	INIT.	DATE

SEAL 029904 NORTH CAROLINA PROFESSIONAL ENGINEER JASON GALLOWAY

DocuSigned by: Jason Galloway 5/20/2024
10D1E2B40B4B46E... DATE
SIG. INVENTORY NO. 12-1592T1

9:21:30 AM
User:rgalloway
U:\Traffic Signals\Design\Electrical Details\Temporary Design\MAXTIME\R-2307B_smeets_12-1592T1.dgn
User:rgalloway

DocuSign Envelope ID: 240CC1EA-8AFD-4D42-8C82-B1465670BE8E

PROJECT REFERENCE NO.	SHEET NO.
R-2307B	Sig. 90.2

MAXTIME OVERLAP PROGRAMMING DETAIL FOR DEFAULT PHASING

Front Panel
Main Menu >Controller >Overlap >Overlap Parameters/Overlap Timings

Web Interface
Home >Controller >Overlap Configuration >Overlaps

Overlap Plan 1

Overlap	1	3
Type	FYA 4 - Section	FYA 4 - Section
Included Phases	2	6
Modifier Phases	1	5
Modifier Overlaps	-	-
Trail Green	0	0
Trail Yellow	0.0	0.0
Trail Red	0.0	0.0

MAXTIME OVERLAP PROGRAMMING DETAIL FOR ALTERNATE PHASING

Front Panel
Main Menu >Controller >Overlap >Overlap Parameters/Overlap Timings

Web Interface
Home >Controller >Overlap Configuration >Overlaps

In the table view of the web interface, right click on "Overlap" in the top left corner of the table. Copy the entire contents of Overlap Plan 1. Paste Overlap Plan 1 into Overlap Plan 2. Modify Overlap Plan 2 as shown below and save changes.

Overlap Plan 2

Overlap	1	3
Type	FYA 4 - Section	FYA 4 - Section
Included Phases	-	-
Modifier Phases	1	5
Modifier Overlaps	-	-
Trail Green	0	0
Trail Yellow	0.0	0.0
Trail Red	0.0	0.0

← NOTICE INCLUDED PHASE

MAXTIME DETECTOR PROGRAMMING DETAIL FOR ALTERNATE PHASING LOOPS 1A & 5A

Front Panel
Main Menu >Controller >Detector >Veh Det Plans

Web Interface
Home >Controller >Detector Configuration >Vehicle Detectors

In the table view of web interface right click on "Detector" in the top left corner of the table. Copy the entire contents of Detector Plan 1. Paste Detector Plan 1 into Detector Plan 2. Modify Detector Plan 2 as shown below and save changes.

Plan 2

1A

Detector	Call Phase	Delay
1	1	3.0
29	0	-

5A

Detector	Call Phase	Delay
15	5	3.0
31	0	-

MAXTIME ALTERNATE PHASING ACTIVATION DETAIL

To run alternate phasing, select a Pattern that is programmed to run Overlap Plan 2 and Detector Plan 2.
A Pattern can be selected through the scheduler or manually by changing the Operational Mode.

PHASING	OVERLAP PLAN	VEH DET PLAN
ACTIVE PLAN REQUIRED TO RUN DEFAULT PHASING	1	1
ACTIVE PLAN REQUIRED TO RUN ALTERNATE PHASING	2	2

ALTERNATE PHASING CHANGE SUMMARY

THE FOLLOWING IS A SUMMARY OF WHAT TAKES PLACE WHEN OVERLAP PLAN 2 AND VEHICLE DETECTOR PLAN 2 ACTIVATE TO CALL THE "ALTERNATE PHASING":

OVERLAP PLAN 2: Modifies overlap included phases for heads 11 and 51 to run protected turns only.

VEH DET PLAN 2: Disables phase 6 call on loop 1A and reduces delay time for phase 1 call on loop 1A to 3 seconds.

Disables phase 2 call on loop 5A and reduces delay time for phase 5 call on loop 5A to 3 seconds.

THIS ELECTRICAL DETAIL IS FOR THE SIGNAL DESIGN: 12-1592T1
DESIGNED: MAY 2024
SEALED: 5/20/2024
REVISED: N/A

MAXTIME ALTERNATE PHASING PATTERN PROGRAMMING DETAIL

Front Panel
Main Menu >Controller >Coordination >Patterns

Web Interface
Home >Controller >Coordination >Patterns

Pattern Parameters

Pattern	Veh Det Plan	Overlap Plan
*	2	2

* The Pattern number(s) are to be determined by the Division and/or City Traffic Engineer.

Temporary Design 1 - TMP Phase I
Electrical Detail - Sheet 2 of 2

DOCUMENT NOT CONSIDERED FINAL UNLESS ALL SIGNATURES COMPLETED

Stantec
Stantec Consulting Services Inc.
801 Jones Franklin Road-Suite 300
Raleigh, NC 27606
Tel. (919) 851-6866
Fax. (919) 851-7024
www.stantec.com
License No. F-0672

ELECTRICAL AND PROGRAMMING DETAILS FOR:

Prepared for the Offices of:
Transportation Mobility and Safety Division
NORTH CAROLINA DEPARTMENT OF TRANSPORTATION
Traffic Engineering Branch
Traffic Signals & Signals Management Section
750 N. Greenfield Pkwy, Garner, NC 27529

NC 150 EB
at
MacLeod Drive

Division 12 | Iredell County | Mooresville

PLAN DATE:	May 2024	REVIEWED BY:	J Galloway, PE
PREPARED BY:	RMM/JPG	REVIEWED BY:	R Muncey, PE

REVISIONS	INIT.	DATE

SEAL 029904 NORTH CAROLINA PROFESSIONAL ENGINEER JASON P. GALLOWAY

DocuSigned by: Jason Galloway 5/20/2024
10D1E2B40B4B46E...
STD. INVENTORY NO. 12-1592T1

11:29:42 AM
User:rpilloway
Z:\Signals\Design\Electrical Details\Temporary Design\MAXTIME\R-2307B_sm_ele_12-1592t1.dgn

DocuSign Envelope ID: 240CC1EA-8AFD-4D42-8C82-B1465670BE8E

PROJECT REFERENCE NO.	SHEET NO.
R-2307B	Sig. 91.0

PHASING DIAGRAM

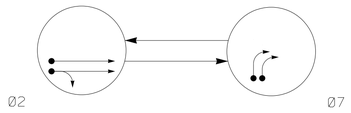

PHASING DIAGRAM DETECTION LEGEND

- DETECTED MOVEMENT
- UNDETECTED MOVEMENT (OVERLAP)
- UNSIGNALIZED MOVEMENT
- PEDESTRIAN MOVEMENT

TABLE OF OPERATION

SIGNAL FACE	PHASE Ø2	PHASE Ø7	FLASH
21	↑	R	R
22	G	R	R
71,72	R	→	R

SIGNAL FACE I.D.

All Heads L.E.D.

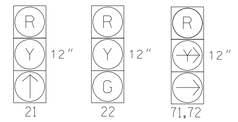

MAXTIME DETECTOR INSTALLATION CHART

DETECTOR					PROGRAMMING						
LOOP	SIZE (FT)	DISTANCE FROM STOPBAR (FT)	TURNS	NEW LOOP	CALL PHASE	DELAY TIME	EXTEND TIME	EXTEND	ADDED INITIAL	CALL	DELAY DURING GREEN	NEW CARD
2A	6X6	300	✳	✳	2	-	-	X	-	X	-	✳
2B	6X6	300	✳	✳	2	-	-	X	-	X	-	✳
2C	6X40	0	✳	✳	2	5.0	2.0	X	-	X	X	✳
2D	6X40	0	✳	✳	2	5.0	2.0	X	-	X	X	✳
7A	6X40	0	✳	✳	7	-	-	X	-	X	-	✳
7B	6X40	0	✳	✳	7	-	-	X	-	X	-	✳

✳ Video Detection Area
Camera locations should be confirmed in the field by the contractor in order to provide detection of the areas indicated.

2 Phase
Fully Actuated
NC 150 D12-02_MOORESVILLE
CLS

NOTES

1. Refer to "Roadway Standard Drawings NCDOT" dated January 2024 and "Standard Specifications for Roads and Structures" dated January 2024.
2. Do not program signal for late night flashing operation unless otherwise directed by the Engineer.
3. Reposition existing signal head number #22.
4. Set all detector units to presence mode.
5. Maximum times shown in timing chart are for free-run operation only. Coordinated signal system timing values supersede these values.

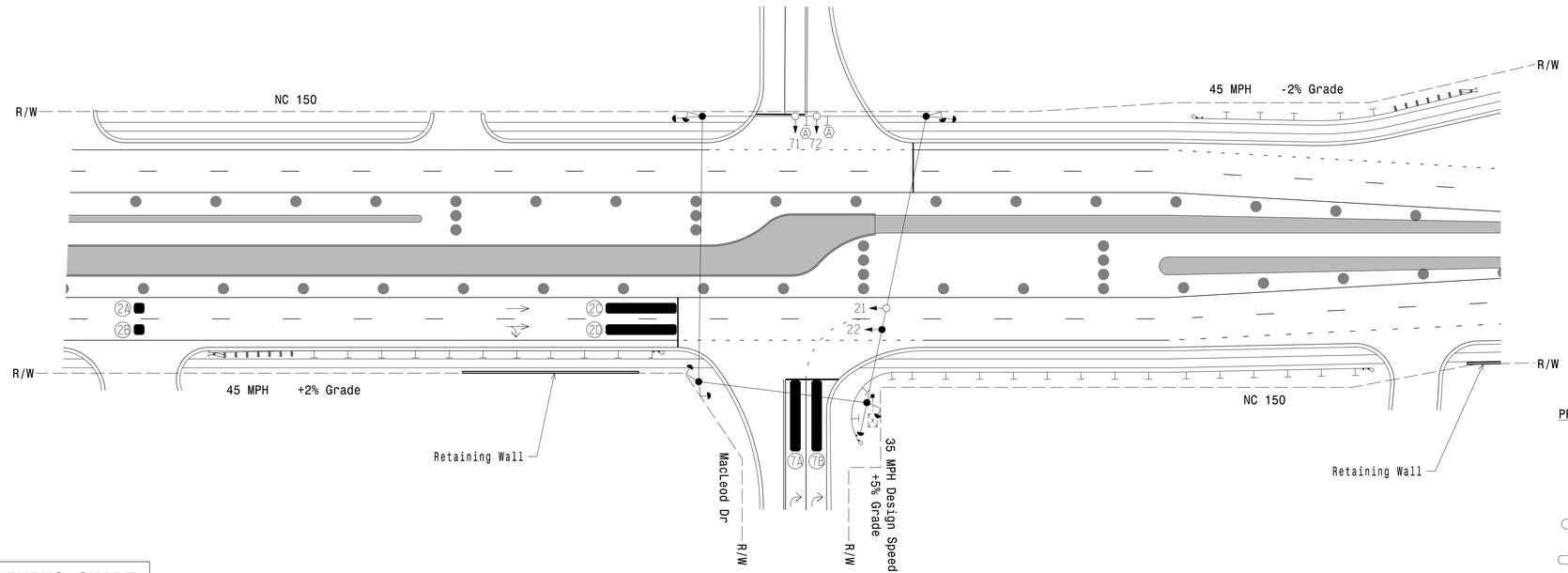

MAXTIME TIMING CHART

FEATURE	PHASE 2	PHASE 7
Walk *	–	–
Ped Clear *	–	–
Min Green	12	7
Passage *	6.0	2.0
Max 1 *	60	30
Yellow Change	4.3	3.0
Red Clear	1.6	1.9
Added Initial *	–	–
Maximum Initial *	–	–
Time Before Reduction *	15	–
Time To Reduce *	30	–
Minimum Gap	3.0	–
Advance Walk	–	–
Non Lock Detector	X	X
Vehicle Recall	MIN RECALL	–
Dual Entry	–	–

* These values may be field adjusted. Do not adjust Min Green and Extension times for phase 2 lower than what is shown. Min Green for all other phases should not be lower than 4 seconds.

LEGEND

PROPOSED		EXISTING
	Traffic Signal Head	
	Modified Signal Head	N/A
	Sign	
	Pedestrian Signal Head With Push Button & Sign	
	Signal Pole with Guy	
	Signal Pole with Sidewalk Guy	
	Inductive Loop Detector	
	Controller & Cabinet	
	Junction Box	
	2-in Underground Conduit	
N/A	Right of Way	
	Directional Arrow	
	Video Detection Area	N/A
	Construction Zone	N/A
	Drums	N/A
Ⓐ	"NO TURN ON RED" Sign (R10-11)	Ⓐ

Signal Upgrade
Temporary Design 2 - TMP Phase III

DOCUMENT NOT CONSIDERED FINAL UNLESS ALL SIGNATURES COMPLETED

Stantec
Stantec Consulting Services Inc.
801 Jones Franklin Road-Suite 300
Raleigh, NC 27606
Tel. (919) 851-6866
Fax. (919) 851-7024
www.stantec.com
License No. F-0672

Prepared for the Offices of:
Transportation Mobility and Safety Division
State of North Carolina Department of Transportation
Signal Design Section
750 N.Greenfield Pkwy,Garner,NC 27529

NC 150 EB
at
MacLeod Drive

Division 12 Iredell County Mooresville

PLAN DATE:	May 2024	REVIEWED BY:	J Galloway, PE
PREPARED BY:	J Hambright	REVIEWED BY:	R Muncey, PE

SCALE: 0 40 — 1"=40'

REVISIONS	INIT.	DATE

SEAL 029904 NORTH CAROLINA PROFESSIONAL ENGINEER JASON F. GALLOWAY

DocuSigned by: Jason Galloway 5/20/2024
10D1E2840B4B46E... SIG. INVENTORY NO. 12-1592T2 DATE

$$$$$$$SYSDATE$$$$$$
11:31:46 AM
User:jgallowa
Design*Signal Design*Temporary Design*Phase 3 TEMP*R-2307B_sig_dsn_12-159272.dgn
User:jgallowa

DocuSign Envelope ID: 240CC1EA-8AFD-4D42-8C82-B1465670BE8E

18 CHANNEL IP CONFLICT MONITOR PROGRAMMING DETAIL

(set switches as shown)

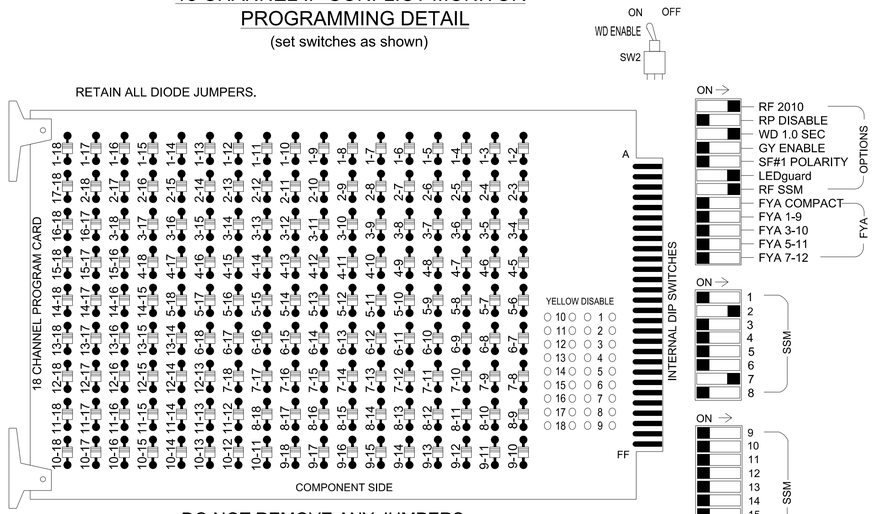

DO NOT REMOVE ANY JUMPERS

NOTES:

1. Card is provided with all diode jumpers in place. Removal of any jumper allows its channels to run concurrently.
2. Ensure jumpers SEL2-SEL5 and SEL9 are present on the monitor board.
3. Ensure that the Red Enable is active at all times during normal operation.
4. Integrate monitor with Ethernet network in cabinet.

NOTES

1. To prevent "flash-conflict" problems, insert red flash program blocks for all unused vehicle load switches in the output file. The installer shall verify that signal heads flash in accordance with the signal plan.
2. Return controller to Factory Defaults before programming per this electrical detail.
3. Program controller to start up in phase 2 Green No Walk and Phase 6 Not On.
4. If this signal will be managed by an ATMS software, enable controller and detector logging for all detectors used at this location.
5. The cabinet and controller are part of the NC 150 D12-02_Mooresville CLS.

EQUIPMENT INFORMATION

Controller.....2070LX
Cabinet.....332 w/ Aux
Software.....Q-Free MAXTIME
Cabinet Mount.....Base
Output File Positions.....18 With Aux. Output File
Load Switches Used.....S2, S10
Phases Used.....2, 7
Overlap "1".....NOT USED
Overlap "2".....NOT USED
Overlap "3".....NOT USED
Overlap "4".....NOT USED

PROJECT REFERENCE NO.	SHEET NO.
R-2307B	Sig. 91.1

SIGNAL HEAD HOOK-UP CHART

LOAD SWITCH NO.	S1	S2		S3	S4	S5	S6	S7	S8	S9	S10	S11	S12	AUX S1	AUX S2	AUX S3	AUX S4	AUX S5	AUX S6
CMU CHANNEL NO.	1	2		13	3	4	14	5	6	15	7	8	16	9	10	17	11	12	18
PHASE	1	2		2 PED	3	4	4 PED	5	6	6 PED	7	8	7 PED	OL1	OL2	SPARE	OL3	OL4	SPARE
SIGNAL HEAD NO.	NU	21	22	NU	NU	NU	NU	NU	NU	NU	71,72	NU	NU	NU	NU	NU	NU	NU	NU
RED		128	128								122								
YELLOW		129	129																
GREEN			130																
RED ARROW																			
YELLOW ARROW											123								
GREEN ARROW		130									124								

NU = Not Used

SEQUENCE DETAIL

Front Panel
Main Menu >Controller >Sequence & Phs Config>Sequences

Web Interface
Home >Controller >Sequence

Sequence 1

Ring	Sequence Data
1	2,a,7,b
2	

INPUT FILE POSITION LAYOUT

(front view)

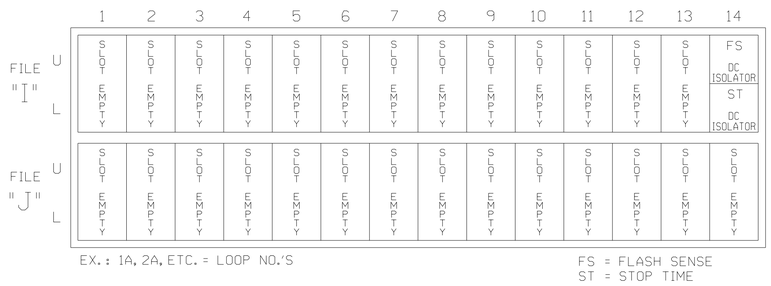

EX.: 1A, 2A, ETC. = LOOP NO.'S

FS = FLASH SENSE
ST = STOP TIME

DETECTOR NOTES

1. For all loops install a video detection system for vehicle detection. Perform installation according to manufacturer's directions and NCDOT engineer-approved mounting locations to accomplish the detection schemes shown on the Signal Design Plans.

LOAD RESISTOR INSTALLATION DETAIL

(install resistors as shown)

ACCEPTABLE VALUES

VALUE (ohms)	WATTAGE
1.5K - 1.9K	25W (min)
2.0K - 3.0K	10W (min)

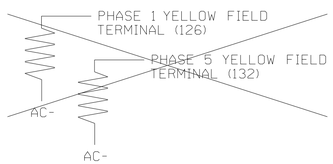

IMPORTANT! Remove resistor from field terminal as shown above, if present.

THIS ELECTRICAL DETAIL IS FOR
THE SIGNAL DESIGN: 12-1592T2
DESIGNED: MAY 2024
SEALED: 5/20/2024
REVISED: N/A

Temporary Design 2 - TMP Phase III
Electrical Detail

DOCUMENT NOT CONSIDERED FINAL UNLESS ALL SIGNATURES COMPLETED

Stantec
Stantec Consulting Services Inc.
801 Jones Franklin Road-Suite 300
Raleigh, NC 27606
Tel. (919) 851-6866
Fax. (919) 851-7024
www.stantec.com
License No. F-0672

ELECTRICAL AND PROGRAMMING DETAILS FOR:

Prepared for the Offices of:
Transportation Mobility and Safety Division
State of North Carolina Department of Transportation
Traffic Engineering & Signals Management Section
750 N. Greenfield Pkwy, Garner, NC 27529

NC 150 EB
at
MacLeod Drive

Division 12 Iredell County Mooresville

PLAN DATE:	May 2024	REVIEWED BY:	J Galloway, PE
PREPARED BY:	RMM/JPG	REVIEWED BY:	R Muncey, PE

REVISIONS	INIT.	DATE

SEAL 029904 NORTH CAROLINA PROFESSIONAL ENGINEER JASON P. GALLOWAY

DocuSigned by: Jason Galloway 5/20/2024
10D1E2840B4846E... DATE

SIG. INVENTORY NO. 12-1592T2

11:32:43 AM
User:jgalloway

DocuSign Envelope ID: 240CC1EA-8AFD-4D42-8C82-B1465670BE8E

PROJECT REFERENCE NO.	SHEET NO.
R-2307B	Sig. 92.0

2 Phase
Fully Actuated
NC 150 D12-02_MOORESVILLE
CLS

PHASING DIAGRAM

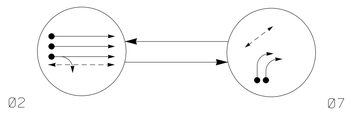

PHASING DIAGRAM DETECTION LEGEND

- DETECTED MOVEMENT
- UNDETECTED MOVEMENT (OVERLAP)
- UNSIGNALIZED MOVEMENT
- PEDESTRIAN MOVEMENT

TABLE OF OPERATION

SIGNAL FACE	PHASE Ø2	PHASE Ø7	PHASE FLASH
21,22,23	G	R	R
71,72	R	→	R
P21,P22	W	DW	DRK
P71,P72	DW	W	DRK

SIGNAL FACE I.D.

All Heads L.E.D.

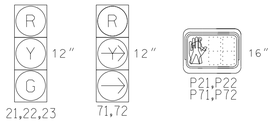

MAXTIME DETECTOR INSTALLATION CHART

DETECTOR					PROGRAMMING							
LOOP	SIZE (FT)	DISTANCE FROM STOPBAR (FT)	TURNS	NEW LOOP	CALL PHASE	DELAY TIME	EXTEND TIME	EXTEND	ADDED INITIAL	CALL	DELAY DURING GREEN	NEW CARD
2A	6X6	300	5	X	2	-	-	X	X	X	-	X
2B	6X6	300	5	X	2	-	-	X	X	X	-	X
2C	6X6	300	5	X	2	-	-	X	X	X	-	X
7A	6X40	0	2-4-2	X	7	-	-	X	-	X	-	X
7B	6X40	0	2-4-2	X	7	-	-	X	-	X	-	X

NOTES

1. Refer to "Roadway Standard Drawings NCDOT" dated January 2024 and "Standard Specifications for Roads and Structures" dated January 2024.
2. Do not program signal for late night flashing operation unless otherwise directed by the Engineer.
3. Set all detector units to presence mode.
4. Omit "WALK" and flashing "DON'T WALK" with no pedestrian calls.
5. Program pedestrian heads to countdown the flashing "Don't Walk" time only.
6. Maximum times shown in timing chart are for free-run operation only. Coordinated signal system timing values supersede these values.
7. Pedestrian pedestals are conceptual and shown for reference only. See 2024 NCDOT Roadway Standard Drawings for push button location details.

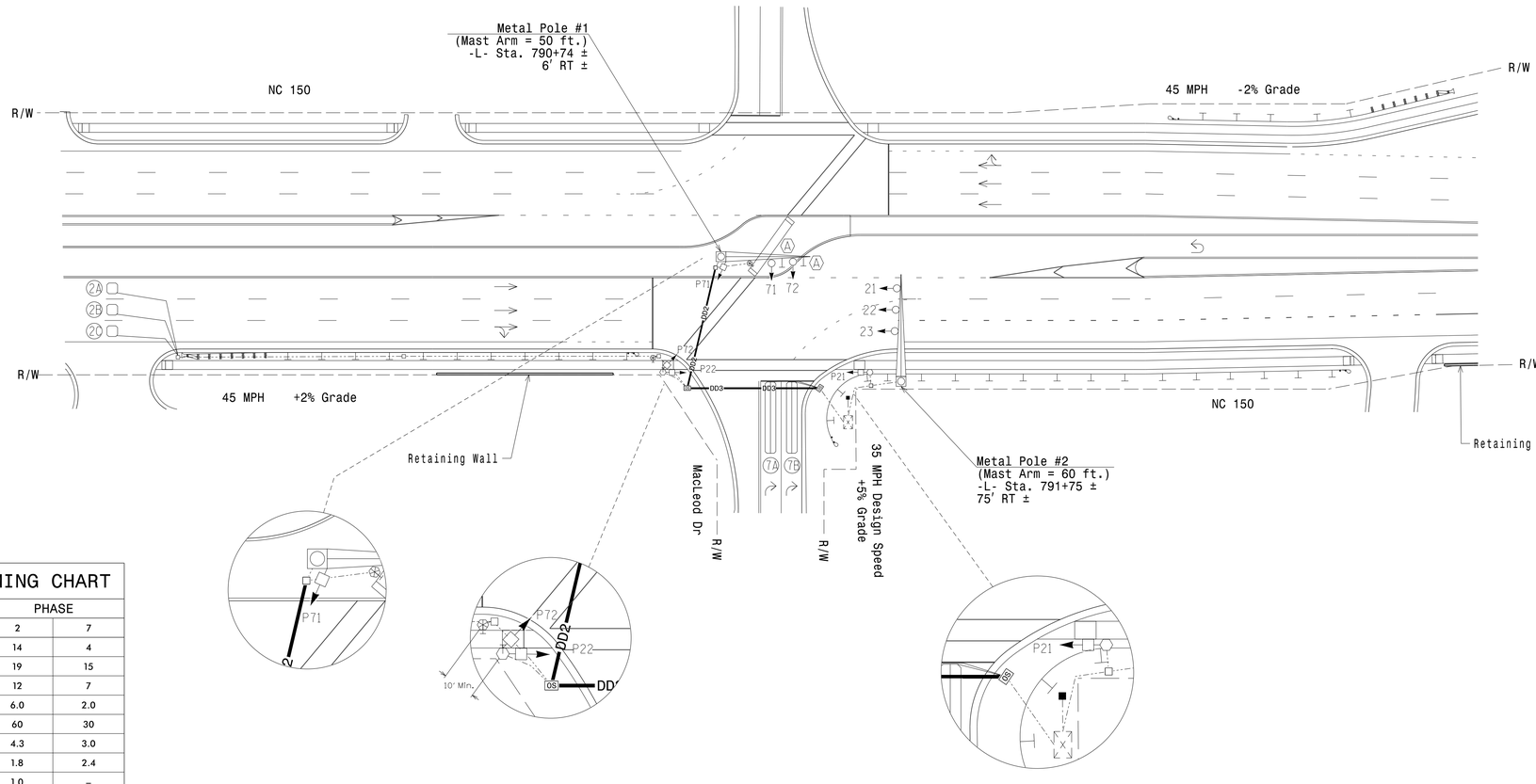

MAXTIME TIMING CHART

FEATURE	PHASE 2	PHASE 7
Walk *	14	4
Ped Clear *	19	15
Min Green	12	7
Passage *	6.0	2.0
Max 1 *	60	30
Yellow Change	4.3	3.0
Red Clear	1.8	2.4
Added Initial *	1.0	–
Maximum Initial *	34	–
Time Before Reduction *	15	–
Time To Reduce *	30	–
Minimum Gap	3.0	–
Advance Walk	7	–
Non Lock Detector	–	X
Vehicle Recall	MIN RECALL	–
Dual Entry	–	–

* These values may be field adjusted. Do not adjust Min Green and Extension times for phase 2 lower than what is shown. Min Green for all other phases should not be lower than 4 seconds.

LEGEND

PROPOSED		EXISTING
	Traffic Signal Head	
	Modified Signal Head	N/A
	Sign	
	Pedestrian Signal Head With Push Button & Sign	
	Signal Pole with Guy	
	Signal Pole with Sidewalk Guy	
	Inductive Loop Detector	
	Controller & Cabinet	
	Junction Box	
	2-in Underground Conduit	
N/A	Right of Way	
	Directional Arrow	
	Metal Pole with Mastarm	
DD#	Directional Drill (#) x 2" Conduit	N/A
	Type I Pushbutton Post	
	Type II Signal Pedestal	
OS	Oversized Junction Box	
A	"NO TURN ON RED" Sign (R10-11)	A

Signal Upgrade - Final Design

DOCUMENT NOT CONSIDERED FINAL UNLESS ALL SIGNATURES COMPLETED

Stantec
Stantec Consulting Services Inc.
801 Jones Franklin Road-Suite 300
Raleigh, NC 27606
Tel. (919) 851-6866
Fax. (919) 851-7024
www.stantec.com
License No. F-0672

Prepared for the Offices of:
Transportation Mobility and Safety Division
STATE OF NORTH CAROLINA
DEPARTMENT OF TRANSPORTATION
Signal Design Section
750 N.Greenfield Pkwy.Garner,NC 27529

NC 150 EB
at
MacLeod Drive

Division 12 Iredell County Mooresville

PLAN DATE:	May 2024	REVIEWED BY:	J Galloway, PE
PREPARED BY:	J Hambright	REVIEWED BY:	R Muncey, PE

SCALE 0 40 1"=40'

REVISIONS	INIT.	DATE

SEAL
NORTH CAROLINA PROFESSIONAL SEAL 029904 ENGINEER JASON P. GALLOWAY

DocuSigned by: Jason Galloway 5/20/2024
10D1E2B4084B4EE... DATE
SIG. INVENTORY NO. 12-1592

$$$$$$SYSDATE$$$$$
11:34:29 AM
U:\Mooresville\Signals\Design\Signal Design\R-2307B_sig_dsn_12-1592.dgn
User:jgalloway

DocuSign Envelope ID: 240CC1EA-8AFD-4D42-8C82-B1465670BE8E

PROJECT REFERENCE NO.	SHEET NO.
R-2307B	Sig. 92.1

18 CHANNEL IP CONFLICT MONITOR PROGRAMMING DETAIL

(remove jumpers and set switches as shown)

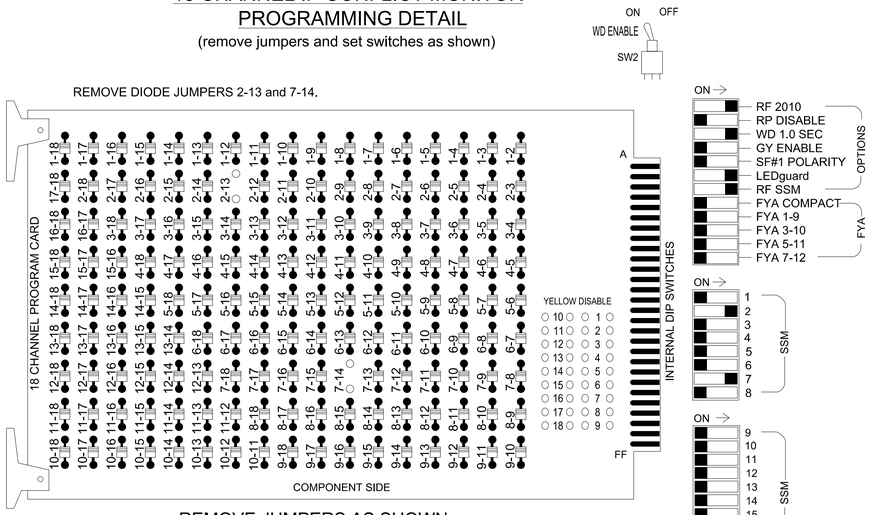

REMOVE JUMPERS AS SHOWN

NOTES:

1. Card is provided with all diode jumpers in place. Removal of any jumper allows its channels to run concurrently.
2. Ensure jumpers SEL2-SEL5 and SEL9 are present on the monitor board.
3. Ensure that the Red Enable is active at all times during normal operation.
4. Integrate monitor with Ethernet network in cabinet.

NOTES

1. To prevent "flash-conflict" problems, insert red flash program blocks for all unused vehicle load switches in the output file. The installer shall verify that signal heads flash in accordance with the signal plan.
2. Program controller to start up in phase 2 Green No Walk and 6 Phase Not On.
3. If this signal will be managed by an ATMS software, enable controller and detector logging for all detectors used at this location.
4. The cabinet and controller are part of the NC 150 D12-02_Mooresville CLS.

EQUIPMENT INFORMATION

Controller.....2070LX
Cabinet.....332 w/ Aux
Software.....Q-Free MAXTIME
Cabinet Mount.....Base
Output File Positions.....18 With Aux. Output File
Load Switches Used.....S2, S3, S6, S10
Phases Used.....2, 2PED, 7, 7PED
Overlap "1".....NOT USED
Overlap "2".....NOT USED
Overlap "3".....NOT USED
Overlap "4".....NOT USED

SIGNAL HEAD HOOK-UP CHART

LOAD SWITCH NO.	S1	S2	S3	S4	S5	S6	S7	S8	S9	S10	S11	S12	AUX S1	AUX S2	AUX S3	AUX S4	AUX S5	AUX S6
CMU CHANNEL NO.	1	2	13	3	4	14	5	6	15	7	8	16	9	10	17	11	12	18
PHASE	1	2	2 PED	3	4	7 PED	5	6	6 PED	7	8	8 PED	OL1	OL2	SPARE	OL3	OL4	SPARE
SIGNAL HEAD NO.	NU	21,22, 23	P21, P22	NU	NU	P71, P72	NU	NU	NU	71,72	NU	NU	NU	NU	NU	NU	NU	NU
RED		128								122								
YELLOW		129																
GREEN		130																
RED ARROW																		
YELLOW ARROW										123								
GREEN ARROW										124								
✋			113			104												
🚶			115			106												

NU = Not Used

COUNTDOWN PEDESTRIAN SIGNAL OPERATION

Countdown Ped Signals are required to display timing only during Ped Clearance Interval. Consult Ped Signal Module user's manual for instructions on selecting this feature.

INPUT FILE POSITION LAYOUT

(front view)

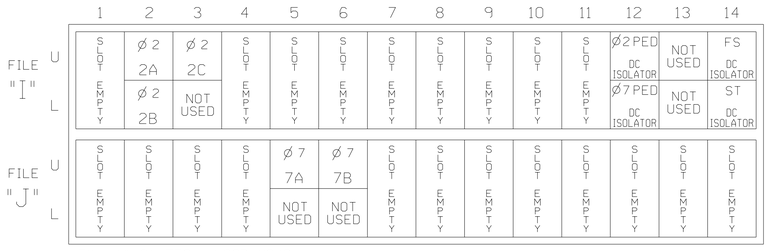

EX.: 1A, 2A, ETC. = LOOP NO.'S

FS = FLASH SENSE
ST = STOP TIME

INPUT FILE CONNECTION & PROGRAMMING CHART

LOOP NO.	LOOP TERMINAL	INPUT FILE POS.	PIN NO.	INPUT POINT	DETECTOR NO.	CALL PHASE	DELAY TIME	EXTEND TIME	EXTEND	ADDED INITIAL	CALL	DELAY DURING GREEN
2A	TB2-5,6	I2U	39	1	2	2			X	X	X	
2B	TB2-7,8	I2L	43	5	3	2			X	X	X	
2C	TB2-9,10	I3U	63	29	4	2			X	X	X	
7A	TB5-5,6	J5U	57	19	21	7			X		X	
7B	TB5-9,10	J6U	42	4	22	7			X		X	
PED PUSH BUTTONS												
P21,P22	TB8-4,6	I12U	67	33	2	PED 2						
P71,P72	TB8-5,6	I12L	69	35	4	PED 7						

NOTE:
INSTALL DC ISOLATORS IN INPUT FILE SLOTS I12.

INPUT FILE POSITION LEGEND: J2L

FILE J
SLOT 2
LOWER

PED 7 PROGRAMMING DETAIL

Front Panel
Main Menu >Controller >Detector >Ped Det Plans

Web Interface
Home >Controller >Detector Configuration >Pedestrian Detector

Plan 1

NOTICE PHASE 7 PED ASSIGNED TO DETECTOR 4 PED →

Detector	Descripton	Call Phase	Call Overlap
2		2	0
4		7	0
6		6	0
8		8	0

Front Panel
Main Menu >Controller >More>Channels>Channels Config

Web Interface
Home >Controller >Advanced IO>Channels>Channels Configuration

Channel Configuration

NOTICE PHASE 7 PED ASSIGNED TO CHANNEL 14 →

Channel	Control Type	Control Source	Flash Yellow	Flash Red	Flash Alt	MMU Channel
1	Phase Vehicle	1		X	X	1
2	Phase Vehicle	2		X		2
3	Phase Vehicle	3		X	X	3
4	Phase Vehicle	4		X		4
5	Phase Vehicle	5		X		5
6	Phase Vehicle	6		X	X	6
7	Phase Vehicle	7		X		7
8	Phase Vehicle	8		X	X	8
9	Overlap	1		X	X	9
10	Overlap	2		X	X	10
11	Overlap	3		X		11
12	Overlap	4		X		12
13	Phase Ped	2				13
14	Phase Ped	7				14
15	Phase Ped	6				15
16	Phase Ped	8				16
17	Overlap	5		X	X	17
18	Overlap	6		X		18

SEQUENCE DETAIL

Front Panel
Main Menu >Controller >Sequence & Phs Config>Sequences

Web Interface
Home >Controller >Sequence

Sequence 1

Ring	Sequence Data
1	2,a,7,b
2	

Final Design
Electrical Detail

DOCUMENT NOT CONSIDERED FINAL UNLESS ALL SIGNATURES COMPLETED

THIS ELECTRICAL DETAIL IS FOR
THE SIGNAL DESIGN: 12-1592
DESIGNED: MAY 2024
SEALED: 5/20/2024
REVISED: N/A

Stantec
Stantec Consulting Services Inc.
801 Jones Franklin Road-Suite 300
Raleigh, NC 27606
Tel. (919) 851-6866
Fax. (919) 851-7024
www.stantec.com
License No. F-0672

ELECTRICAL AND PROGRAMMING DETAILS FOR:

Prepared for the Offices of:
Transportation Mobility and Safety Division
STATE OF NORTH CAROLINA DEPARTMENT OF TRANSPORTATION
ITS & Signals Management Section
750 N. Greenfield Pkwy, Garner, NC 27529

NC 150 EB
at
MacLeod Drive

Division 12 Iredell County Mooresville

PLAN DATE:	May 2024	REVIEWED BY:	J Galloway, PE
PREPARED BY:	RMM/JPG	REVIEWED BY:	R Muncey, PE

REVISIONS	INIT.	DATE

SEAL 029904 NORTH CAROLINA PROFESSIONAL ENGINEER JASON P. GALLOWAY

DocuSigned by: Jason Galloway 5/20/2024
10D1E2B40B4B4BE... DATE
SIG. INVENTORY NO. 12-1592

11:35:24 AM
User:jgalloway

DocuSign Envelope ID: 240CC1EA-8AFD-4D42-8C82-B1465670BE8E

METAL POLE No. 1 AND 2

PROJECT REFERENCE NO.	SHEET NO.
R-2307B	Sig. 92.2

Design Loading for METAL POLE NO. 1

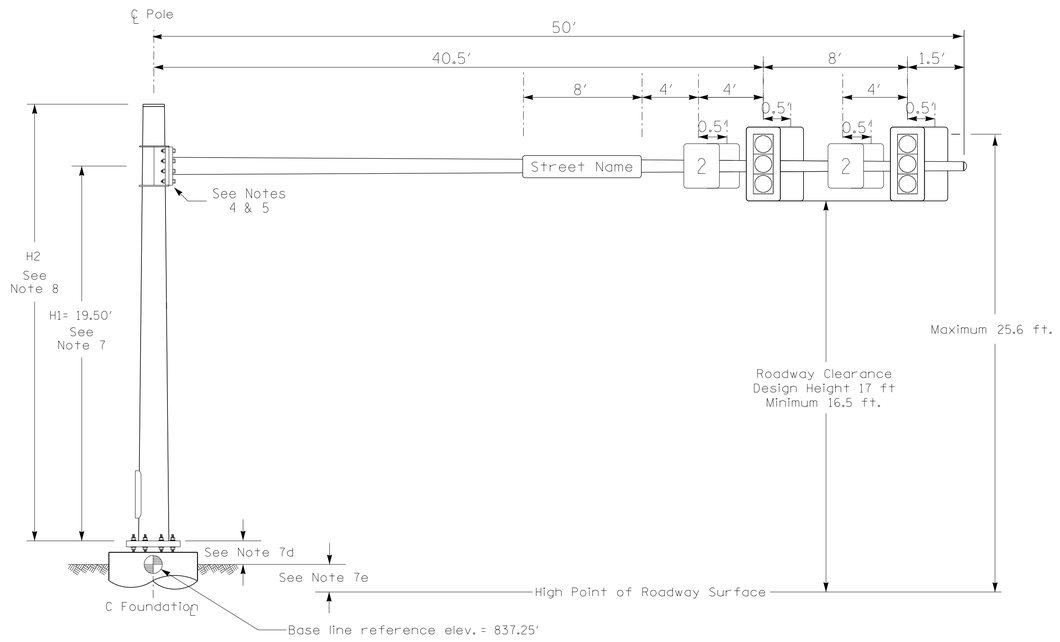

Elevation View

Design Loading for METAL POLE NO. 2

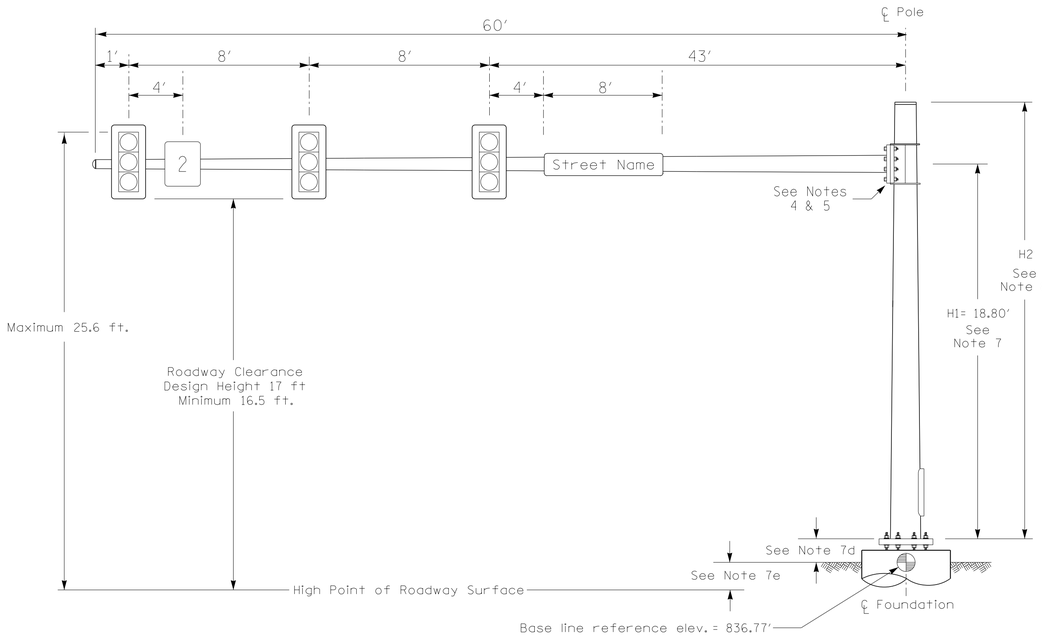

Elevation View

SPECIAL NOTE

The contractor is responsible for verifying that the mast arm attachment height (H1) will provide the "Design Height" clearance from the roadway before submitting final shop drawings for approval. Verify elevation data below which was obtained by field measurement or from available project survey data.

Elevation Data for Mast Arm Attachment (H1)

Elevation Differences for:	Pole 1	Pole 2
Baseline reference point at ℄ Foundation @ ground level	837.25 ft.	836.77 ft.
Elevation difference at High point of roadway surface	+0.42 ft.	-0.21 ft.
Elevation difference at Edge of travelway or face of curb	+/-0.0 ft.	+/-0.0 ft.

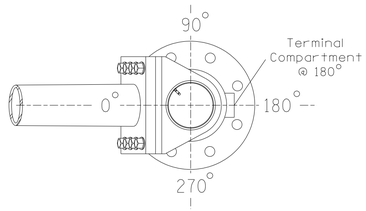

POLE RADIAL ORIENTATION

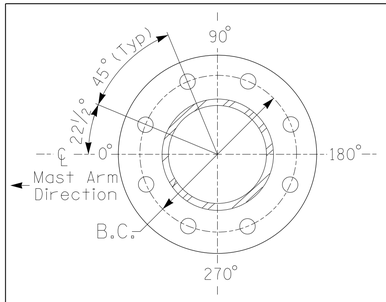

8 BOLT BASE PLATE DETAIL

See Note 6

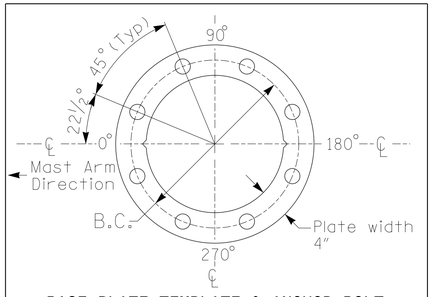

BASE PLATE TEMPLATE & ANCHOR BOLT LOCK PLATE DETAIL
For 8 Bolt Base Plate

MAST ARM LOADING SCHEDULE

LOADING SYMBOL	DESCRIPTION	AREA	SIZE	WEIGHT
	RIGID MOUNTED SIGNAL HEAD 12"-3 SECTION-WITH BACKPLATE	9.3 S.F.	25.5"W X 52.5"L	60 LBS
	PEDESTRIAN SIGNAL HEAD WITH MOUNTING HARDWARE	2.2 S.F.	18.5"W X 17.0"L	21 LBS
2	SIGN RIGID MOUNTED	7.5 S.F.	30.0"W X 36.0"L	14 LBS
Street Name	STREET NAME SIGN RIGID MOUNTED	16.0 S.F.	24.0"W X 96.0"L	36 LBS

NOTES

DESIGN REFERENCE MATERIAL

1. Design the traffic signal structure and foundation in accordance with:
   - The 1st Edition 2015 AASHTO LRFD "Standard Specifications for Structural Supports for Highway Signs, Luminaires, and Traffic Signals, including all of the latest interim revisions.
   - The 2024 NCDOT "Standard Specifications for Roads and Structures." The latest addenda to the specifications can be found in the traffic signal project special provisions.
   - The 2024 NCDOT Roadway Standard Drawings.
   - The traffic signal project plans and special provisions.
   - The NCDOT "Metal Pole Standards" located at the following NCDOT website: https://connect.ncdot.gov/resources/safety/Pages/ITS-Design-Resources.aspx

DESIGN REQUIREMENTS

2. Design the traffic signal structure using the loading conditions shown in the elevation views. These are anticipated worst case "design loads" and may not represent the actual loads that will be applied at the time of the installation. The contractor should refer to the traffic signal plans for the actual loads that will be applied at the time of the installation.
3. Design all signal supports using force ratios that do not exceed 0.9.
4. The camber design for the mast arm deflection should provide an appearance of a low pitched arch where the tip or the free end of the mast arm does not deflect below horizontal when fully loaded.
5. A clamp-type bolted mast arm-to-pole connection may be used instead of the welded ring stiffened box connection shown as long as the connection meets all of the design requirements.
6. Design base plate with 8 anchor bolt holes. Provide 2 inch x 60 inch anchor bolts.
7. The mast arm attachment height (H1) shown is based on the following design assumptions:
   a. Mast arm slope and deflection are not considered in determining the arm attachment height as they are assumed to offset each other.
   b. Signal heads are rigidly mounted and vertically centered on the mast arm.
   c. The roadway clearance height for design is as shown in the elevation views.
   d. The top of the pole base plate is 0.75 feet above the ground elevation.
   e. Refer to the Elevation Data Chart for the elevation differences between the proposed foundation ground level and the high point of the roadway.
8. The pole manufacturer will determine the total height (H2) of each pole using the greater of the following:
   - Mast arm attachment height (H1) plus 2 feet, or
   - H1 plus 1/2 of the total height of the mast arm attachment assembly plus 1 foot.
9. If pole location adjustments are required, the contractor must gain approval from the Engineer as this may affect the mast arm lengths and arm attachment heights. The contractor may contact the Signal Design Section Senior Structural Engineer for assistance at (919) 814-5000.
10. The contractor is responsible for verifying that the mast arm length shown will allow proper positioning of the signal heads over the roadway.
11. The contractor is responsible for providing soil penetration testing data (SPT) to the pole manufacturer so site specific foundations can be designed.

NCDOT Wind Zone 5 (110 mph)

Stantec

DOCUMENT NOT CONSIDERED FINAL UNLESS ALL SIGNATURES COMPLETED

Prepared for the Offices of:
Transportation Mobility and Safety Division
NORTH CAROLINA DEPARTMENT OF TRANSPORTATION
Signal Design Section

750 N.Greenfield Pkwy.,Garner,NC 27529

NC 150 WB
at
MacLeod Drive

Division 12 Iredell County Mooresville

PLAN DATE:	November 2023	REVIEWED BY:	J. Galloway, PE
PREPARED BY:	J. Hambright	REVIEWED BY:	R. Muncey, PE

SCALE: 0 N/A N/A

REVISIONS	INIT.	DATE

NORTH CAROLINA PROFESSIONAL SEAL 029904 ENGINEER JASON P. GALLOWAY

DocuSigned by: Jason Galloway 5/20/2024
10D1E2B40B4B46E...

SIG. INVENTORY NO. 12-1592

5/17/2024
11:36:20 AM
User: jgalloway
L:\Traffic Signals\Design\Metal Poles\Loading Diagrams\Loading Diagram_Single Mast Arm_12-1592.dgn

DocuSign Envelope ID: 240CC1EA-8AFD-4D42-8C82-B1465670BE8E

PROJECT REFERENCE NO.	SHEET NO.
R-2307B	Sig. 93.0

PHASING DIAGRAM

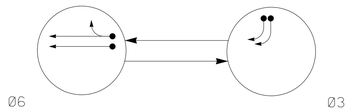

PHASING DIAGRAM DETECTION LEGEND

- DETECTED MOVEMENT
- UNDETECTED MOVEMENT (OVERLAP)
- UNSIGNALIZED MOVEMENT
- PEDESTRIAN MOVEMENT

TABLE OF OPERATION

SIGNAL FACE	PHASE Ø6	PHASE Ø3	PHASE FLASH
31,32	R	→	R
61	↑	R	R
62	G	R	R

SIGNAL FACE I.D.

All Heads L.E.D.

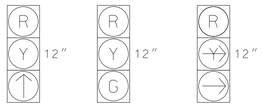

MAXTIME DETECTOR INSTALLATION CHART

DETECTOR					PROGRAMMING							
LOOP	SIZE (FT)	DISTANCE FROM STOPBAR (FT)	TURNS	NEW LOOP	CALL PHASE	DELAY TIME	EXTEND TIME	EXTEND	ADDED INITIAL	CALL	DELAY DURING GREEN	NEW CARD
3A	6X40	0	✳	✳	3	-	-	X	-	X	-	✳
3B	6X40	0	✳	✳	3	-	-	X	-	X	-	✳
6A	6X6	300	✳	✳	6	-	-	X	-	X	-	✳
6B	6X6	300	✳	✳	6	-	-	X	-	X	-	✳
6C	6X40	0	✳	✳	6	5.0	2.0	X	-	X	X	✳
6D	6X40	0	✳	✳	6	5.0	2.0	X	-	X	X	✳

✳ Video Detection Area
Camera locations should be confirmed in the field by the contractor in order to provide detection of the areas indicated.

2 Phase
Fully Actuated
NC 150 D12-02 MOORESVILLE
CLS

NOTES

1. Refer to "Roadway Standard Drawings NCDOT" dated January 2024 and "Standard Specifications for Roads and Structures" dated January 2024.
2. Do not program signal for late night flashing operation unless otherwise directed by the Engineer.
3. Reposition existing signal head number #62.
3. Set all detector units to presence mode.
4. Locate new cabinet so as not to obstruct sight distance of vehicles turning right on red.
5. The cabinet should be designed to include an Auxiliary Output File for future use.
6. Maximum times shown in timing chart are for free-run operation only. Coordinated signal system timing values supersede these values.
7. Temporary system communications will be maintained during construction using GPS units installed with new cabinets.

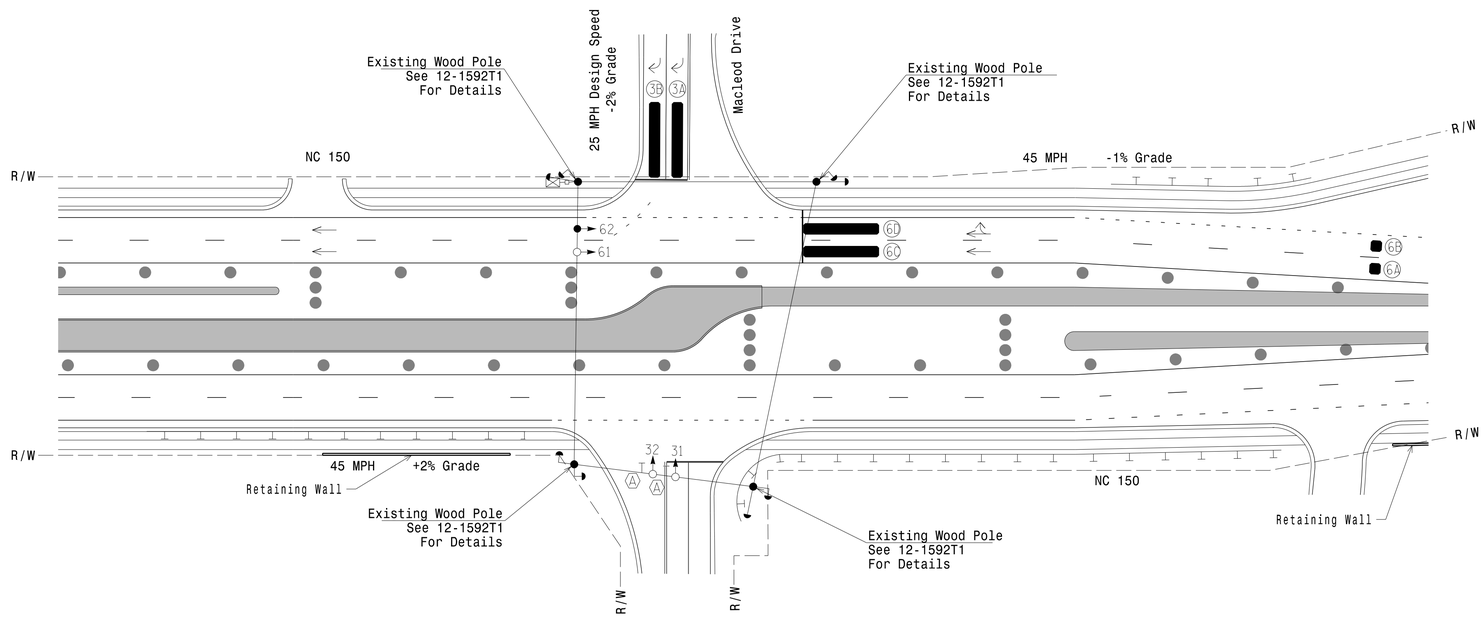

MAXTIME TIMING CHART

FEATURE	PHASE 3	PHASE 6
Walk *	–	–
Ped Clear *	–	–
Min Green	7	12
Passage *	2.0	6.0
Max 1 *	30	60
Yellow Change	3.3	4.6
Red Clear	1.7	1.8
Added Initial *	–	–
Maximum Initial *	–	–
Time Before Reduction *	–	15
Time To Reduce *	–	30
Minimum Gap	–	3.0
Advance Walk	–	–
Non Lock Detector	X	X
Vehicle Recall	–	MIN RECALL
Dual Entry	–	–

* These values may be field adjusted. Do not adjust Min Green and Extension times for phase 6 lower than what is shown. Min Green for all other phases should not be lower than 4 seconds.

LEGEND

PROPOSED		EXISTING
○→	Traffic Signal Head	●→
◐→	Modified Signal Head	N/A
⊣	Sign	⊣
□↓	Pedestrian Signal Head With Push Button & Sign	■↓
○→	Signal Pole with Guy	●→
○→	Signal Pole with Sidewalk Guy	●→
▭	Inductive Loop Detector	▭
⊠	Controller & Cabinet	⊠
□	Junction Box	■
----------	2-in Underground Conduit	----------
N/A	Right of Way	----------
→	Directional Arrow	→
▬	Video Detection Area	N/A
▭	Construction Zone	N/A
● ● ●	Drums	N/A
Ⓐ	"NO TURN ON RED" Sign (R10-11)	Ⓐ

New Installation
Temporary Design 1 - TMP Phase III

DOCUMENT NOT CONSIDERED FINAL UNLESS ALL SIGNATURES COMPLETED

Stantec
Stantec Consulting Services Inc.
801 Jones Franklin Road-Suite 300
Raleigh, NC 27606
Tel. (919) 851-6866
Fax. (919) 851-7024
www.stantec.com
License No. F-0672

Prepared for the Offices of:
Transportation Mobility and Safety Division
State of North Carolina
Department of Transportation
Signal Design Section
750 N.Greenfield Pkwy,Garner,NC 27529

NC 150 WB
at
MacLeod Drive

Division 12 Iredell County Mooresville

PLAN DATE:	May 2024	REVIEWED BY:	J Galloway, PE
PREPARED BY:	J Hambright	REVIEWED BY:	R Muncey, PE

SCALE: 0 40 1"=40'

REVISIONS	INIT.	DATE

SEAL
NORTH CAROLINA PROFESSIONAL
SEAL 029904
ENGINEER
JASON F. GALLOWAY

DocuSigned by: Jason Galloway 5/20/2024
10D1E2840B4B46E...
SIG. INVENTORY NO. I2-1853TI

$$$$$$$SYSDATE$$$$$$
11:37:42 AM
User:jgalloway
C:\Users\jgalloway\Documents\Design\Signal Design\Temporary Design\Phase 3 TEMP\R-2307B_sig_dsn_I2-1853TI.dgn

DocuSign Envelope ID: 240CC1EA-8AFD-4D42-8C82-B1465670BE8E

PROJECT REFERENCE NO.	SHEET NO.
R-2307B	Sig. 93.1

18 CHANNEL IP CONFLICT MONITOR PROGRAMMING DETAIL

(set switches as shown)

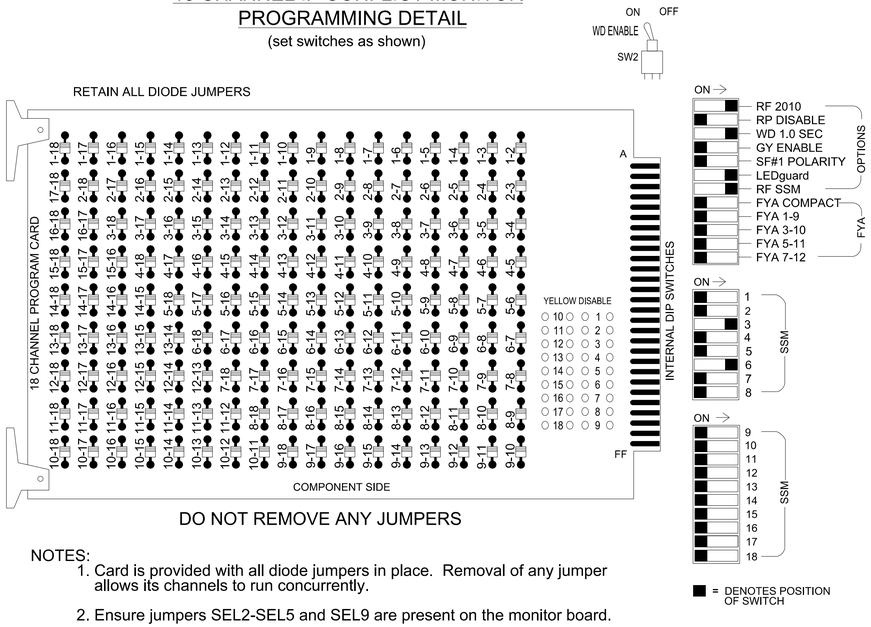

DO NOT REMOVE ANY JUMPERS

NOTES:

1. Card is provided with all diode jumpers in place. Removal of any jumper allows its channels to run concurrently.
2. Ensure jumpers SEL2-SEL5 and SEL9 are present on the monitor board.
3. Ensure that the Red Enable is active at all times during normal operation.
4. Integrate monitor with Ethernet network in cabinet.

■ = DENOTES POSITION OF SWITCH

NOTES

1. To prevent "flash-conflict" problems, insert red flash program blocks for all unused vehicle load switches in the output file. The installer shall verify that signal heads flash in accordance with the signal plan.
2. Program controller to start up in phase 2 Phase Not On and 6 Green No Walk.
3. If this signal will be managed by an ATMS software, enable controller and detector logging for all detectors used at this location.
4. The cabinet and controller are part of the NC 150 D12-02_Mooresville CLS.

EQUIPMENT INFORMATION

Controller.....2070LX
Cabinet.....332 w/ Aux
Software.....Q-Free MAXTIME
Cabinet Mount.....Base
Output File Positions.....18 With Aux. Output File
Load Switches Used.....S4, S8
Phases Used.....3, 6
Overlap "1".....NOT USED
Overlap "2".....NOT USED
Overlap "3".....NOT USED
Overlap "4".....NOT USED

SIGNAL HEAD HOOK-UP CHART

LOAD SWITCH NO.	S1	S2	S3	S4	S5	S6	S7	S8		S9	S10	S11	S12	AUX S1	AUX S2	AUX S3	AUX S4	AUX S5	AUX S6
CMU CHANNEL NO.	1	2	13	3	4	14	5	6		15	7	8	16	9	10	17	11	12	18
PHASE	1	2	2 PED	3	4	4 PED	5	6		6 PED	7	8	8 PED	OL1	OL2	SPARE	OL3	OL4	SPARE
SIGNAL HEAD NO.	NU	NU	NU	31,32	NU	NU	NU	61	62	NU	NU	NU	NU	NU	NU	NU	NU	NU	NU
RED				116				134	134										
YELLOW								135	135										
GREEN									136										
RED ARROW																			
YELLOW ARROW				117															
GREEN ARROW				118				136											

NU = Not Used

SEQUENCE DETAIL

Front Panel
Main Menu >Controller >Sequence & Phs Config>Sequences

Web Interface
Home >Controller >Sequence

Sequence 1

Ring	Sequence Data
1	6,a,3,b
2	

INPUT FILE POSITION LAYOUT

(front view)

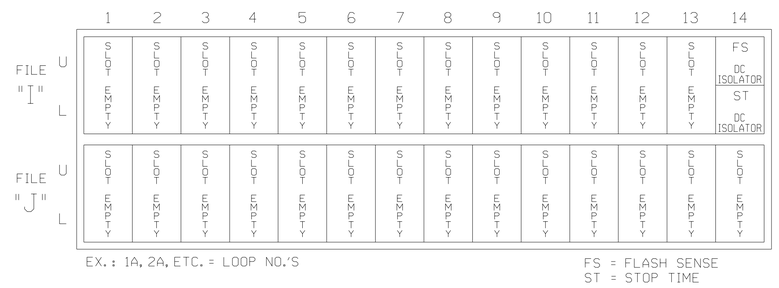

EX.: 1A, 2A, ETC. = LOOP NO.'S

FS = FLASH SENSE
ST = STOP TIME

SPECIAL DETECTOR NOTE

Install a video detection system for vehicle detection. Perform installation according to manufacturer's directions and NCDOT engineer-approved mounting locations to accomplish the detection schemes shown on the Signal Design Plans.

THIS ELECTRICAL DETAIL IS FOR THE SIGNAL DESIGN: 12-1853T1
DESIGNED: MAY 2024
SEALED: 5/20/2024
REVISED: N/A

Temporary Design 1 - TMP Phase III
Electrical Detail

DOCUMENT NOT CONSIDERED FINAL UNLESS ALL SIGNATURES COMPLETED

Stantec
Stantec Consulting Services Inc.
801 Jones Franklin Road-Suite 300
Raleigh, NC 27606
Tel. (919) 851-6866
Fax. (919) 851-7024
www.stantec.com
License No. F-0672

ELECTRICAL AND PROGRAMMING DETAILS FOR:

Prepared for the Offices of:
Transportation Mobility and Safety Division
STATE OF NORTH CAROLINA DEPARTMENT OF TRANSPORTATION
ITS & Signals Management Section
750 N. Greenfield Pkwy, Garner, NC 27529

NC 150 WB
at
MacLeod Drive

Division 12 Iredell County Mooresville

PLAN DATE: May 2024 REVIEWED BY: J Galloway, PE
PREPARED BY: D Waller, PE REVIEWED BY: R Muncey, PE

REVISIONS	INIT.	DATE

SEAL 029904 NORTH CAROLINA PROFESSIONAL ENGINEER JASON P. GALLOWAY

DocuSigned by: Jason Galloway 5/20/2024
10D1E2B40B4B4BE... DATE

STD. INVENTORY NO. 12-1853T1

11:37:51 AM
User:jgalloway

DocuSign Envelope ID: 240CC1EA-8AFD-4D42-8C82-B1465670BE8E

PROJECT REFERENCE NO.	SHEET NO.
R-2307B	Sig. 94.0

PHASING DIAGRAM

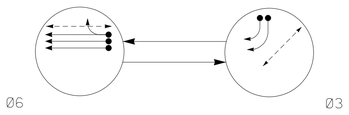

PHASING DIAGRAM DETECTION LEGEND

- DETECTED MOVEMENT
- UNDETECTED MOVEMENT (OVERLAP)
- UNSIGNALIZED MOVEMENT
- PEDESTRIAN MOVEMENT

TABLE OF OPERATION			
SIGNAL FACE	PHASE Ø6	PHASE Ø3	PHASE FLASH
31,32	R	→	R
61,62,63	G	R	R
P31,P32	DW	W	DRK
P61, P62	W	DW	DRK

SIGNAL FACE I.D.

All Heads L.E.D.

MAXTIME DETECTOR INSTALLATION CHART												
DETECTOR					PROGRAMMING							
LOOP	SIZE (FT)	DISTANCE FROM STOPBAR (FT)	TURNS	NEW LOOP	CALL PHASE	DELAY TIME	EXTEND TIME	EXTEND	ADDED INITIAL	CALL	DELAY DURING GREEN	NEW CARD
3A	6X40	0	2-4-2	X	3	-	-	X	-	X	-	X
3B	6X40	0	2-4-2	X	3	-	-	X	-	X	-	X
6A	6X6	300	5	X	6	-	-	X	X	X	-	X
6B	6X6	300	5	X	6	-	-	X	X	X	-	X
6C	6X6	300	5	X	6	-	-	X	X	X	-	X

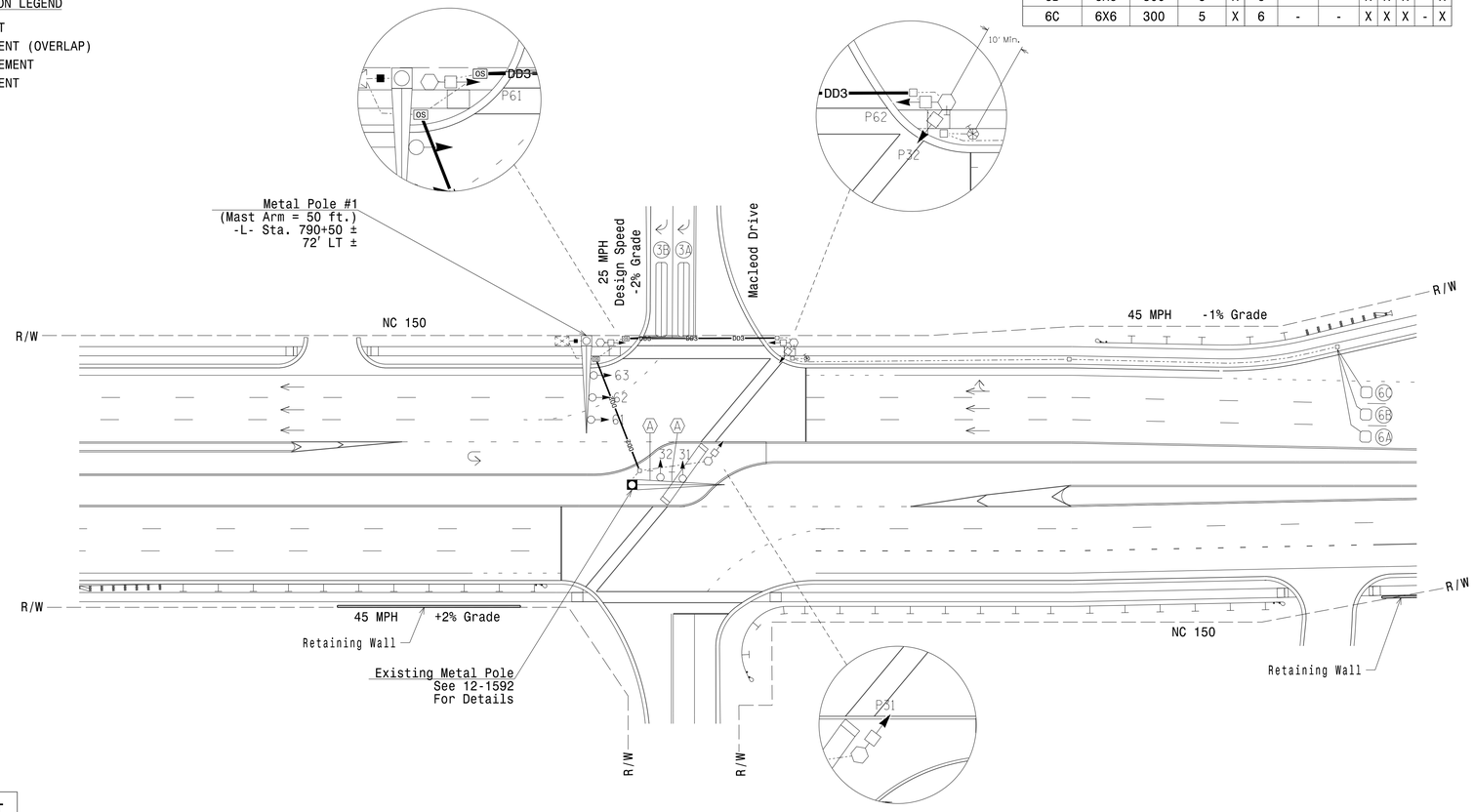

NOTES

1. Refer to "Roadway Standard Drawings NCDOT" dated January 2024 and "Standard Specifications for Roads and Structures" dated January 2024.
2. Do not program signal for late night flashing operation unless otherwise directed by the Engineer.
3. Set all detector units to presence mode.
4. Omit "WALK" and flashing "DON'T WALK" with no pedestrian calls.
5. Program pedestrian heads to countdown the flashing "Don't Walk" time only.
6. Maximum times shown in timing chart are for free-run operation only. Coordinated signal system timing values supersede these values.
7. Pedestrian pedestals are conceptual and shown for reference only. See 2024 NCDOT Roadway Standard Drawings for push button location details.

2 Phase
Fully Actuated
NC 150 D12-02_MOORESVILLE
CLS

MAXTIME TIMING CHART

FEATURE	PHASE 3	PHASE 6
Walk *	4	14
Ped Clear *	14	19
Min Green	7	12
Passage *	2.0	6.0
Max 1 *	30	60
Yellow Change	3.3	4.6
Red Clear	1.7	1.6
Added Initial *	–	1.0
Maximum Initial *	–	34
Time Before Reduction *	–	15
Time To Reduce *	–	30
Minimum Gap	–	3.0
Advance Walk	–	7
Non Lock Detector	X	–
Vehicle Recall	–	MIN RECALL
Dual Entry	–	–

* These values may be field adjusted. Do not adjust Min Green and Extension times for phase 6 lower than what is shown. Min Green for all other phases should not be lower than 4 seconds.

LEGEND

PROPOSED		EXISTING
	Traffic Signal Head	
	Modified Signal Head	N/A
	Sign	
	Pedestrian Signal Head With Push Button & Sign	
	Signal Pole with Guy	
	Signal Pole with Sidewalk Guy	
	Inductive Loop Detector	
	Controller & Cabinet	
	Junction Box	
	2-in Underground Conduit	
N/A	Right of Way	
	Directional Arrow	
	Metal Pole with Mastarm	
—DD#—	Directional Drill (#) x 2" Conduit	N/A
	Type II Signal Pedestal	
OS	Oversized Junction Box	
A	"NO TURN ON RED" Sign (R10-11)	A

New Installation - Final Design

DOCUMENT NOT CONSIDERED FINAL UNLESS ALL SIGNATURES COMPLETED

Stantec
Stantec Consulting Services Inc.
801 Jones Franklin Road-Suite 300
Raleigh, NC 27606
Tel. (919) 851-6866
Fax. (919) 851-7024
www.stantec.com
License No. F-0672

Prepared for the Offices of:
Transportation Mobility and Safety Division
State of North Carolina Department of Transportation
Signal Design Section
750 N.Greenfield Pkwy.Garner,NC 27529

NC 150 WB
at
MacLeod Drive

Division 12 Iredell County Mooresville

PLAN DATE: May 2024 REVIEWED BY: J Galloway, PE
PREPARED BY: J Hambright REVIEWED BY: R Muncey, PE

SCALE 0 40 1"=40'

REVISIONS	INIT.	DATE

SEAL
NORTH CAROLINA
PROFESSIONAL
SEAL
029904
ENGINEER
JASON P. GALLOWAY

DocuSigned by: Jason Galloway 5/20/2024
10D1E2B40B4B4EE... DATE

SIG. INVENTORY NO. 12-1853

$$$$$$SYSDATE$$$$$
11:38:35 AM
H:\Traffic\Signals\Designs\Signal Design\Final Design\R-2307B_sig_dsn_12-1853.dgn
User:jgalloway

DocuSign Envelope ID: 240CC1EA-8AFD-4D42-8C82-B1465670BE8E

PROJECT REFERENCE NO.	SHEET NO.
R-2307B	Sig. 94.1

18 CHANNEL IP CONFLICT MONITOR PROGRAMMING DETAIL

(remove jumpers and set switches as shown)

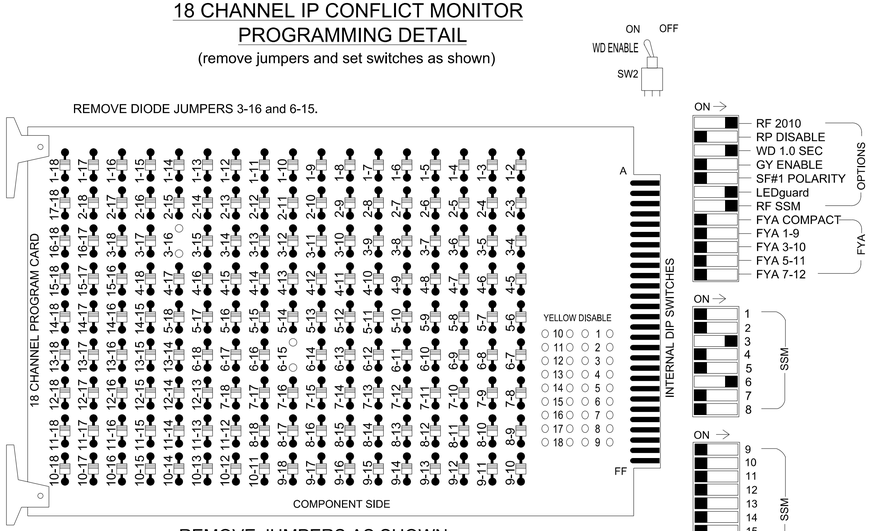

REMOVE JUMPERS AS SHOWN

NOTES:

1. Card is provided with all diode jumpers in place. Removal of any jumper allows its channels to run concurrently.
2. Ensure jumpers SEL2-SEL5 and SEL9 are present on the monitor board.
3. Ensure that the Red Enable is active at all times during normal operation.
4. Integrate monitor with Ethernet network in cabinet.

NOTES

1. To prevent "flash-conflict" problems, insert red flash program blocks for all unused vehicle load switches in the output file. The installer shall verify that signal heads flash in accordance with the signal plan.
2. Program controller to start up in phase 2 Phase Not On and 6 Green No Walk.
3. If this signal will be managed by an ATMS software, enable controller and detector logging for all detectors used at this location.
4. The cabinet and controller are part of the NC 150 D12-02_Mooresville CLS.

SIGNAL HEAD HOOK-UP CHART

LOAD SWITCH NO.	S1	S2	S3	S4	S5	S6	S7	S8	S9	S10	S11	S12	AUX S1	AUX S2	AUX S3	AUX S4	AUX S5	AUX S6
CMU CHANNEL NO.	1	2	13	3	4	14	5	6	15	7	8	16	9	10	17	11	12	18
PHASE	1	2	2 PED	3	4	4 PED	5	6	6 PED	7	8	3 PED	OL1	OL2	SPARE	OL3	OL4	SPARE
SIGNAL HEAD NO.	NU	NU	NU	31,32	NU	NU	NU	61,62 63	P61, P62	NU	NU	P31, P32	NU	NU	NU	NU	NU	NU
RED				116				134										
YELLOW								135										
GREEN								136										
RED ARROW																		
YELLOW ARROW				117														
GREEN ARROW				118														
✋									119			110						
🚶									121			112						

NU = Not Used

EQUIPMENT INFORMATION

Controller.....2070LX
Cabinet.....332 w/ Aux
Software.....Q-Free MAXTIME
Cabinet Mount.....Base
Output File Positions.....18 With Aux. Output File
Load Switches Used.....S4, S8, S9, S12
Phases Used.....3, 3PED, 6, 6PED
Overlap "1".....NOT USED
Overlap "2".....NOT USED
Overlap "3".....NOT USED
Overlap "4".....NOT USED

COUNTDOWN PEDESTRIAN SIGNAL OPERATION

Countdown Ped Signals are required to display timing only during Ped Clearance Interval. Consult Ped Signal Module user's manual for instructions on selecting this feature.

INPUT FILE POSITION LAYOUT

(front view)

		1	2	3	4	5	6	7	8	9	10	11	12	13	14
FILE "I"	U	SLOT EMPTY	SLOT EMPTY	SLOT EMPTY	SLOT EMPTY	∅ 3 3A	∅ 3 3B	SLOT EMPTY	SLOT EMPTY	SLOT EMPTY	SLOT EMPTY	SLOT EMPTY	SLOT EMPTY	∅ 6 PED DC ISOLATOR	FS DC ISOLATOR
	L					NOT USED	NOT USED							∅ 3 PED DC ISOLATOR	ST DC ISOLATOR
FILE "J"	U	SLOT EMPTY	∅ 6 6A	∅ 6 6C	SLOT EMPTY	SLOT EMPTY	SLOT EMPTY	SLOT EMPTY	SLOT EMPTY	SLOT EMPTY	SLOT EMPTY	SLOT EMPTY	SLOT EMPTY	SLOT EMPTY	SLOT EMPTY
	L		∅ 6 6B	NOT USED											

EX. : 1A, 2A, ETC. = LOOP NO.'S

FS = FLASH SENSE
ST = STOP TIME

INPUT FILE CONNECTION & PROGRAMMING CHART

LOOP NO.	LOOP TERMINAL	INPUT FILE POS.	PIN NO.	INPUT POINT	DETECTOR NO.	CALL PHASE	DELAY TIME	EXTEND TIME	EXTEND	ADDED INITIAL	CALL	DELAY DURING GREEN
3A	TB4-5,6	I5U	58	20	7	3			X		X	
3B	TB4-9,10	I6U	41	3	8	3			X		X	
6A	TB3-5,6	J2U	40	2	16	6			X	X	X	
6B	TB3-7,8	J2L	44	6	17	6			X	X	X	
6C	TB3-9,10	J3U	64	30	18	6			X	X	X	
PED PUSH BUTTONS												
P61,P62	TB8-7,9	I13U	68	34	6	PED 6						
P31,P32	TB8-8,9	I13L	70	36	8	PED 3						

NOTE:
INSTALL DC ISOLATORS IN INPUT FILE SLOT I13.

INPUT FILE POSITION LEGEND: J2L
FILE J
SLOT 2
LOWER

PED 3 PROGRAMMING DETAIL

Front Panel
Main Menu >Controller >Detector >Ped Det Plans

Web Interface
Home >Controller >Detector Configuration >Pedestrian Detector

Plan 1

Detector	Descripton	Call Phase	Call Overlap
2		2	0
4		4	0
6		6	0
8		3	0

NOTICE PHASE 3 PED ASSIGNED TO DETECTOR 8 PED →

SEQUENCE DETAIL

Front Panel
Main Menu >Controller >Sequence & Phs Config>Sequences

Web Interface
Home >Controller >Sequence

Sequence 1

Ring	Sequence Data
1	6,a,3,b
2	

THIS ELECTRICAL DETAIL IS FOR THE SIGNAL DESIGN: 12-1853
DESIGNED: MAY 2024
SEALED: 5/20/2024
REVISED: N/A

Front Panel
Main Menu >Controller >More>Channels>Channels Config

Web Interface
Home >Controller >Advanced IO>Channels>Channels Configuration

Channel Configuration

Channel	Control Type	Control Source	Flash Yellow	Flash Red	Flash Alt	MMU Channel
1	Phase Vehicle	1		X	X	1
2	Phase Vehicle	2		X		2
3	Phase Vehicle	3		X	X	3
4	Phase Vehicle	4		X		4
5	Phase Vehicle	5		X		5
6	Phase Vehicle	6		X	X	6
7	Phase Vehicle	7		X		7
8	Phase Vehicle	8		X	X	8
9	Overlap	1		X	X	9
10	Overlap	2		X	X	10
11	Overlap	3		X		11
12	Overlap	4		X		12
13	Phase Ped	2				13
14	Phase Ped	4				14
15	Phase Ped	6				15
16	Phase Ped	3				16
17	Overlap	5		X	X	17
18	Overlap	6		X		18

NOTICE PHASE 3 PED ASSIGNED TO CHANNEL 16 →

Electrical Detail - Final Design

DOCUMENT NOT CONSIDERED FINAL UNLESS ALL SIGNATURES COMPLETED

Stantec
Stantec Consulting Services Inc.
801 Jones Franklin Road-Suite 300
Raleigh, NC 27606
Tel. (919) 851-6866
Fax. (919) 851-7024
www.stantec.com
License No. F-0672

ELECTRICAL AND PROGRAMMING DETAILS FOR:

Prepared for the Offices of:
Transportation Mobility and Safety Division
STATE OF NORTH CAROLINA DEPARTMENT OF TRANSPORTATION
ITS & Signals Management Section
750 N. Greenfield Pkwy, Garner, NC 27529

NC 150 WB
at
MacLeod Drive

Division 12 Iredell County Mooresville

PLAN DATE: May 2024 REVIEWED BY: J Galloway, PE
PREPARED BY: D Waller, PE REVIEWED BY: R Muncey, PE

REVISIONS	INIT.	DATE

SEAL 029904 NORTH CAROLINA PROFESSIONAL ENGINEER JASON P. GALLOWAY

DocuSigned by: Jason Galloway 5/20/2024
10D1E2B40B4B4BE... DATE

STD. INVENTORY NO. 12-1853

11:39:30 AM
User:jgalloway
Design:MAXTIME#R-2307B_sm_ele_12-1853.dgn
Design:Electrical Details#Final Design

DocuSign Envelope ID: 240CC1EA-8AFD-4D42-8C82-B1465670BE8E

Design Loading for METAL POLE NO. 1

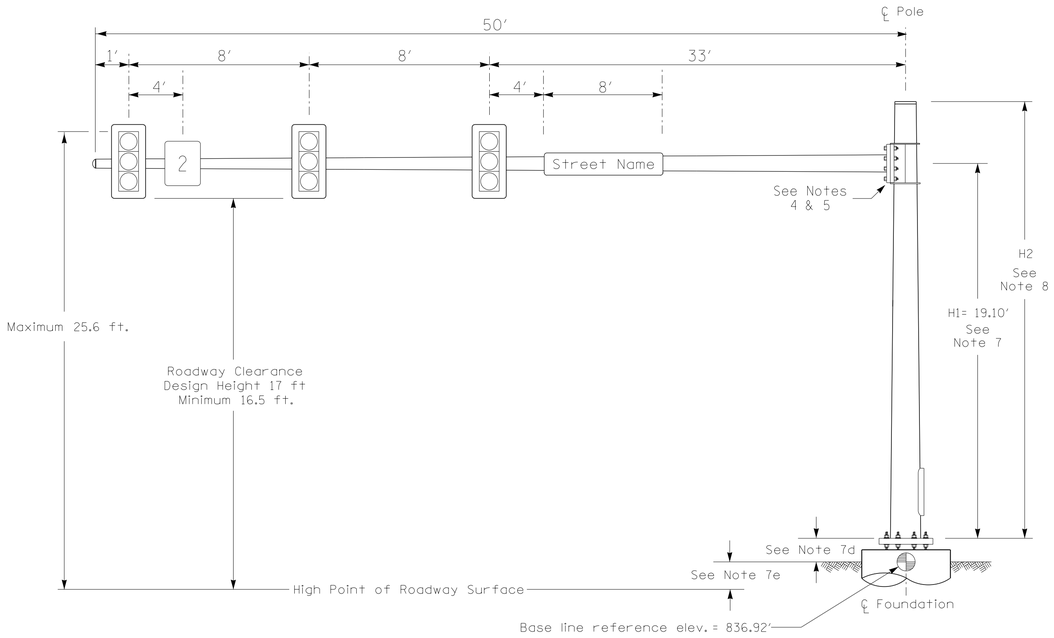

Elevation View

SPECIAL NOTE

The contractor is responsible for verifying that the mast arm attachment height (H1) will provide the "Design Height" clearance from the roadway before submitting final shop drawings for approval. Verify elevation data below which was obtained by field measurement or from available project survey data.

Elevation Data for Mast Arm Attachment (H1)

Elevation Differences for:	Pole 1	
Baseline reference point at ℄ Foundation @ ground level	836.92 ft.	
Elevation difference at High point of roadway surface	+0.03 ft.	
Elevation difference at Edge of travelway or face of curb	+/-0.0 ft.	

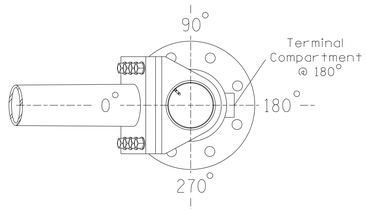

POLE RADIAL ORIENTATION

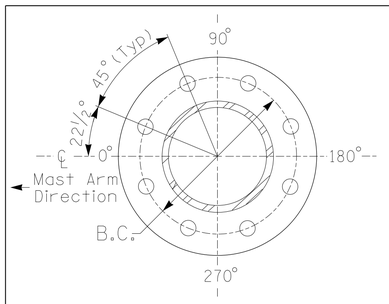

8 BOLT BASE PLATE DETAIL

See Note 6

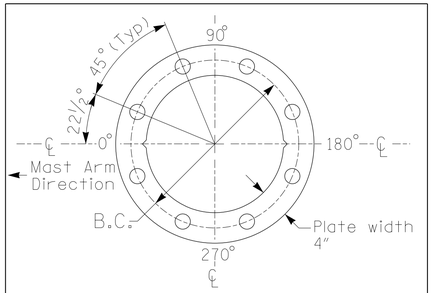

BASE PLATE TEMPLATE & ANCHOR BOLT LOCK PLATE DETAIL
For 8 Bolt Base Plate

METAL POLE No. 1

PROJECT REFERENCE NO.	SHEET NO.
R-2307B	Sig. 94.2

MAST ARM LOADING SCHEDULE

LOADING SYMBOL	DESCRIPTION	AREA	SIZE	WEIGHT
	RIGID MOUNTED SIGNAL HEAD 12″-3 SECTION-WITH BACKPLATE	9.3 S.F.	25.5″W X 52.5″L	60 LBS
2	SIGN RIGID MOUNTED	7.5 S.F.	30.0″W X 36.0″L	14 LBS
Street Name	STREET NAME SIGN RIGID MOUNTED	16.0 S.F.	24.0″W X 96.0″L	36 LBS

NOTES

DESIGN REFERENCE MATERIAL

1. Design the traffic signal structure and foundation in accordance with:
   - The 1st Edition 2015 AASHTO LRFD "Standard Specifications for Structural Supports for Highway Signs, Luminaires, and Traffic Signals, including all of the latest interim revisions.
   - The 2024 NCDOT "Standard Specifications for Roads and Structures." The latest addenda to the specifications can be found in the traffic signal project special provisions.
   - The 2024 NCDOT Roadway Standard Drawings.
   - The traffic signal project plans and special provisions.
   - The NCDOT "Metal Pole Standards" located at the following NCDOT website: https://connect.ncdot.gov/resources/safety/Pages/ITS-Design-Resources.aspx

DESIGN REQUIREMENTS

2. Design the traffic signal structure using the loading conditions shown in the elevation views. These are anticipated worst case "design loads" and may not represent the actual loads that will be applied at the time of the installation. The contractor should refer to the traffic signal plans for the actual loads that will be applied at the time of the installation.
3. Design all signal supports using force ratios that do not exceed 0.9.
4. The camber design for the mast arm deflection should provide an appearance of a low pitched arch where the tip or the free end of the mast arm does not deflect below horizontal when fully loaded.
5. A clamp-type bolted mast arm-to-pole connection may be used instead of the welded ring stiffened box connection shown as long as the connection meets all of the design requirements.
6. Design base plate with 8 anchor bolt holes. Provide 2 inch x 60 inch anchor bolts.
7. The mast arm attachment height (H1) shown is based on the following design assumptions:
   a. Mast arm slope and deflection are not considered in determining the arm attachment height as they are assumed to offset each other.
   b. Signal heads are rigidly mounted and vertically centered on the mast arm.
   c. The roadway clearance height for design is as shown in the elevation views.
   d. The top of the pole base plate is 0.75 feet above the ground elevation.
   e. Refer to the Elevation Data Chart for the elevation differences between the proposed foundation ground level and the high point of the roadway.
8. The pole manufacturer will determine the total height (H2) of each pole using the greater of the following:
   - Mast arm attachment height (H1) plus 2 feet, or
   - H1 plus 1/2 of the total height of the mast arm attachment assembly plus 1 foot.
9. If pole location adjustments are required, the contractor must gain approval from the Engineer as this may affect the mast arm lengths and arm attachment heights. The contractor may contact the Signal Design Section Senior Structural Engineer for assistance at (919) 814-5000.
10. The contractor is responsible for verifying that the mast arm length shown will allow proper positioning of the signal heads over the roadway.
11. The contractor is responsible for providing soil penetration testing data (SPT) to the pole manufacturer so site specific foundations can be designed.

NCDOT Wind Zone 5 (110 mph)

Stantec

DOCUMENT NOT CONSIDERED FINAL UNLESS ALL SIGNATURES COMPLETED

Prepared for the Offices of:
Transportation Mobility and Safety Division
NORTH CAROLINA DEPARTMENT OF TRANSPORTATION
Signal Design Section

750 N.Greenfield Pkwy.Garner,NC 27529

NC 150 WB
at
MacLeod Drive

Division 12 Iredell County Mooresville

PLAN DATE: November 2023 REVIEWED BY: J. Galloway, PE
PREPARED BY: J. Hambright REVIEWED BY: R. Muncey, PE

SCALE 0 N/A N/A

REVISIONS	INIT.	DATE

NORTH CAROLINA PROFESSIONAL SEAL 029904 ENGINEER JASON P. GALLOWAY

DocuSigned by: Jason Galloway 5/20/2024
10D1E2840B4B46E...
SIGNATURE DATE

SIG. INVENTORY NO. 12-1853

5/17/2024
11:40:19 AM
User:jgalloway
C:\Users\jgalloway\Desktop\Designs\Design\Metal Poles\Loading Diagrams\Loading Diagram_Single Mast Arm_12-1853.dgn

DocuSign Envelope ID: 240CC1EA-8AFD-4D42-8C82-B1465670BE8E

PROJECT REFERENCE NO.	SHEET NO.
R-2307B	Sig. 95.0

3 Phase
Fully Actuated
NC 150 D12-02_MOORESVILLE
CLS

PHASING DIAGRAM

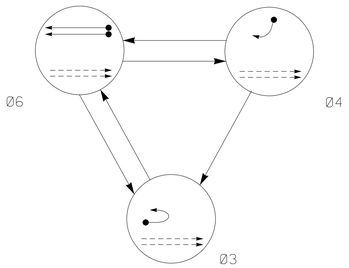

PHASING DIAGRAM DETECTION LEGEND

- DETECTED MOVEMENT
- UNDETECTED MOVEMENT (OVERLAP)
- UNSIGNALIZED MOVEMENT
- PEDESTRIAN MOVEMENT

TABLE OF OPERATION

SIGNAL FACE	PHASE Ø6	PHASE Ø4	PHASE Ø3	PHASE FLASH
31,32	(R)	(R)		(R)
41, 42	R		R	R
61		R	R	R
62	G	R	R	R

SIGNAL FACE I.D.

All Heads L.E.D.

Denotes Louvers

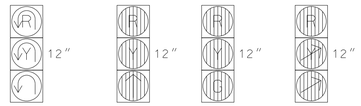

MAXTIME DETECTOR INSTALLATION CHART

DETECTOR					PROGRAMMING							
LOOP	SIZE (FT)	DISTANCE FROM STOPBAR (FT)	TURNS	NEW LOOP	CALL PHASE	DELAY TIME	EXTEND TIME	EXTEND	ADDED INITIAL	CALL	DELAY DURING GREEN	NEW CARD
3A	6X40	0	✳	✳	3	-	-	X	-	X	-	✳
4A	6X40	0	✳	✳	4	-	-	X	-	X	-	✳
6A	6X6	300	✳	✳	6	-	-	X	-	X	-	✳
6B	6X6	300	✳	✳	6	-	-	X	-	X	-	✳
6C	6X40	0	✳	✳	6	5.0	2.0	X	-	X	X	✳
6D	6X40	0	✳	✳	6	5.0	2.0	X	-	X	X	✳

✳ Video Detection Area
Camera locations should be confirmed in the field by the contractor in order to provide detection of the areas indicated.

NOTES

1. Refer to "Roadway Standard Drawings NCDOT" dated January 2024 and "Standard Specifications for Roads and Structures" dated January 2024.
2. Do not program signal for late night flashing operation unless otherwise directed by the Engineer.
3. The order of phase 3 and phase 4 may be reversed.
4. Set all detector units to presence mode.
5. Locate new cabinet so as not to obstruct sight distance of vehicles turning right on red.
6. The cabinet should be designed to include an Auxillary Output File for future use.
7. Maximum times shown in timing chart are for free-run operation only. Coordinated signal system timing values supersede these values.
8. Field adjust temporary poles as needed.
9. Tether all signal heads.

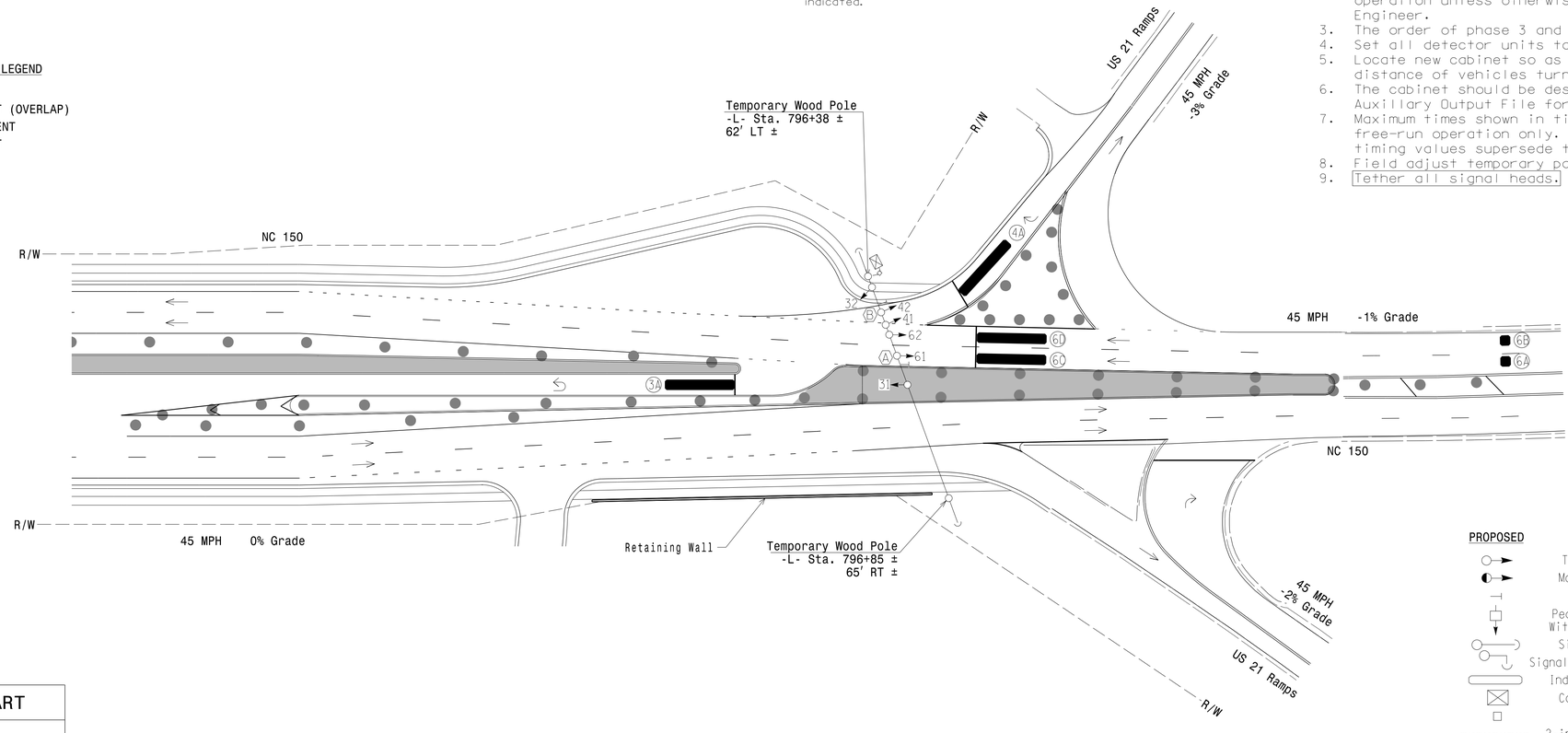

LEGEND

PROPOSED		EXISTING
	Traffic Signal Head	
	Modified Signal Head	N/A
	Sign	
	Pedestrian Signal Head With Push Button & Sign	
	Signal Pole with Guy	
	Signal Pole with Sidewalk Guy	
	Inductive Loop Detector	
	Controller & Cabinet	
	Junction Box	
	2-in Underground Conduit	
N/A	Right of Way	
	Directional Arrow	
	Video Detection Area	N/A
	Construction Zone	N/A
	Drums	N/A
(A)	No Left Turn Sign (R3-2)	(A)
(B)	"NO TURN ON RED" Sign (R10-11)	(B)

MAXTIME TIMING CHART

FEATURE	PHASE 3	PHASE 4	PHASE 6
Walk *	–	–	–
Ped Clear *	–	–	–
Min Green	7	7	12
Passage *	2.0	2.0	6.0
Max 1 *	30	20	60
Yellow Change	3.0	3.7	4.6
Red Clear	3.3	3.0	2.1
Added Initial *	–	–	–
Maximum Initial *	–	–	–
Time Before Reduction *	–	–	15
Time To Reduce *	–	–	30
Minimum Gap	–	–	3.0
Advance Walk	–	–	–
Non Lock Detector	X	X	–
Vehicle Recall	–	–	MIN RECALL
Dual Entry	–	–	–

* These values may be field adjusted. Do not adjust Min Green and Extension times for phase 6 lower than what is shown. Min Green for all other phases should not be lower than 4 seconds.

New Installation
Temporary Design 1 - TMP Phase III

DOCUMENT NOT CONSIDERED FINAL UNLESS ALL SIGNATURES COMPLETED

Stantec
Stantec Consulting Services Inc.
801 Jones Franklin Road-Suite 300
Raleigh, NC 27606
Tel. (919) 851-6866
Fax. (919) 851-7024
www.stantec.com
License No. F-0672

Prepared for the Offices of:
Transportation Mobility and Safety Division
NORTH CAROLINA DEPARTMENT OF TRANSPORTATION
Signal Design Section
750 N.Greenfield Pkwy,Garner,NC 27529

NC 150 WB at MacLeod Drive U-Turn

Division 12 Iredell County Mooresville

PLAN DATE: May 2024 REVIEWED BY: J Galloway, PE

PREPARED BY: J Hambright REVIEWED BY: R Muncey, PE

REVISIONS	INIT.	DATE

SCALE 0 40 1"=40'

SEAL NORTH CAROLINA PROFESSIONAL SEAL 029904 ENGINEER JASON P. GALLOWAY

DocuSigned by: Jason Galloway 5/20/2024
10D1E2B40B4B4EE DATE
SIG. INVENTORY NO. 12-18491I

$$$$$$$SYSDATE$$$$$
11:41:17 AM
I:\Traffic\Signals\Design\Signal Design\Temporary Design\Phase 3 TEMP\R-2307B_sig_dsn_12-18491I.dgn
User:jgilloway

DocuSign Envelope ID: 240CC1EA-8AFD-4D42-8C82-B1465670BE8E

18 CHANNEL IP CONFLICT MONITOR PROGRAMMING DETAIL

(set switches as shown)

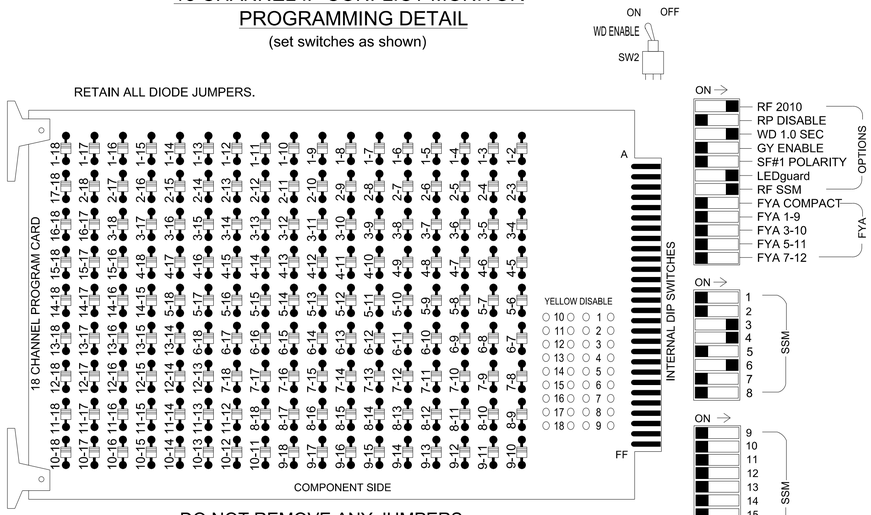

DO NOT REMOVE ANY JUMPERS

NOTES:

1. Card is provided with all diode jumpers in place. Removal of any jumper allows its channels to run concurrently.
2. Ensure jumpers SEL2-SEL5 and SEL9 are present on the monitor board.
3. Ensure that the Red Enable is active at all times during normal operation.
4. Integrate monitor with Ethernet network in cabinet.

NOTES

1. To prevent "flash-conflict" problems, insert red flash program blocks for all unused vehicle load switches in the output file. The installer shall verify that signal heads flash in accordance with the signal plan.
2. Program controller to start up in phase 2 Phase Not On and 6 Green No Walk.
3. If this signal will be managed by an ATMS software, enable controller and detector logging for all detectors used at this location.
4. The cabinet and controller are part of the NC 150 D12-02_Mooresville CLS.

EQUIPMENT INFORMATION

Controller.....2070LX
Cabinet.....332 w/ Aux
Software.....Q-Free MAXTIME
Cabinet Mount.....Base
Output File Positions.....18 With Aux. Output File
Load Switches Used.....S4, S5, S8
Phases Used.....3, 4, 6
Overlap "1".....NOT USED
Overlap "2".....NOT USED
Overlap "3".....NOT USED
Overlap "4".....NOT USED

PROJECT REFERENCE NO.	SHEET NO.
R-2307B	Sig. 95.1

SIGNAL HEAD HOOK-UP CHART

LOAD SWITCH NO.	S1	S2	S3	S4	S5	S6	S7	S8		S9	S10	S11	S12	AUX S1	AUX S2	AUX S3	AUX S4	AUX S5	AUX S6
CMU CHANNEL NO.	1	2	13	3	4	14	5	6		15	7	8	16	9	10	17	11	12	18
PHASE	1	2	2 PED	3	4	4 PED	5	6		6 PED	7	8	8 PED	OL1	OL2	SPARE	OL3	OL4	SPARE
SIGNAL HEAD NO.	NU	NU	NU	31,32	41,42	NU	NU	61	62	NU	NU	NU	NU	NU	NU	NU	NU	NU	NU
RED					101			134	134										
YELLOW								135	135										
GREEN									136										
RED ARROW				116															
YELLOW ARROW				117	102														
GREEN ARROW				118	103			136											

NU = Not Used

SEQUENCE DETAIL

Front Panel
Main Menu >Controller >Sequence & Phs Config>Sequences

Web Interface
Home >Controller >Sequence

Sequence 1

Ring	Sequence Data
1	6,a,3,4,b
2	

INPUT FILE POSITION LAYOUT

(front view)

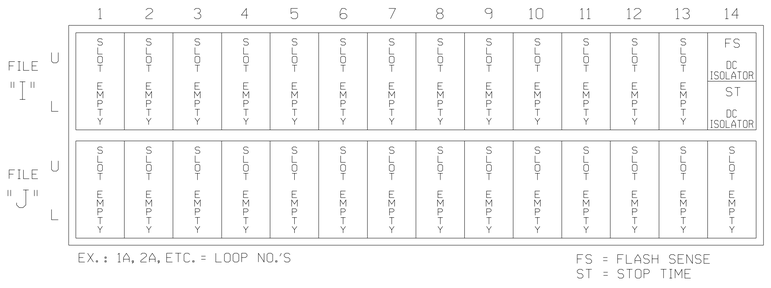

SPECIAL DETECTOR NOTE

Install a video detection system for vehicle detection. Perform installation according to manufacturer's directions and NCDOT engineer-approved mounting locations to accomplish the detection schemes shown on the Signal Design Plans.

THIS ELECTRICAL DETAIL IS FOR
THE SIGNAL DESIGN: 12-1849T1
DESIGNED: MAY 2024
SEALED: 5/20/2024
REVISED: N/A

Temporary Design 1 - TMP Phase III
Electrical Detail

DOCUMENT NOT CONSIDERED FINAL UNLESS ALL SIGNATURES COMPLETED

Stantec
Stantec Consulting Services Inc.
801 Jones Franklin Road-Suite 300
Raleigh, NC 27606
Tel. (919) 851-6866
Fax. (919) 851-7024
www.stantec.com
License No. F-0672

ELECTRICAL AND PROGRAMMING DETAILS FOR:

Prepared for the Offices of:
Transportation Mobility and Safety Division
STATE OF NORTH CAROLINA DEPARTMENT OF TRANSPORTATION
ITS & Signals Management Section
750 N. Greenfield Pkwy, Garner, NC 27529

NC 150 WB
at
MacLeod Drive U-Turn

Division 12 Iredell County Mooresville

PLAN DATE:	May 2024	REVIEWED BY:	J Galloway, PE
PREPARED BY:	D Waller, PE	REVIEWED BY:	R Muncey, PE

REVISIONS	INIT.	DATE

SEAL 029904 ENGINEER JASON P. GALLOWAY NORTH CAROLINA PROFESSIONAL

DocuSigned by: Jason Galloway 5/20/2024
10D1E2B40B4B46E... DATE
SIG. INVENTORY NO. 12-1849T1

11:41:46 AM
User:jgalloway
C:\Users\jgalloway\DesignME\Signals\Design\Electrical Details\Temporary Design\MAXTIME\MR-2307B_sm_ele_12-1849t1.dgn

DocuSign Envelope ID: 240CC1EA-8AFD-4D42-8C82-B1465670BE8E

PROJECT REFERENCE NO.	SHEET NO.
R-2307B	Sig. 96.0

3 Phase
Fully Actuated
NC 150 D12-02_MOORESVILLE
CLS

PHASING DIAGRAM

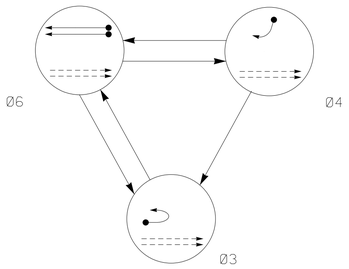

PHASING DIAGRAM DETECTION LEGEND

- DETECTED MOVEMENT
- UNDETECTED MOVEMENT (OVERLAP)
- UNSIGNALIZED MOVEMENT
- PEDESTRIAN MOVEMENT

TABLE OF OPERATION

SIGNAL FACE	PHASE Ø6	PHASE Ø4	PHASE Ø3	PHASE FLASH
31,32	R	R		R
41,42	R		R	R
61		R	R	R
62	G	R	R	R

SIGNAL FACE I.D.

All Heads L.E.D.

Denotes Louvers

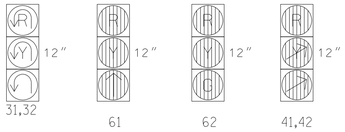

MAXTIME DETECTOR INSTALLATION CHART

DETECTOR					PROGRAMMING						
LOOP	SIZE (FT)	DISTANCE FROM STOPBAR (FT)	TURNS	NEW LOOP	CALL PHASE	DELAY TIME	EXTEND TIME	EXTEND	ADDED INITIAL	CALL	DELAY DURING GREEN	NEW CARD
3A	6X40	0	2-4-2	X	3	-	-	X	-	X	-	X
4A	6X40	0	2-4-2	X	4	-	-	X	-	X	-	X
6A	6X6	300	4	X	6	-	-	X	X	X	-	X
6B	6X6	300	4	X	6	-	-	X	X	X	-	X

NOTES

1. Refer to "Roadway Standard Drawings NCDOT" dated January 2024 and "Standard Specifications for Roads and Structures" dated January 2024.
2. Do not program signal for late night flashing operation unless otherwise directed by the Engineer.
3. The order of phase 3 and phase 4 may be reversed.
4. Set all detector units to presence mode.
5. Maximum times shown in timing chart are for free-run operation only. Coordinated signal system timing values supersede these values.

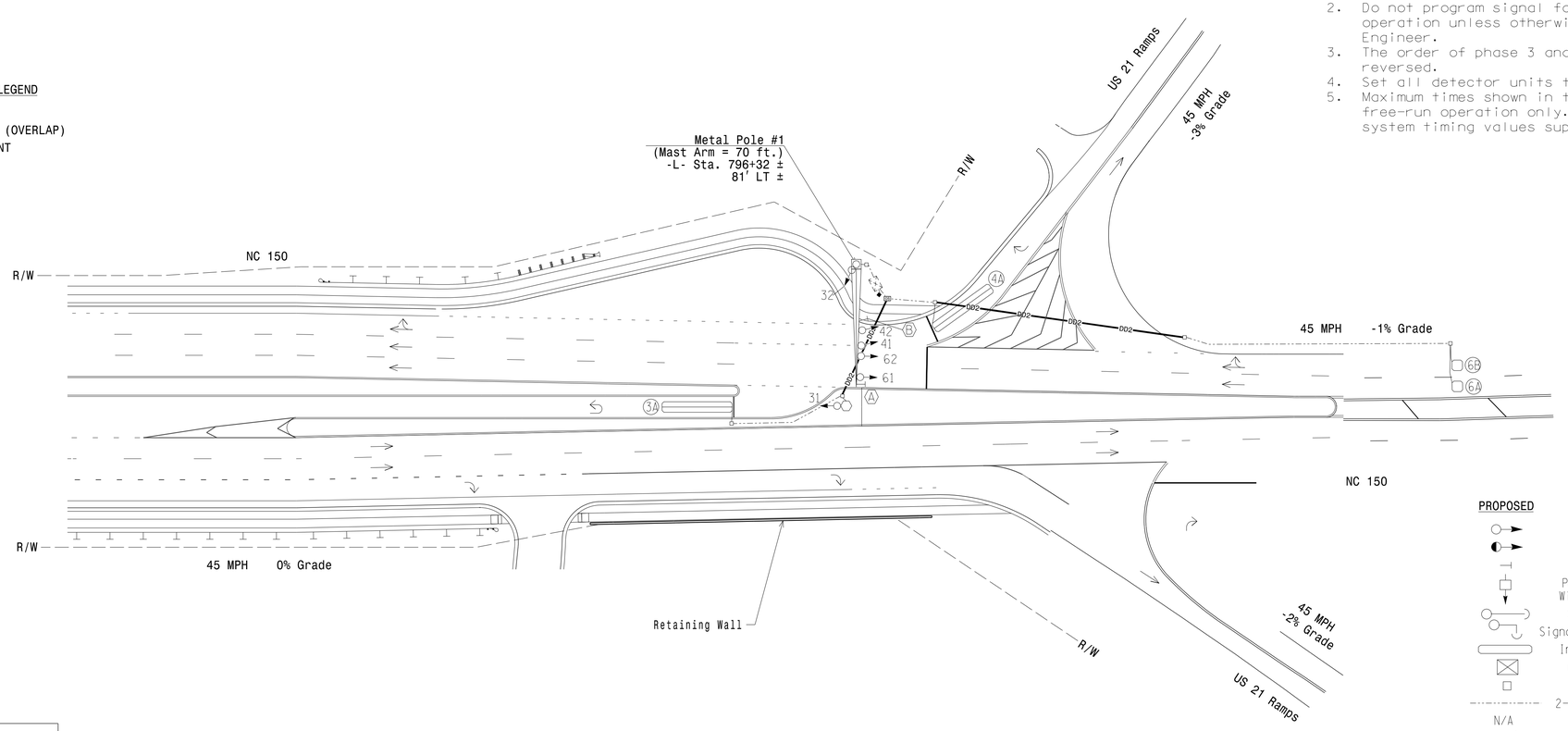

MAXTIME TIMING CHART

FEATURE	PHASE 3	PHASE 4	PHASE 6
Walk *	–	–	–
Ped Clear *	–	–	–
Min Green	7	7	12
Passage *	2.0	2.0	6.0
Max 1 *	30	30	60
Yellow Change	3.0	3.7	4.6
Red Clear	3.3	2.5	1.7
Added Initial *	–	–	1.5
Maximum Initial *	–	–	34
Time Before Reduction *	–	–	15
Time To Reduce *	–	–	30
Minimum Gap	–	–	3.0
Advance Walk	–	–	–
Non Lock Detector	X	X	–
Vehicle Recall	–	–	MIN RECALL
Dual Entry	–	X	–

* These values may be field adjusted. Do not adjust Min Green and Extension times for phase 6 lower than what is shown. Min Green for all other phases should not be lower than 4 seconds.

LEGEND

PROPOSED		EXISTING
	Traffic Signal Head	
	Modified Signal Head	N/A
	Sign	
	Pedestrian Signal Head With Push Button & Sign	
	Signal Pole with Guy	
	Signal Pole with Sidewalk Guy	
	Inductive Loop Detector	
	Controller & Cabinet	
	Junction Box	
	2-in Underground Conduit	
N/A	Right of Way	
	Directional Arrow	
	Metal Pole with Mastarm	
DD#	Directional Drill (#) x 2" Conduit	N/A
	Type II Signal Pedestal	
OS	Oversized Junction Box	
A	No Left Turn Sign (R3-2)	A
B	"NO TURN ON RED" Sign (R10-11)	B

New Installation - Final Design

DOCUMENT NOT CONSIDERED FINAL UNLESS ALL SIGNATURES COMPLETED

Stantec

Stantec Consulting Services Inc.
801 Jones Franklin Road-Suite 300
Raleigh, NC 27606
Tel. (919) 851-6866
Fax. (919) 851-7024
www.stantec.com
License No. F-0672

Prepared for the Offices of:
Transportation Mobility and Safety Division
NORTH CAROLINA DEPARTMENT OF TRANSPORTATION
Signal Design Section
750 N.Greenfield Pkwy,Garner,NC 27529

NC 150 WB
at
MacLeod Drive U-Turn

Division 12 Iredell County Mooresville

PLAN DATE: May 2024 REVIEWED BY: J Galloway, PE
PREPARED BY: J Hambright REVIEWED BY: R Muncey, PE

SCALE 0 40 1"=40'

REVISIONS	INIT.	DATE

SEAL 029904 NORTH CAROLINA PROFESSIONAL ENGINEER JASON P. GALLOWAY

DocuSigned by: Jason Galloway 5/20/2024
10D1E2B40B4B46E...

SIG. INVENTORY NO. 12-1849

$$$$$$S'SDATE$$$$$
11:42:46 AM
User:jgalloway
\\Mcfiles\Groups\Design\Signal Design\Final Design\R-2307B_sig_dsn_12-1849.dgn

DocuSign Envelope ID: 240CC1EA-8AFD-4D42-8C82-B1465670BE8E

18 CHANNEL IP CONFLICT MONITOR PROGRAMMING DETAIL

(set switches as shown)

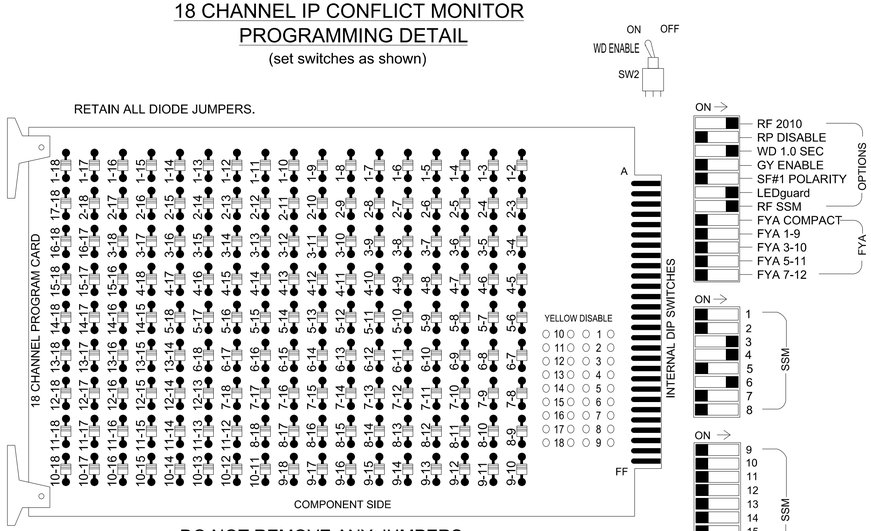

DO NOT REMOVE ANY JUMPERS

NOTES:

1. Card is provided with all diode jumpers in place. Removal of any jumper allows its channels to run concurrently.
2. Ensure jumpers SEL2-SEL5 and SEL9 are present on the monitor board.
3. Ensure that the Red Enable is active at all times during normal operation.
4. Integrate monitor with Ethernet network in cabinet.

NOTES

1. To prevent "flash-conflict" problems, insert red flash program blocks for all unused vehicle load switches in the output file. The installer shall verify that signal heads flash in accordance with the signal plan.
2. Program controller to start up in phase 2 Phase Not On and 6 Green No Walk.
3. If this signal will be managed by an ATMS software, enable controller and detector logging for all detectors used at this location.
4. The cabinet and controller are part of the NC 150 D12-02_Mooresville CLS.

EQUIPMENT INFORMATION

Controller.....2070LX
Cabinet.....332 w/ Aux
Software.....Q-Free MAXTIME
Cabinet Mount.....Base
Output File Positions.....18 With Aux. Output File
Load Switches Used.....S4, S5, S8
Phases Used.....3, 4, 6
Overlap "1".....NOT USED
Overlap "2".....NOT USED
Overlap "3".....NOT USED
Overlap "4".....NOT USED

PROJECT REFERENCE NO.	SHEET NO.
R-2307B	Sig. 96.1

SIGNAL HEAD HOOK-UP CHART

LOAD SWITCH NO.	S1	S2	S3	S4	S5	S6	S7	S8		S9	S10	S11	S12	AUX S1	AUX S2	AUX S3	AUX S4	AUX S5	AUX S6
CMU CHANNEL NO.	1	2	13	3	4	14	5	6		15	7	8	16	9	10	17	11	12	18
PHASE	1	2	2 PED	3	4	4 PED	5	6		6 PED	7	8	8 PED	OL1	OL2	SPARE	OL3	OL4	SPARE
SIGNAL HEAD NO.	NU	NU	NU	31,32	41,42	NU	NU	61	62	NU	NU	NU	NU	NU	NU	NU	NU	NU	NU
RED					101			134	134										
YELLOW								135	135										
GREEN									136										
RED ARROW				116															
YELLOW ARROW				117	102														
GREEN ARROW				118	103			136											
✋																			
🚶																			

NU = Not Used

SEQUENCE DETAIL

Front Panel
Main Menu >Controller >Sequence & Phs Config>Sequences

Web Interface
Home >Controller >Sequence

Sequence 1

Ring	Sequence Data
1	6,a,3,4,b
2	

INPUT FILE POSITION LAYOUT

(front view)

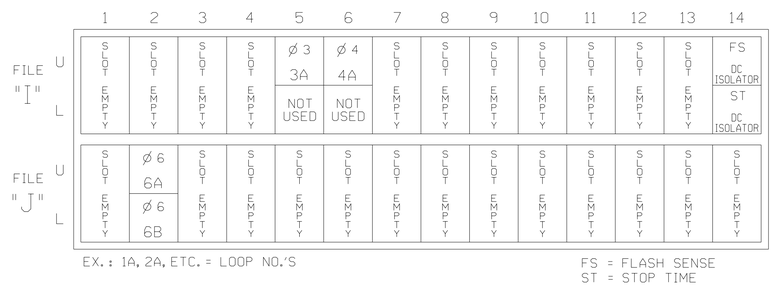

EX.: 1A, 2A, ETC. = LOOP NO.'S

FS = FLASH SENSE
ST = STOP TIME

INPUT FILE CONNECTION & PROGRAMMING CHART

LOOP NO.	LOOP TERMINAL	INPUT FILE POS.	PIN NO.	INPUT POINT	DETECTOR NO.	CALL PHASE	DELAY TIME	EXTEND TIME	EXTEND	ADDED INITIAL	CALL	DELAY DURING GREEN
3A	TB4-5,6	I5U	58	20	7	3			X		X	
4A	TB4-9,10	I6U	41	3	8	4			X		X	
6A	TB3-5,6	J2U	40	2	16	6			X	X	X	
6B	TB3-7,8	J2L	44	6	17	6			X	X	X	

INPUT FILE POSITION LEGEND: J2L

- FILE J
- SLOT 2
- LOWER

THIS ELECTRICAL DETAIL IS FOR
THE SIGNAL DESIGN: 12-1849
DESIGNED: MAY 2024
SEALED: 5/20/2024
REVISED: N/A

Electrical Detail - Final Design

DOCUMENT NOT CONSIDERED FINAL UNLESS ALL SIGNATURES COMPLETED

Stantec
Stantec Consulting Services Inc.
801 Jones Franklin Road-Suite 300
Raleigh, NC 27606
Tel. (919) 851-6866
Fax. (919) 851-7024
www.stantec.com
License No. F-0672

ELECTRICAL AND PROGRAMMING DETAILS FOR:

Prepared for the Offices of:

Transportation Mobility and Safety Division
STATE OF NORTH CAROLINA
DEPARTMENT OF TRANSPORTATION
ITS & Signals Management Section

750 N. Greenfield Pkwy, Garner, NC 27529

NC 150 WB
at
MacLeod Drive U-Turn

Division 12 Iredell County Mooresville

PLAN DATE:	May 2024	REVIEWED BY:	J Galloway, PE
PREPARED BY:	D Waller, PE	REVIEWED BY:	R Muncey, PE

REVISIONS	INIT.	DATE

SEAL 029904 ENGINEER JASON P. GALLOWAY NORTH CAROLINA PROFESSIONAL

DocuSigned by: Jason Galloway 5/20/2024
10D1E2B40B4B4BE... DATE

STD. INVENTORY NO. 12-1849

11:43:40 AM
U:\Traffic\Projects\Design\Electrical Details\Final Design\MAXTIME\R-2307B_sm_ele_12-1849.dgn
User:jgalloway

DocuSign Envelope ID: 240CC1EA-8AFD-4D42-8C82-B1465670BE8E

Design Loading for METAL POLE NO. 1

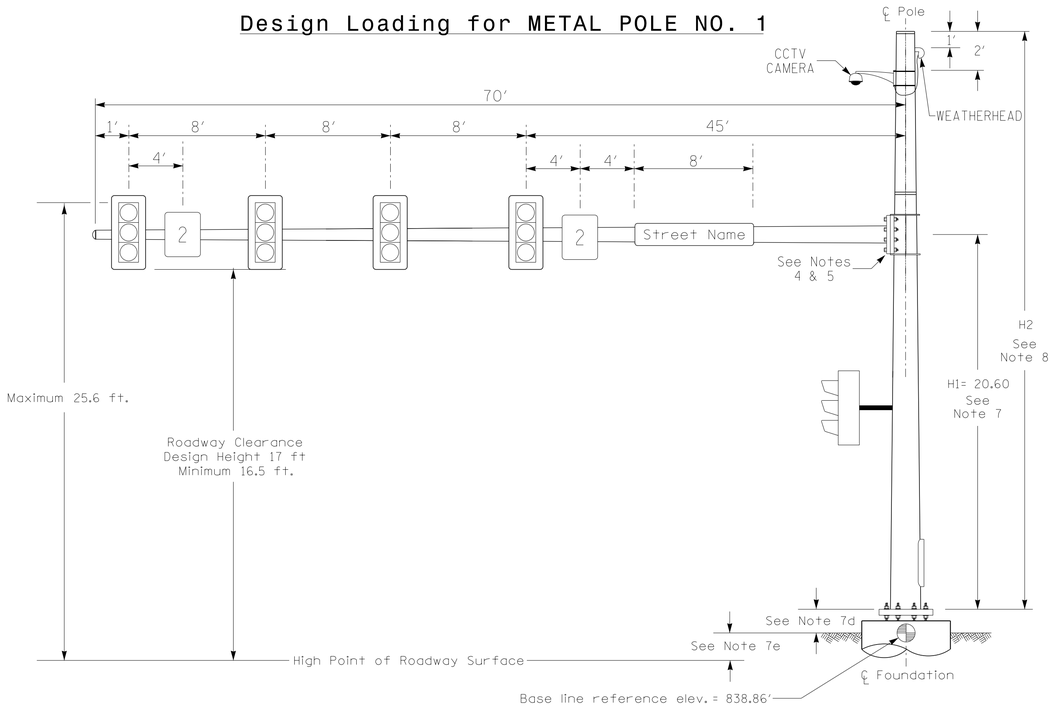

Elevation View

SPECIAL NOTE

The contractor is responsible for verifying that the mast arm attachment height (H1) will provide the "Design Height" clearance from the roadway before submitting final shop drawings for approval. Verify elevation data below which was obtained by field measurement or from available project survey data.

Elevation Data for Mast Arm Attachment (H1)

Elevation Differences for:	Pole 1	
Baseline reference point at ℄ Foundation @ ground level	838.86 ft.	
Elevation difference at High point of roadway surface	+1.51 ft.	
Elevation difference at Edge of travelway or face of curb	+/-0.0 ft.	

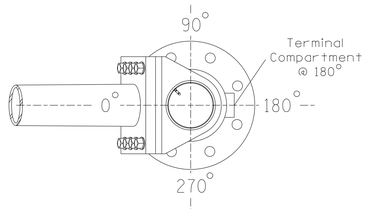

POLE RADIAL ORIENTATION

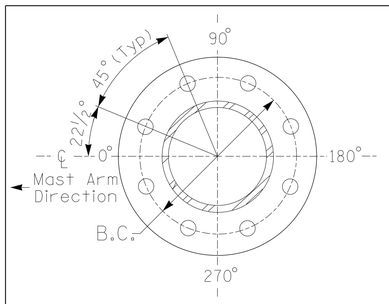

8 BOLT BASE PLATE DETAIL

See Note 6

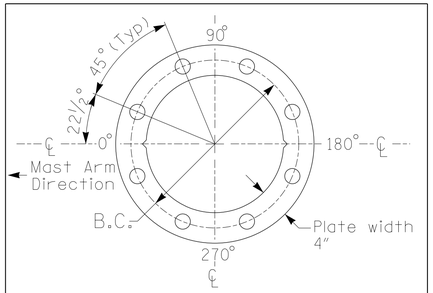

BASE PLATE TEMPLATE & ANCHOR BOLT LOCK PLATE DETAIL

For 8 Bolt Base Plate

METAL POLE No. 1

PROJECT REFERENCE NO.	SHEET NO.
R-2307B	Sig. 96.2

MAST ARM LOADING SCHEDULE

LOADING SYMBOL	DESCRIPTION	AREA	SIZE	WEIGHT
	RIGID MOUNTED SIGNAL HEAD 12"-3 SECTION-WITH BACKPLATE	9.3 S.F.	25.5"W X 52.5"L	60 LBS
2	SIGN RIGID MOUNTED	7.5 S.F.	30.0"W X 36.0"L	14 LBS
Street Name	STREET NAME SIGN RIGID MOUNTED	16.0 S.F.	24.0"W X 96.0"L	36 LBS
	CCTV CAMERA ARM-MOUNTED	1.0 S.F.	11.0"W X 11.0"L	30 LBS

NOTES

DESIGN REFERENCE MATERIAL

1. Design the traffic signal structure and foundation in accordance with:
   - The 1st Edition 2015 AASHTO LRFD "Standard Specifications for Structural Supports for Highway Signs, Luminaires, and Traffic Signals, including all of the latest interim revisions.
   - The 2024 NCDOT "Standard Specifications for Roads and Structures." The latest addenda to the specifications can be found in the traffic signal project special provisions.
   - The 2024 NCDOT Roadway Standard Drawings.
   - The traffic signal project plans and special provisions.
   - The NCDOT "Metal Pole Standards" located at the following NCDOT website: https://connect.ncdot.gov/resources/safety/Pages/ITS-Design-Resources.aspx

DESIGN REQUIREMENTS

2. Design the traffic signal structure using the loading conditions shown in the elevation views. These are anticipated worst case "design loads" and may not represent the actual loads that will be applied at the time of the installation. The contractor should refer to the traffic signal plans for the actual loads that will be applied at the time of the installation.
3. Design all signal supports using force ratios that do not exceed 0.9.
4. The camber design for the mast arm deflection should provide an appearance of a low pitched arch where the tip or the free end of the mast arm does not deflect below horizontal when fully loaded.
5. A clamp-type bolted mast arm-to-pole connection may be used instead of the welded ring stiffened box connection shown as long as the connection meets all of the design requirements.
6. Design base plate with 8 anchor bolt holes. Provide 2 inch x 60 inch anchor bolts.
7. The mast arm attachment height (H1) shown is based on the following design assumptions:
   a. Mast arm slope and deflection are not considered in determining the arm attachment height as they are assumed to offset each other.
   b. Signal heads are rigidly mounted and vertically centered on the mast arm.
   c. The roadway clearance height for design is as shown in the elevation views.
   d. The top of the pole base plate is 0.75 feet above the ground elevation.
   e. Refer to the Elevation Data Chart for the elevation differences between the proposed foundation ground level and the high point of the roadway.
8. The pole manufacturer will determine the total height (H2) of each pole using the following: Mast arm attachment height (H1) plus 10 feet.
9. If pole location adjustments are required, the contractor must gain approval from the engineer as this may affect the mast arm lengths and arm attachment heights. The contractor may contact the Signal Design Section Senior Structural Engineer for assistance at (919) 814-5000.
10. The contractor is responsible for verifying that the mast arm length shown will allow proper positioning of the signal heads over the roadway.
11. The contractor is responsible for providing soil penetration testing data (SPT) to the pole manufacturer so site specific foundations can be designed.
12. Install CCTV camera 2 feet below top of pole.
13. Install the weatherhead 1 foot below top of pole.

NCDOT Wind Zone 5 (110 mph)

Stantec

DOCUMENT NOT CONSIDERED FINAL UNLESS ALL SIGNATURES COMPLETED

Prepared for the Offices of:
Transportation Mobility and Safety Division
NORTH CAROLINA DEPARTMENT OF TRANSPORTATION
Signal Design Section

750 N.Greenfield Pkwy.Garner,NC 27529

NC 150 WB
at
MacLeod Drive U-Turn

Division 12 Iredell County Mooresville

PLAN DATE:	November 2023	REVIEWED BY:	J. Galloway, PE
PREPARED BY:	J. Hambright	REVIEWED BY:	R. Muncey, PE

SCALE: 0 N/A — N/A

REVISIONS	INIT.	DATE

NORTH CAROLINA PROFESSIONAL SEAL 029904 ENGINEER JASON P. GALLOWAY

DocuSigned by: Jason Galloway 5/20/2024
10D1E2840B4B46E...

SIGNATURE DATE

SIG. INVENTORY NO. 12-1849

5/17/2024
11:14:29 AM
User:jgalloway
C:\Users\jgalloway\Desktop\Metal Poles\Design\Metal Poles\Loading Diagrams\Loading Diagram_Single Mast Arm_12-1849.dgn

PROJECT I.D. NO.	SHEET NO.
R-2307B	Sig.M1A

STATE OF NORTH CAROLINA
DIVISION OF HIGHWAYS

STANDARD DRAWINGS FOR ALL METAL POLES (LRFD)

NCDOT METAL POLE STANDARDS

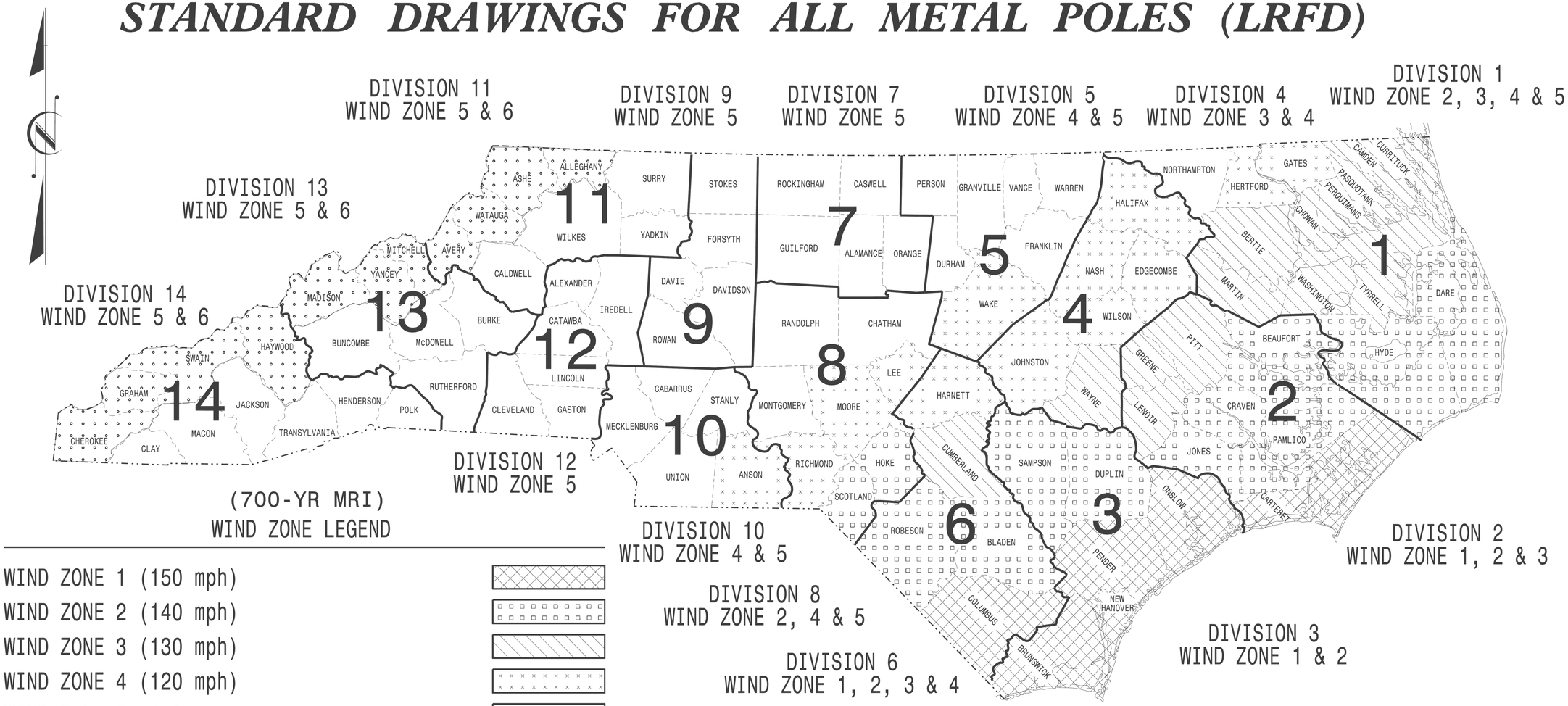

(700-YR MRI)
WIND ZONE LEGEND

WIND ZONE 1 (150 mph)	
WIND ZONE 2 (140 mph)	
WIND ZONE 3 (130 mph)	
WIND ZONE 4 (120 mph)	
WIND ZONE 5 (110 mph)	
WIND ZONE 6 (135 mph) Special Wind Zone	

https://connect.ncdot.gov/resources/safety/Pages/ITS-Design-Resources.aspx

Prepared in the Offices of:

Transportation Mobility and Safety Division
STATE OF NORTH CAROLINA
DEPARTMENT OF TRANSPORTATION
Signal Design Section

750 N.Greenfield Pkwy.
Garner, NC 27529

Designed in conformance with the latest 2020 Interim to the 1st Edition 2015

AASHTO LRFD

Standard Specifications for Highway Signs, Luminaires, and Traffic Signals

INDEX OF PLANS

DRAWING NUMBER	DESCRIPTION
Sig. M 1A	Statewide Wind Zone Map (700-yr MRI)
Sig. M 1B	Statewide Wind Zone Map (10-yr MRI)
Sig. M 2	Typical Fabrication Details-All Metal Poles
Sig. M 3	Typical Fabrication Details-Strain Poles
Sig. M 4	Typical Fabrication Details-Mast Arm Poles
Sig. M 5	Typical Fabrication Details-Mast Arm Connection
Sig. M 6	Typical Fabrication Details-Strain Pole Attachments
Sig. M 7	Construction Details-Foundations
Sig. M 8	Standard Strain Pole Foundation-All Soil Conditions
Sig. M 9	Typical Fabrication Details-CCTV Camera Poles

MOBILITY AND SAFETY DIVISION – TRANSPORTATION SYSTEMS MANAGEMENT AND OPERATIONS UNIT

D.Y. ISHAK – STATE SIGNALS ENGINEER

K. DURIGON, P.E. – ITS AND SIGNALS STRUCTURAL ENGINEER

B. WALKER, P.E. – ITS AND SIGNALS STRUCTURAL ENGINEER

SEAL

NORTH CAROLINA PROFESSIONAL SEAL 036626 ENGINEER KEVIN C. DURIGON

DocuSigned by:
Kevin Durigon
SIGNATURE
4B23DC79B3784DA
09/21/2023
DATE

03-OCT-2023 12:07
S:\ITS&SU\ITS Signals\Signal Design Section\Structures\Drawings\2024 Metal Pole Std Drawings for LRFD\2024 Sig. M1A Standard All Metal Pole (700-yr MRI).dgn
kcdurigon

PROJECT I.D. NO.	SHEET NO.
R-2307B	Sig.M1B

STATE OF NORTH CAROLINA
DIVISION OF HIGHWAYS

STANDARD DRAWINGS FOR ALL METAL POLES (LRFD)

NCDOT METAL POLE STANDARDS

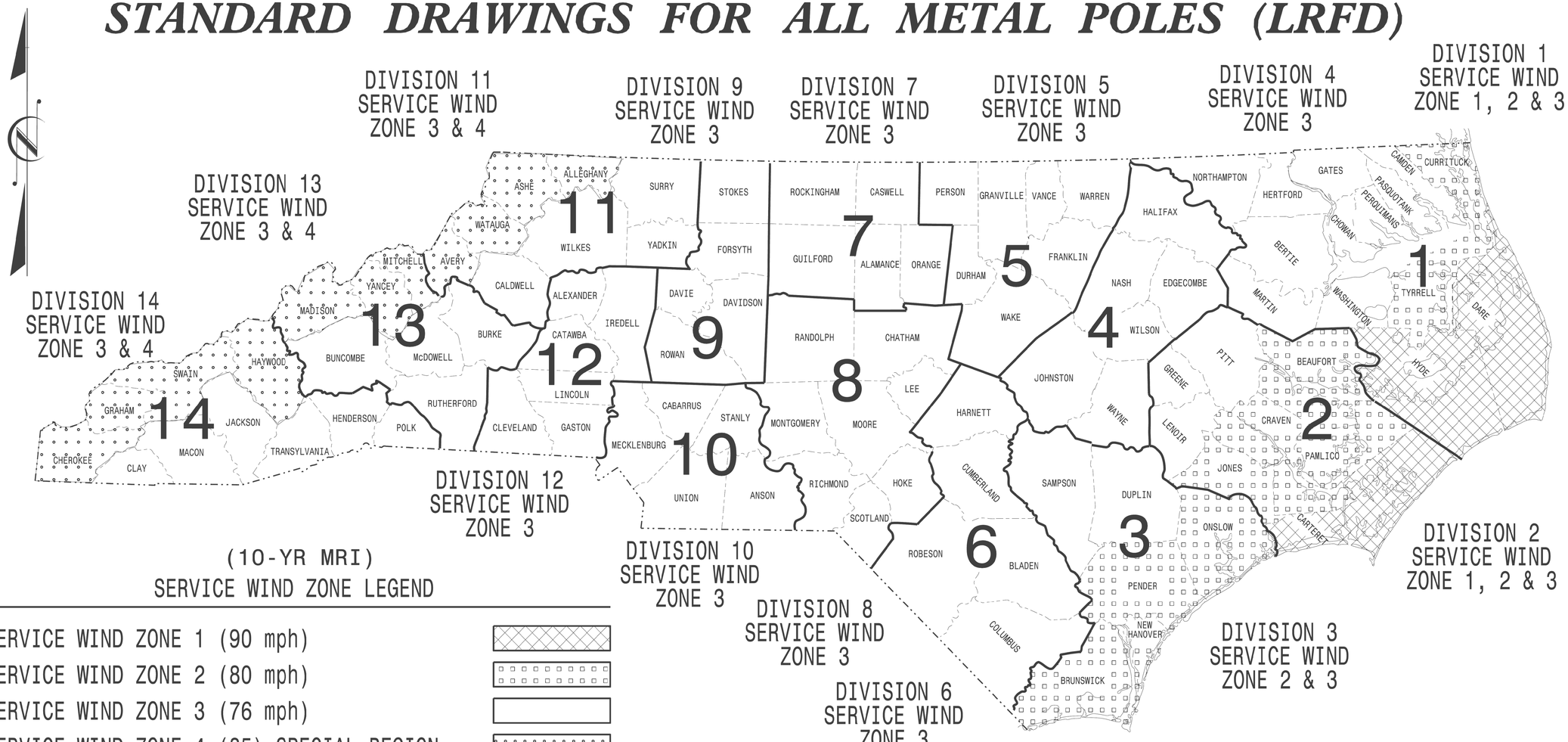

(10-YR MRI)
SERVICE WIND ZONE LEGEND

SERVICE WIND ZONE 1 (90 mph)
SERVICE WIND ZONE 2 (80 mph)
SERVICE WIND ZONE 3 (76 mph)
SERVICE WIND ZONE 4 (85) SPECIAL REGION

https://connect.ncdot.gov/resources/safety/Pages/ITS-Design-Resources.aspx

Prepared in the Offices of:

Transportation Mobility and Safety Division
STATE OF NORTH CAROLINA
DEPARTMENT OF TRANSPORTATION
Signal Design Section

750 N.Greenfield Pkwy.
Garner, NC 27529

Designed in conformance with the latest 2020 Interim to the 1st Edition 2015

AASHTO LRFD

Standard Specifications for Highway Signs, Luminaires, and Traffic Signals

INDEX OF PLANS

DRAWING NUMBER	DESCRIPTION
Sig. M 1A	Statewide Wind Zone Map (700-yr MRI)
Sig. M 1B	Statewide Wind Zone Map (10-yr MRI)
Sig. M 2	Typical Fabrication Details-All Metal Poles
Sig. M 3	Typical Fabrication Details-Strain Poles
Sig. M 4	Typical Fabrication Details-Mast Arm Poles
Sig. M 5	Typical Fabrication Details-Mast Arm Connection
Sig. M 6	Typical Fabrication Details-Strain Pole Attachments
Sig. M 7	Construction Details-Foundations
Sig. M 8	Standard Strain Pole Foundation-All Soil Conditions
Sig. M 9	Typical Fabrication Details-CCTV Camera Poles

NCDOT CONTACTS:

MOBILITY AND SAFETY DIVISION – TRANSPORTATION SYSTEMS MANAGEMENT AND OPERATIONS UNIT

D.Y. ISHAK – STATE SIGNALS ENGINEER

K. DURIGON, P.E. – ITS AND SIGNALS STRUCTURAL ENGINEER

B. WALKER, P.E. – ITS AND SIGNALS STRUCTURAL ENGINEER

SEAL

NORTH CAROLINA PROFESSIONAL SEAL 036626 ENGINEER KEVIN C. DURIGON

DocuSigned by:
Kevin Durigon
SIGNATURE
4B23DC79B3784DA...
09/21/2023
DATE

03-OCT-2023 12:21
S:\ITS&SU\ITS Signals\Signal Design Section\Structures\Drawings\2024 Metal Pole Std Drawings for LRFD\2024 Sig. M1B Standard All Metal Pole (10-yr MRI).dgn
kcdurigon

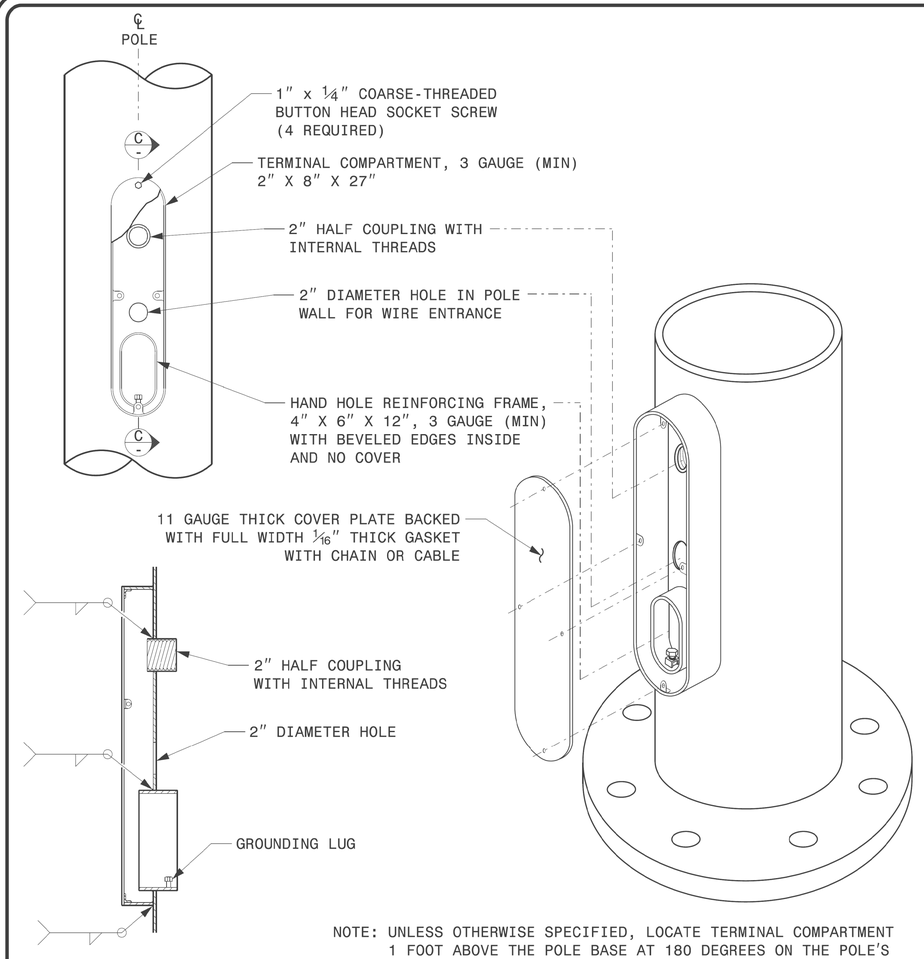

SECTION C-C

NOTE: UNLESS OTHERWISE SPECIFIED, LOCATE TERMINAL COMPARTMENT 1 FOOT ABOVE THE POLE BASE AT 180 DEGREES ON THE POLE'S RADIAL INDEX.

TERMINAL COMPARTMENT DETAIL

MFG _____ MFG. DATE: MM/YY
SHAFT D/T/L/Y ----/----/----/----
ARM-A D/T/L/Y ----/----/----/----
----/----/----/----
ARM-B D/T/L/Y ----/----/----/----
----/----/----/----
A.B. DIA./B.C./L/Y ----/----/----/----
NCDOT SIG. INV. NO. _____
NCDOT POLE NO. _____

SHAFT I.D. TAG
(PROVIDE ON SHAFT OF STRAIN POLES AND MAST ARM POLE SHAFT)

MFG _____ MFG. DATE: MM/YY
SECTION D/T/L/Y ----/----/----/----
NCDOT SIG. INV. NO. _____
NCDOT POLE NO. _____

ARM I.D. TAG
(PROVIDE ON EACH SECTION OF A MULTI-SECTION MAST ARM)

NOTES:

1. D = DIAMETER, T = THICKNESS, L = LENGTH, Y = YIELD STRENGTH
2. A.B. = ANCHOR BOLT
3. B.C. = BOLT CIRCLE OF ANCHOR BOLTS
4. IF STANDARD DESIGN, INCLUDE CASE NUMBER IN ADDITION TO POLE NUMBER ON "NCDOT POLE NO." LINE.
5. SIGNAL INV. NUMBER AND POLE I.D. NUMBER. SEE DRAWING M3 AND M4 FOR MOUNTING POSITIONS OF I.D. TAGS.

IDENTIFICATION TAG DETAILS

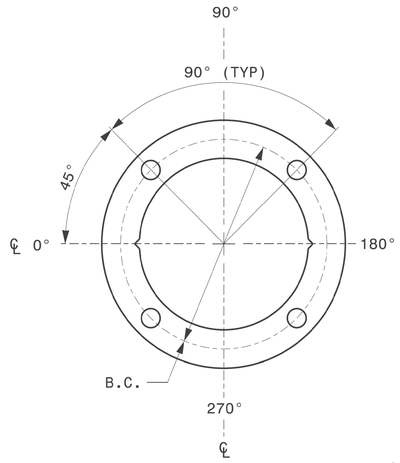

4 BOLT PATTERN

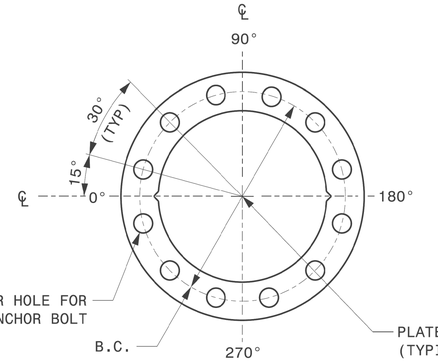

12 BOLT PATTERN

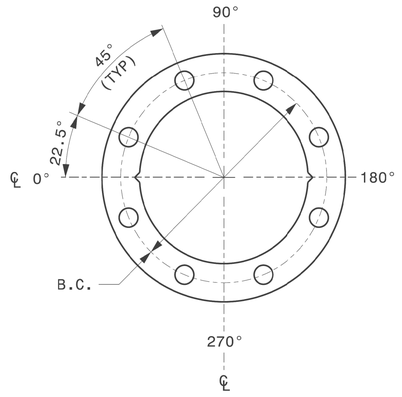

8 BOLT PATTERN

CONSTRUCT TEMPLATES AND PLATES FROM ¼″ (MIN) THICK STEEL. GALVANIZING IS NOT REQUIRED.

BASE PLATE TEMPLATE AND ANCHOR BOLT LOCK PLATE DETAILS

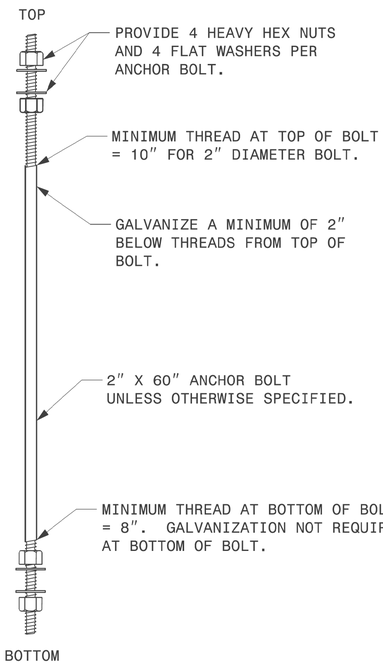

ANCHOR BOLT DETAIL

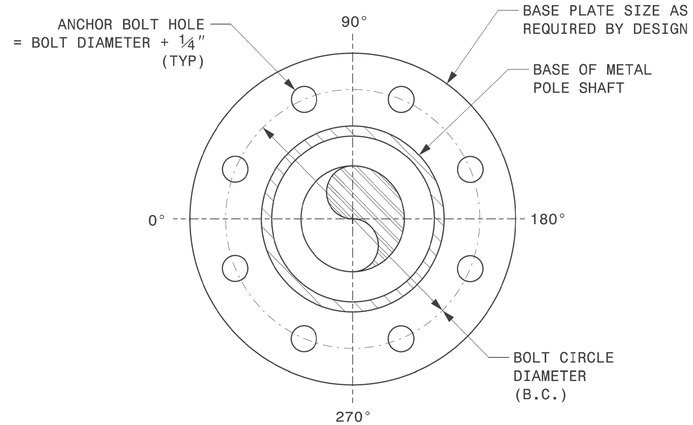

NOTE: BASE PLATE MAY BE CIRCULAR, OCTAGONAL, SQUARE OR RECTANGULAR IN SHAPE.

TYPICAL BASE PLATE DETAIL

Prepared in the Offices of:
Transportation Mobility and Safety Division
Signal Design Section
750 N.Greenfield Pkwy,Garner,NC 27529

SCALE 0 NA NONE

Typical Fabrication Details For All Metal Poles

PLAN DATE: SEPTEMBER 2023 DESIGNED BY: C.F.ANDREWS
PREPARED BY: K.C. DURIGON REVIEWED BY: D.C. SARKAR

REVISIONS	INIT.	DATE

SEAL
NORTH CAROLINA PROFESSIONAL SEAL 036626 ENGINEER KEVIN C. DURIGON

DocuSigned by: Kevin Durigon SIGNATURE 09/21/2023 DATE
4B23DC79B3784DA...

Fabrication Details – All Metal Poles

03-OCT-2023 15:24
S:\STS\SIGNAL\STS Signals\Signal Design Section\Structures\Drawings\2024 Metal Pole Std Drawings for LRFD\2024 Sig\M2 Std. Fabrication Details-All Poles..dgn
kcdurigon

PROJECT I.D. NO.	SHEET NO.
R-2307B	Sig.M3

Fabrication Details – Strain Poles

NOTE:

1. OPENING IN POLE BASE PLATE SHALL BE EQUAL TO POLE BASE INSIDE DIAMETER MINUS 3½" BUT SHALL NOT BE LESS THAN 8½".

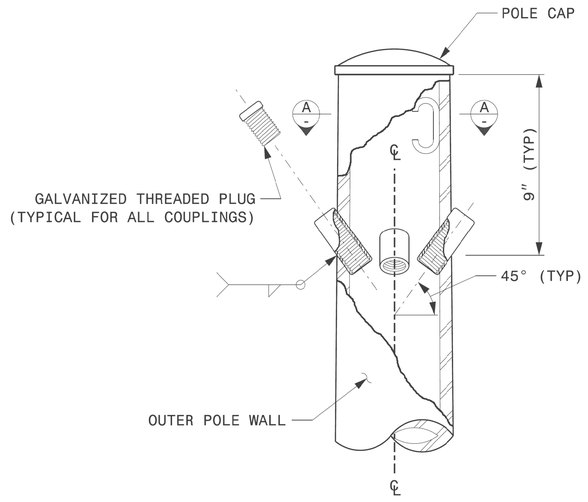

CABLE ENTRANCES AT TOP OF POLE

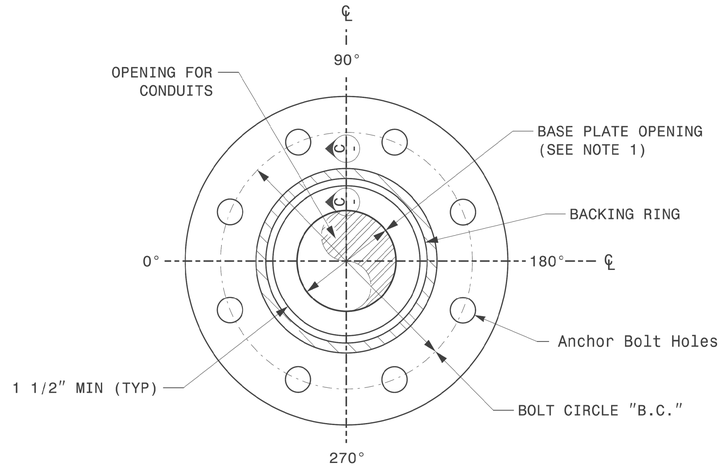

SECTION B-B

POLE BASE PLATE DETAILS
(8 AND 12 BOLT PATTERN)

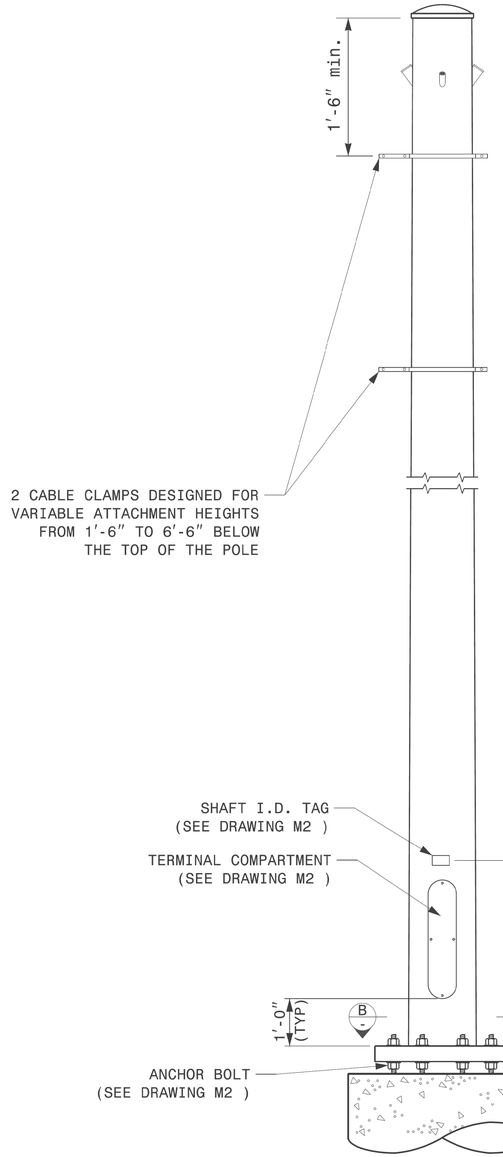

MONOTUBE STRAIN POLE

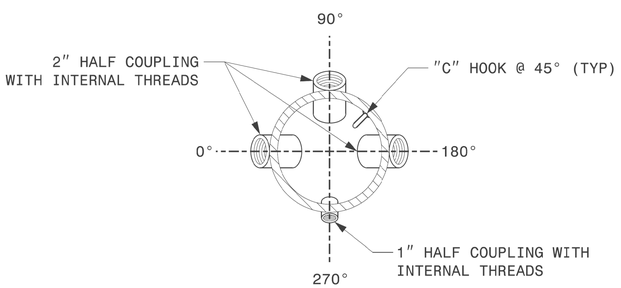

SECTION A-A

RADIAL ORIENTATION OF FACTORY INSTALLED ACCESSORIES AT TOP OF POLE

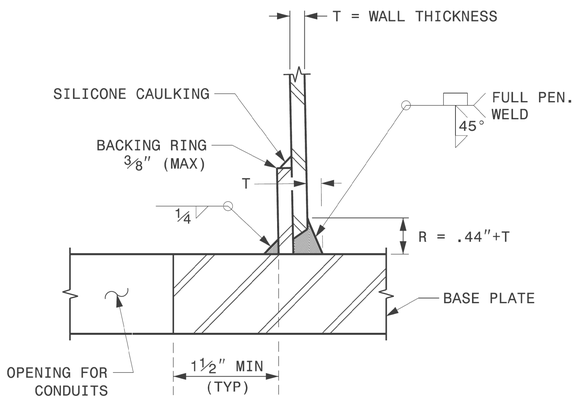

SECTION C-C

(POLE ATTACHMENT TO BASE PLATE)

FULL-PENETRATION GROOVE WELD DETAIL

Prepared in the Offices of:
Transportation Mobility and Safety Division
NORTH CAROLINA DEPARTMENT OF TRANSPORTATION
Signal Design Section
750 N.Greenfield Pkwy.Garner,NC 27529

SCALE
0 NA
NONE

Typical Fabrication Details
For
Strain Poles

PLAN DATE:	SEPTEMBER 2023	DESIGNED BY:	K.C. DURIGON
PREPARED BY:	K.C. DURIGON	REVIEWED BY:	D.C. SARKAR

REVISIONS	INIT.	DATE

SEAL

NORTH CAROLINA PROFESSIONAL SEAL 036626 ENGINEER KEVIN C. DURIGON

DocuSigned by:
Kevin Durigon
SIGNATURE
4B23DC79B3784DA...
09/21/2023
DATE

09-20-2023 12:21
S:\NITSS\NITS Signals\Signal Design Section\Structures\Drawings\2024 Metal Pole Std Drawings for LRFD\2024 Sig.M3 Std. Fabrication Details-Strain Poles.dgn
kcdurigon

PROJECT I.D. NO.	SHEET NO.
R-2307B	Sig.M4

NOTE:

1. OPENING IN POLE BASE PLATE SHALL BE EQUAL TO POLE BASE INSIDE DIAMETER MINUS 3½" BUT SHALL NOT BE LESS THAN 8½".

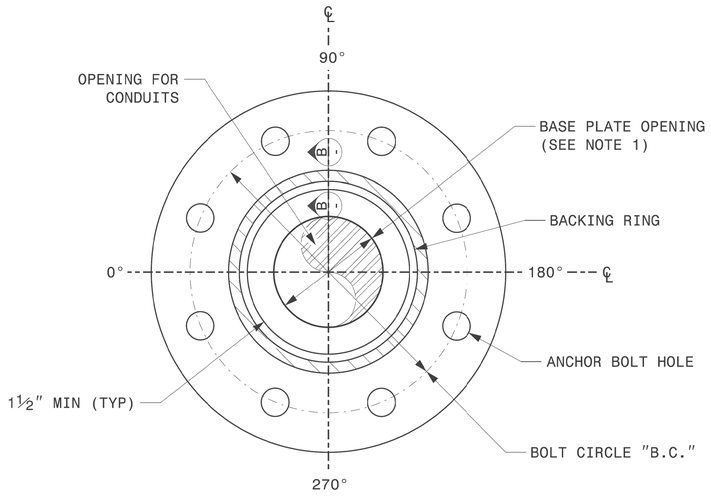

SECTION A-A
POLE BASE PLATE DETAILS

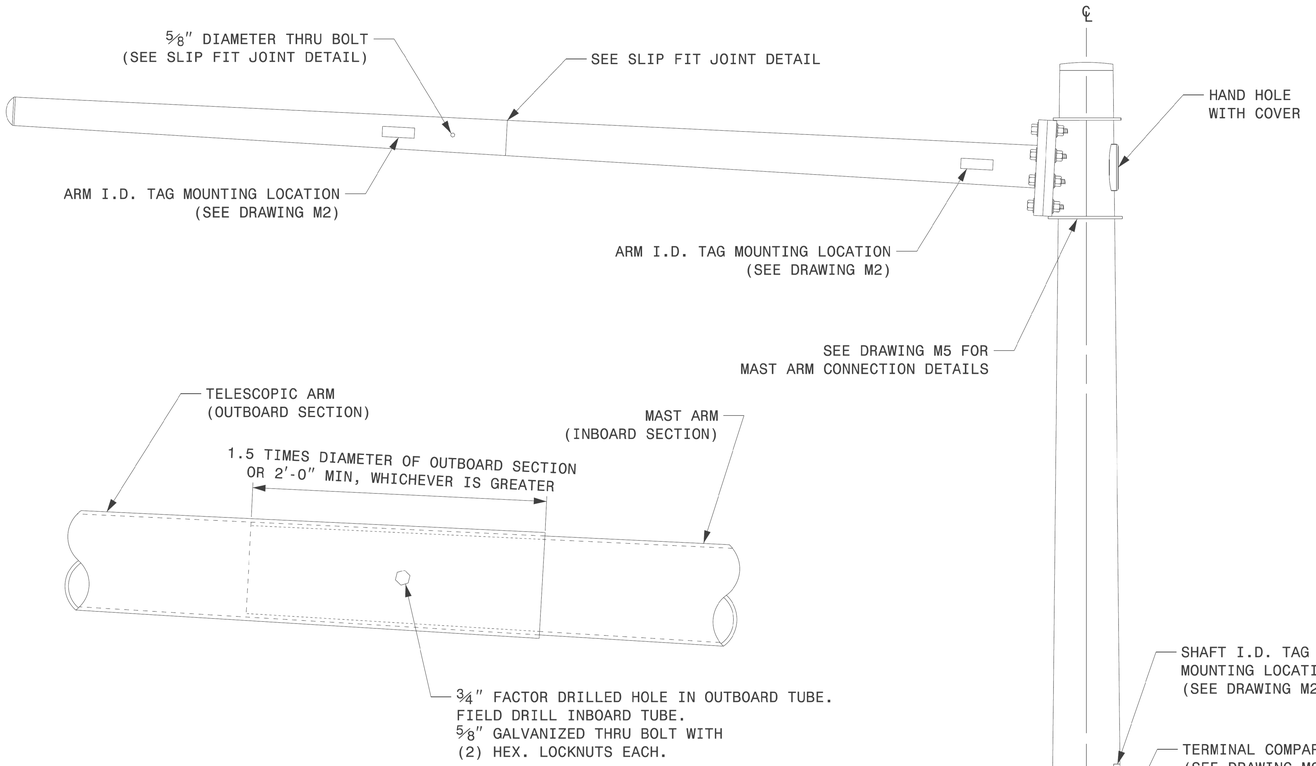

SLIP FIT JOINT DETAIL FOR MAST ARM

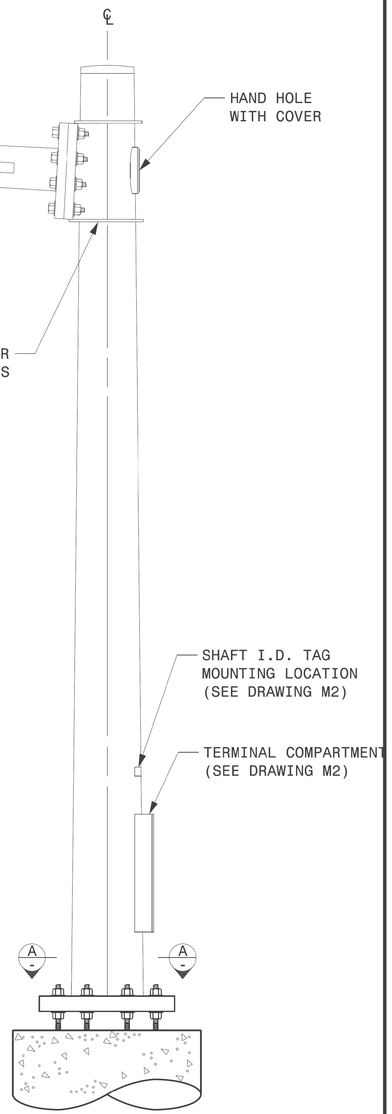

MAST ARM POLE

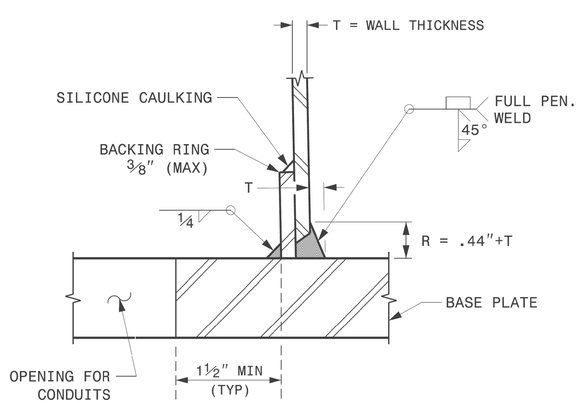

SECTION B-B
(POLE ATTACHMENT TO BASE PLATE)

FULL-PENETRATION GROOVE WELD DETAIL

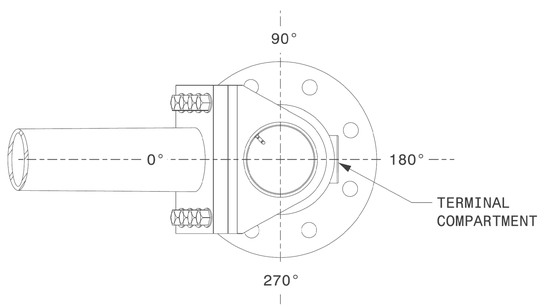

MAST ARM RADIAL ORIENTATION

Fabrication Details – Mast Arm Poles

Prepared in the Offices of:
Transportation Mobility and Safety Division
Signal Design Section
750 N.Greenfield Pkwy,Garner,NC 27529

SCALE
0 NA
NONE

Typical Fabrication Details For Mast Arm Poles

PLAN DATE:	SEPTEMBER 2023	DESIGNED BY:	K.C. DURIGON
PREPARED BY:	K.C. DURIGON	REVIEWED BY:	D.C. SARKAR

REVISIONS	INIT.	DATE

SEAL
NORTH CAROLINA PROFESSIONAL SEAL 036626 ENGINEER KEVIN C. DURIGON

DocuSigned by:
Kevin Durigon
SIGNATURE
4B23DC79B3784DA
09/21/2023
DATE

03-OCT-2023 12:35
S:\TS&SU\ITS Signals\Signal Design Section\Structures\Drawings\2024 Metal Pole Std Drawings for LRFD\2024 Sig.M4 Std. Fabrication Details-Mast Arm Poles.dgn
kcdurigon

WELDED RING STIFFENED MAST ARM CONNECTION

PROJECT I.D. NO.	SHEET NO.
R-2307B	Sig.M5

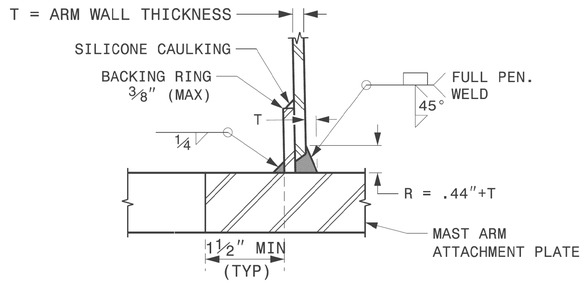

SECTION B-B
FULL-PENETRATION GROOVE WELD DETAIL

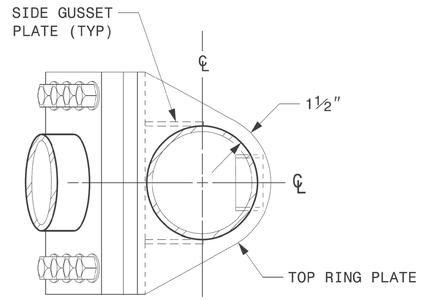

PLAN VIEW

NOTES:

1. PROVIDE A PERMANENT MEANS OF IDENTIFICATION ABOVE THE MAST ARM TO INDICATE PROPER ATTACHMENT ORIENTATION OF THE MAST ARM.
2. DESIGNER WILL DETERMINE THE SIZE OF ALL STRUCTURAL COMPONENTS, PLATES, FASTENERS, AND WELDS SHOWN UNLESS THEY ARE ALREADY SPECIFIED.
3. FABRICATOR IS RESPONSIBLE FOR PROVIDING APPROPRIATE HOLES AT DRAINAGE POINTS TO DRAIN GALVANIZING MATERIALS.
4. FOR MINIMUM EDGE DISTANCE AND NOMINAL BOLT HOLE SIZE, FOLLOW THE LATEST AISC STEEL CONSTRUCTION MANUAL.
5. PROVIDE UPPER HANDHOLE AS NECESSARY WHEN SHAFT EXTENSIONS ARE REQUIRED FOR LUMINAIRE ARMS OR CAMERA. FOR POLES WITHOUT LUMINAIRES/CAMERA, WIRING CAN BE DONE THROUGH THE TOP OF POLE.
6. ALLOWABLE RANGE OF FLANGE TILT ANGLE WILL VARY FROM 0° TO AS REQUIRED.

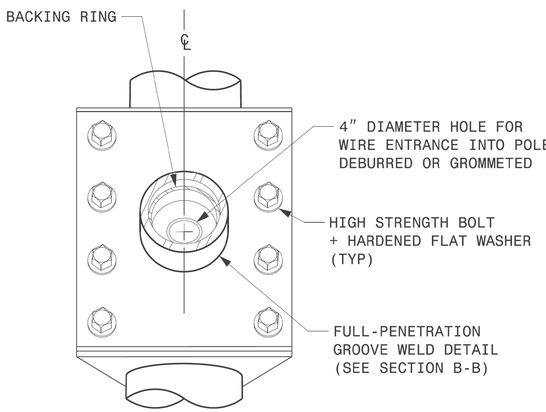

FRONT ELEVATION VIEW

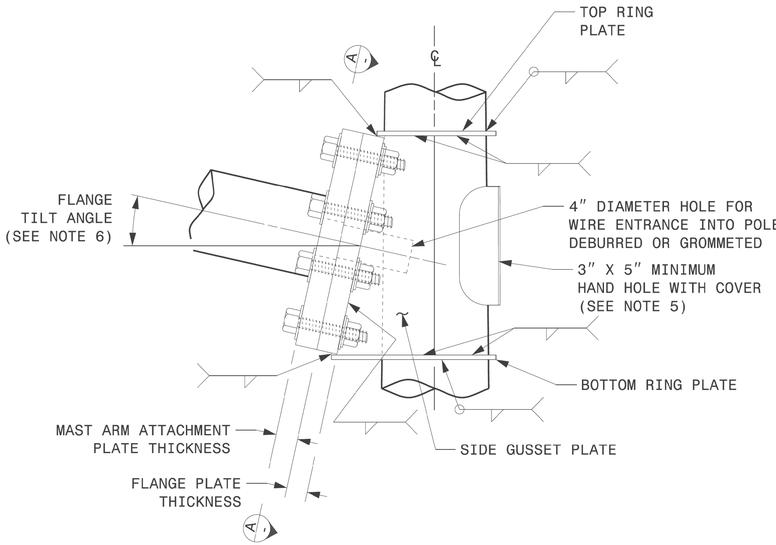

SIDE ELEVATION VIEW

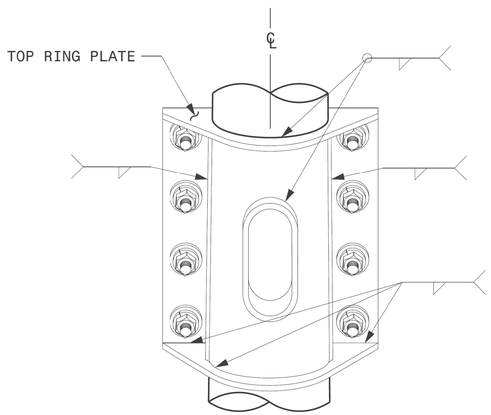

BACK ELEVATION VIEW

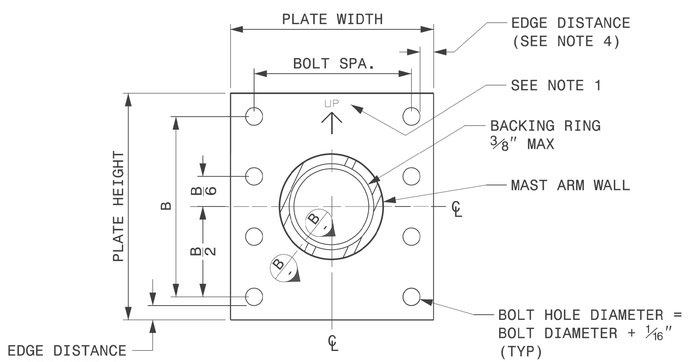

SECTION A-A
MAST ARM ATTACHMENT PLATE

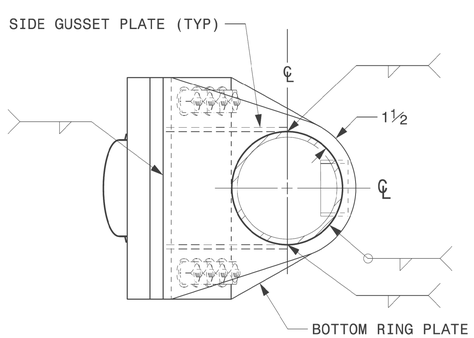

BOTTOM VIEW

Fabrication Details – Mast Arm Connection

Prepared in the Offices of:
Transportation Mobility and Safety Division
Signal Design Section
750 N.Greenfield Pkwy,Garner,NC 27529

SCALE
0 NA
NONE

Typical Fabrication Details
For
Mast Arm Connection To Pole

PLAN DATE:	SEPTEMBER 2023	DESIGNED BY:	C.F. ANDREWS
PREPARED BY:	K.C. DURIGON	REVIEWED BY:	D.C. SARKAR

REVISIONS	INIT.	DATE

SEAL
NORTH CAROLINA PROFESSIONAL SEAL 036626 ENGINEER KEVIN C. DURIGON

DocuSigned by:
Kevin Durigon
SIGNATURE
4B23DC79B3784DA...
09/21/2023
DATE

03-OCT-2023 12:38
S:\MTS&SU\MTS Signals\Signal Design Section\Structures\Drawings\2024 Metal Pole Std Drawings for LRFD\2024 Sig.M5 Std. Connection Fabrication Details-Mast Arm Poles.dgn
kcdurigon

PROJECT I.D. NO.	SHEET NO.
R-2307B	Sig.M6

Fabrication Details – Strain Pole Attachments

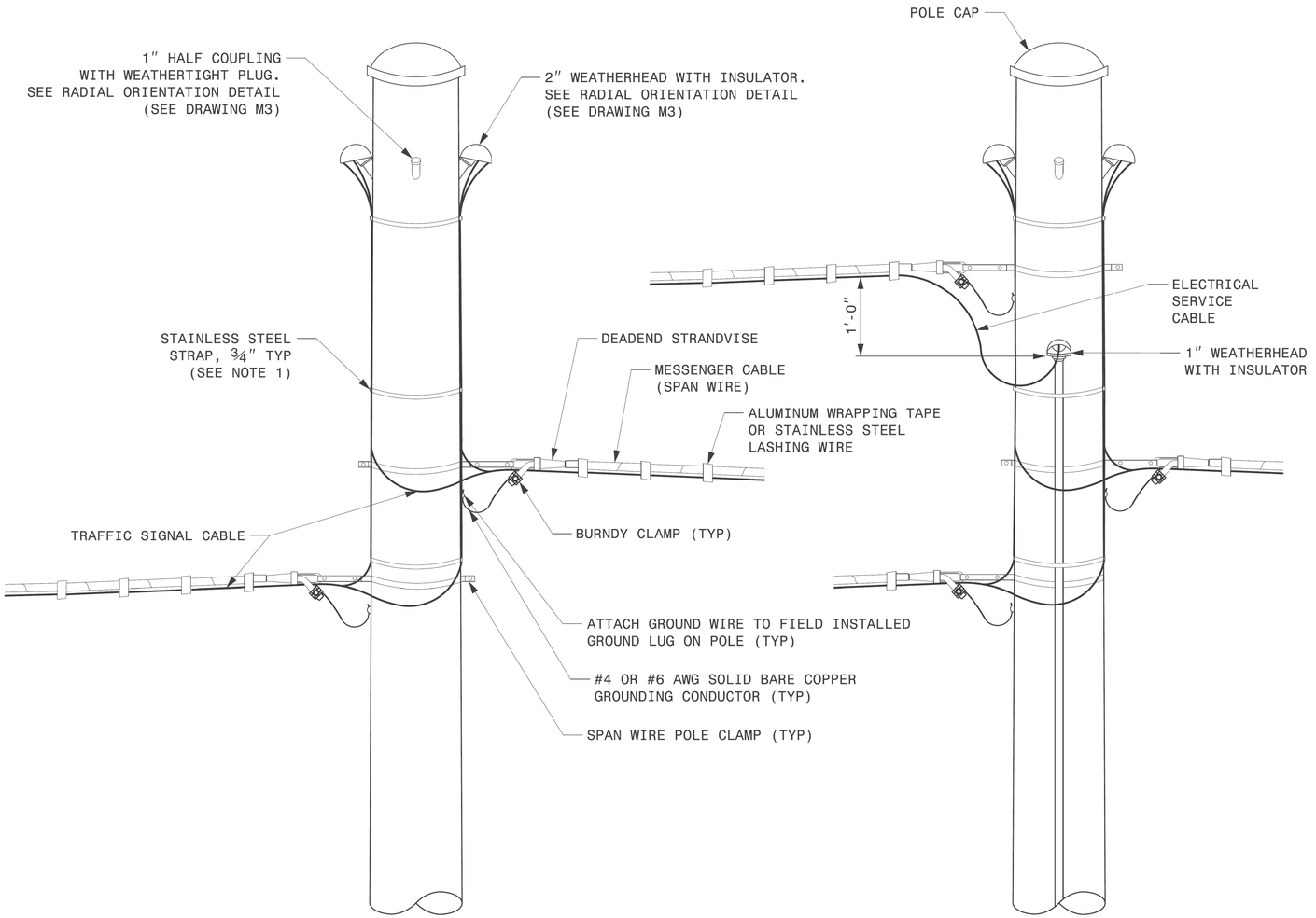

STRAIN POLE ATTACHMENTS

NOTES:

1. STRAP ALL SIGNAL CABLES TO THE SIDE OF THE POLE WITH ¾″ STAINLESS STEEL STRAPS WHEN THE DISTANCE BETWEEN SPAN WIRE ATTACHMENT CLAMP AND WEATHERHEADS EXCEEDS 3′-0″.
2. PROVIDE MINIMUM TWO SPAN WIRE POLE CLAMPS PER POLE.
3. IT IS PROHIBITED TO ATTACH TWO SPAN WIRES AT ONE POLE CLAMP.
4. FOR GENERAL REQUIREMENTS, REFER TO NCDOT STANDARD SPECIFICATIONS FOR ROADWAY AND STRUCTURES, JANUARY 2024.

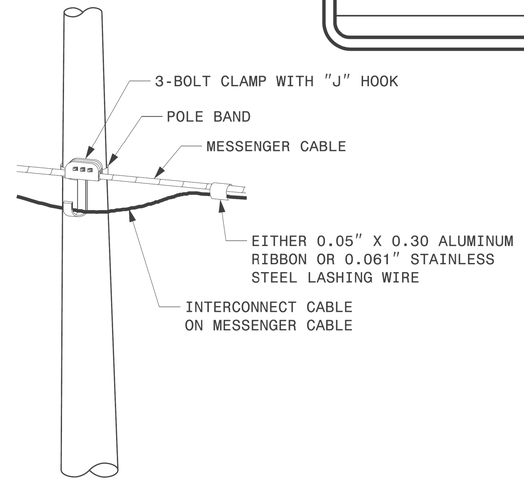

ATTACHMENT OF CABLE TO INTERMEDIATE METAL POLE

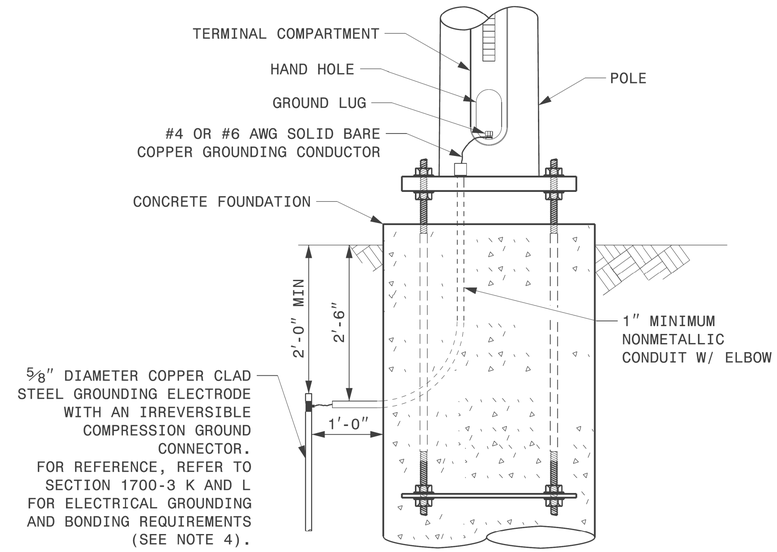

METAL POLE GROUNDING DETAIL FOR STRAIN POLE AND MAST ARM

Prepared In the Offices of:
Transportation Mobility and Safety Division
Traffic Engineering Branch
Signal Design Section
750 N.Greenfield Pkwy,Garner,NC 27529

SCALE
0 NA
NONE

Typical Fabrication Details
For
Strain Pole Attachments

PLAN DATE:	SEPTEMBER 2023	DESIGNED BY:	C.F. ANDREWS
PREPARED BY:	K.C. DURIGON	REVIEWED BY:	D.C. SARKAR

REVISIONS	INIT.	DATE

SEAL
NORTH CAROLINA
PROFESSIONAL
SEAL
036626
ENGINEER
KEVIN C. DURIGON

DocuSigned by:
Kevin Durigon
SIGNATURE
4B23DC79B3784DA...
09/21/2023
DATE

03-OCT-2023 12:11
S:\TITLES\MITS\Signals\Signal Design Section\Structures\Drawings\2024 Metal Pole Std Drawings for LRFD\2024 Sig.M6 Std. Fabrication Details-Strain Poles.dgn
kcdurigon