PROJECT REFERENCE NO.	SHEET NO.
U-5757	Sig.12.2

OVERLAP PROGRAMMING DETAIL FOR DEFAULT PHASING

Front Panel
Main Menu >Controller >Overlap >Overlap Parameters/Overlap Timings

Web Interface
Home >Controller >Overlap Configuration >Overlaps

Overlap Plan 1

Overlap	1	2	3	4
Type	Off	Off	FYA 4 - Section	Normal
Included Phases			6	4,5
Modifier Phases			5	
Modifier Overlaps	-	-	-	
Trail Green	0	0	0	0
Trail Yellow	0.0	0.0	0.0	0.0
Trail Red	0.0	0.0	0.0	0.0

MAXTIME OVERLAP PROGRAMMING DETAIL FOR ALTERNATE PHASING

Front Panel
Main Menu >Controller >Overlap >Overlap Parameters/Overlap Timings

Web Interface
Home >Controller >Overlap Configuration >Overlaps

In the table view of the web interface, right click on "Overlap" in the top left corner of the table. Copy the entire contents of Overlap Plan 1. Paste Overlap Plan 1 into Overlap Plan 2. Modify Overlap Plan 2 as shown below and save changes.

Overlap Plan 2

Overlap	1	2	3	4
Type	Off	Off	FYA 4 - Section	Normal
Included Phases				4,5
Modifier Phases			5	
Modifier Overlaps	-	-	-	
Trail Green	0	0	0	0
Trail Yellow	0.0	0.0	0.0	0.0
Trail Red	0.0	0.0	0.0	0.0

NOTICE REMOVED INCLUDED PHASES

MAXTIME ALTERNATE PHASING PATTERN PROGRAMMING DETAIL

Front Panel
Main Menu >Controller >Coordination >Patterns

Web Interface
Home >Controller >Coordination >Patterns

Pattern Parameters

Pattern	Veh Det Plan	Overlap Plan
*	2	2

* The Pattern number(s) are to be determined by the Division and/or City Traffic Engineer.

Note: If Loop 5A is detected using the Vehicle Detectors shown in the charts below, use the steps shown below. If different Vehicle Detectors are used, substitute the appropriate Vehicle Detector numbers for the ones shown below.

VEHICLE DETECTOR PROGRAMMING DETAIL FOR ALTERNATE PHASING LOOP 5A

Front Panel
Main Menu >Controller >Detector >Veh Det Plans

Web Interface
Home >Controller >Detector Configuration >Vehicle Detectors

In the table view of web interface right click on "Detector" in the top left corner of the table. Copy the entire contents of Detector Plan 1. Paste Detector Plan 1 into Detector Plan 2. Modify Detector Plan 2 as shown below and save changes.

Plan 2

	Detector	Call Phase	Delay
5A	15	5	3.0
	31	0	0.0

MAXTIME ALTERNATE PHASING ACTIVATION DETAIL

To run alternate phasing, select a Pattern that is programmed to run Overlap Plan 2 and Detector Plan 2. A Pattern can be selected through the scheduler or manually by changing the Operational Mode.

PHASING	OVERLAP PLAN	VEH DET PLAN
ACTIVE PLAN REQUIRED TO RUN DEFAULT PHASING	1	1
ACTIVE PLAN REQUIRED TO RUN ALTERNATE PHASING	2	2

ALTERNATE PHASING CHANGE SUMMARY

THE FOLLOWING IS A SUMMARY OF WHAT TAKES PLACE WHEN OVERLAP PLAN 2 AND VEHICLE DETECTOR PLAN 2 ACTIVATE TO CALL THE "ALTERNATE PHASING":

OVERLAP PLAN 2: Modifies overlap included phases for head 51 to run protected turns only.

VEH DET PLAN 2: Disables phase 2 call on loop 5A and reduces delay time for phase 5 call on loop 5A to 3.0 seconds.

Electrical Detail - Sheet 2 of 2

THIS ELECTRICAL DETAIL IS FOR THE SIGNAL DESIGN: 09-0400T1
DESIGNED: May 2024
SEALED: 05-09-2024
REVISED: N/A

TRANSYSTEMS
1 Glenwood Avenue
Raleigh, NC 27603
Tel:919.789.9977
Fax:919.789.9591
License: F-0453

Electrical and Programming Details For:

Prepared for the Offices of:
Transportation Mobility and Safety Division
STATE OF NORTH CAROLINA
DEPARTMENT OF TRANSPORTATION
ITS & Signals Management Section
750 N. Greenfield Pkwy, Garner, NC 27529

NC 8 (Winston Road) at SR 1406 (Biesecker Road)

Division 9 Davidson County Lexington

PLAN DATE:	May 2024	REVIEWED BY:	
PREPARED BY:	J.T. Rowe	REVIEWED BY:	G.G. Murr, Jr.

REVISIONS	INIT.	DATE

DOCUMENT NOT CONSIDERED FINAL UNLESS ALL SIGNATURES COMPLETED

SEAL
NORTH CAROLINA PROFESSIONAL SEAL 008453 ENGINEER JOHN T. ROWE JR.

DATE

SIG. INVENTORY NO. 09-0400T1

5/9/2024
...\09040OT1_sm_ele_2024xxyy.dgn
USER:default

PROJECT REFERENCE NO.	SHEET NO.
U-5757	Sig. 13.0

3 Phase
Fully Actuated
NC 8 (Winston Road) CLS
Signal System #:D09-19_Lexington

DEFAULT PHASING DIAGRAM

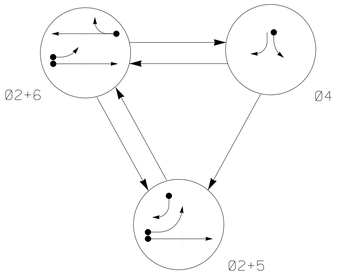

DEFAULT PHASING TABLE OF OPERATION				
SIGNAL FACE	PHASE Ø2+5	PHASE Ø2+6	PHASE Ø4	FLASH
21,22	G	G	R	Y
41	~~R~~	~~R~~	~~R~~	~~R~~
42,43	→	R	→	R
51	←	F Y	~~R~~	~~Y~~
61,62	R	G	R	Y

ALTERNATE PHASING DIAGRAM

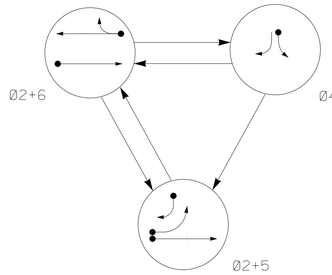

ALTERNATE PHASING TABLE OF OPERATION				
SIGNAL FACE	PHASE Ø2+5	PHASE Ø2+6	PHASE Ø4	FLASH
21,22	G	G	R	Y
41	~~R~~	~~R~~	~~R~~	~~R~~
42,43	→	R	→	R
51	←	~~R~~	~~R~~	~~Y~~
61,62	R	G	R	Y

SIGNAL FACE I.D.

All Heads L.E.D.

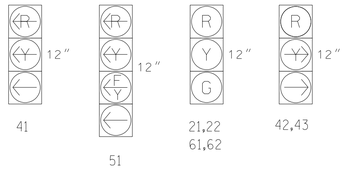

MAXTIME DETECTOR INSTALLATION CHART

DETECTOR					PROGRAMMING							
ZONE	SIZE (FT)	DISTANCE FROM STOP LINE (FT)	TURNS	NEW ZONE	CALL PHASE	DELAY TIME	EXTEND TIME	EXTEND	ADDED INITIAL	CALL	DELAY DURING GREEN	NEW CARD
2A✳	6X6	300	✳	X	2	-	-	X	X	X	-	-
4A✳	6X40	0	✳	X	4	3.0	-	X	-	X	-	-
5A✳	6X40	0	✳	X	5	15.0✳✳	-	X	-	X	-	-
					2#	3.0	-	X	-	X	X	-
5B✳	6X40	0	✳	X	5	15.0	-	X	-	X	-	-
6A✳	6X6	300	✳	X	6	-	-	X	X	X	-	-

✳ Video Detection Zone
✳✳ Reduce delay to 3 sec during alternate phasing operation
\# Disable phase call for loop(s) during alternate phasing operation

NOTES

1. Refer to "Roadway Standard Drawings NCDOT" dated January 2024 and "Standard Specifications for Roads and Structures" dated January 2024.
2. Do not program signal for late night flashing operation unless otherwise directed by the Engineer.
3. Phase 5 may be lagged.
4. Reposition existing signal heads numbered 21,22,51,61 & 62.
5. Set all detector units to presence mode.
6. This intersection uses video detection. Install detectors according to the manufacturer's instructions to achieve the desired detection.
7. The Division Traffic Engineer will determine the hours of use for each phasing plan.
8. Maximum times shown in timing chart are for free-run operation only. Coordinated signal system timing values supersede these values.

PHASING DIAGRAM DETECTION LEGEND

- DETECTED MOVEMENT
- UNDETECTED MOVEMENT (OVERLAP)
- UNSIGNALIZED MOVEMENT
- PEDESTRIAN MOVEMENT

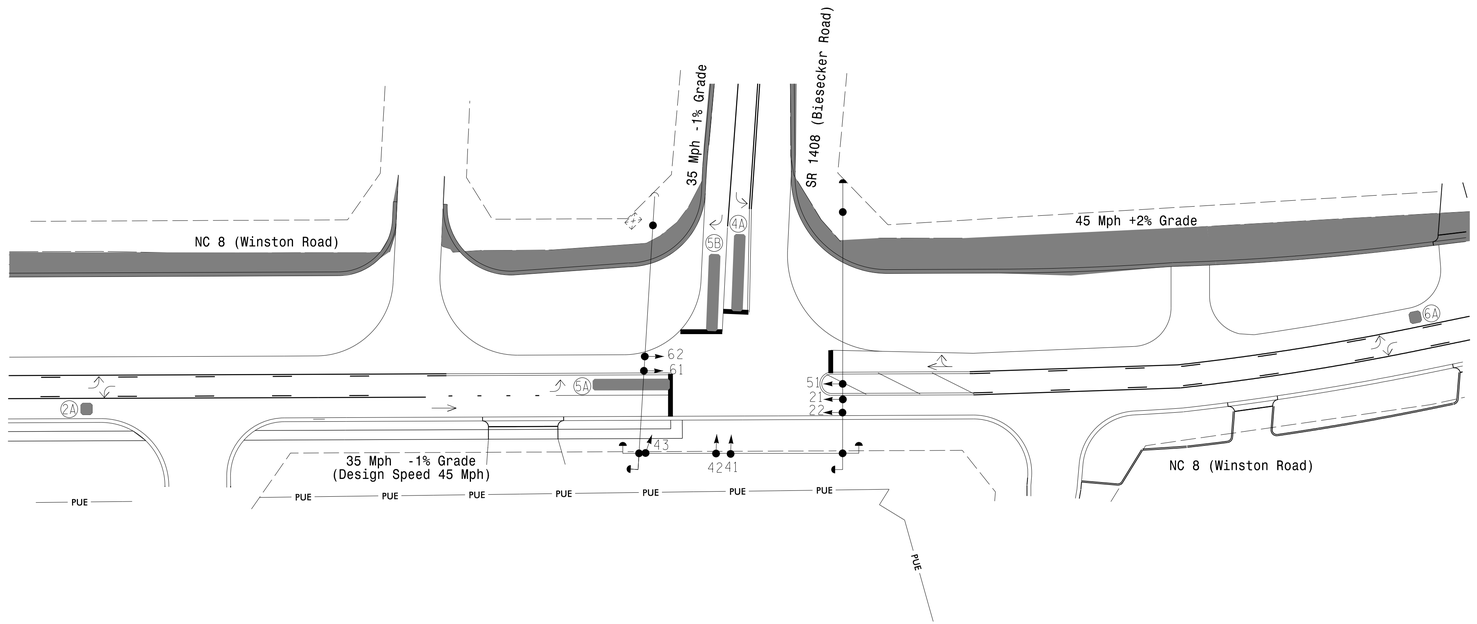

MAXTIME TIMING CHART

FEATURE	PHASE 2	PHASE 4	PHASE 5	PHASE 6
Walk *	–	–	–	–
Ped Clear *	–	–	–	–
Min Green *	12	7	7	12
Passage *	6.0	2.0	2.0	6.0
Max 1 *	35	25	15	35
Yellow Change	4.6	3.0	3.0	4.6
Red Clear	1.1	1.9	1.6	1.1
Added Initial *	2.5	–	–	2.5
Maximum Initial *	34	–	–	34
Time Before Reduction *	15	–	–	15
Time To Reduce *	30	–	–	30
Minimum Gap	3.0	–	–	3.0
Advance Walk	–	–	–	–
Non Lock Detector	–	X	X	–
Vehicle Recall	MIN RECALL	–	–	MIN RECALL
Dual Entry	–	–	–	–

* These values may be field adjusted. Do not adjust Min Green and Extension times for phases 2 and 6 lower than what is shown. Min Green for all other phases should not be lower than 4 seconds.

LEGEND

PROPOSED		EXISTING
○→	Traffic Signal Head	●→
◐→	Modified Signal Head	N/A
⊣	Sign	⊣
□	Pedestrian Signal Head With Push Button & Sign	■
○→	Signal Pole with Guy	●→
○↓	Signal Pole with Sidewalk Guy	●↓
▭	Inductive Loop Detector	▭
⊠	Controller & Cabinet	⊠
□	Junction Box	■
-----	2-in Underground Conduit	-----
N/A	Right of Way	-----
→	Directional Arrow	→
▬	Construction Zone	N/A
▬	Video Detection Zone	▬

Signal Upgrade - Temporary Design 2 (TMP Phase II)

DOCUMENT NOT CONSIDERED FINAL UNLESS ALL SIGNATURES COMPLETED

TRANSYSTEMS
1 Glenwood Avenue
Raleigh, NC 27603
Tel:919.789.9977
Fax:919.789.9591
License: F-0453

Prepared for the Offices of:
Transportation Mobility and Safety Division
THE STATE OF NORTH CAROLINA DEPARTMENT OF TRANSPORTATION
Signal Design Section
750 N.Greenfield Pkwy.Garner,NC 27529

NC 8 (Winston Road)
at
SR 1406 (Biesecker Road)

Division 9 Davidson County Lexington

PLAN DATE: May 2024 REVIEWED BY: G.G. Murr, Jr.
PREPARED BY: B.E. Wynn REVIEWED BY:

SCALE 0 40 1"=40'

REVISIONS	INIT.	DATE

SEAL
NORTH CAROLINA PROFESSIONAL SEAL 14543 ENGINEER GLENN G. MURR, JR.

SIGNATURE DATE

SIG. INVENTORY NO. 09-0400T2

5/9/2024
09-0400T2_sig_dsn_2022xxxx.dgn
USER:default

PROJECT REFERENCE NO.	SHEET NO.
U-5757	Sig.13.1

16 CHANNEL CONFLICT MONITOR PROGRAMMING DETAIL

(remove jumpers and set switches as shown)

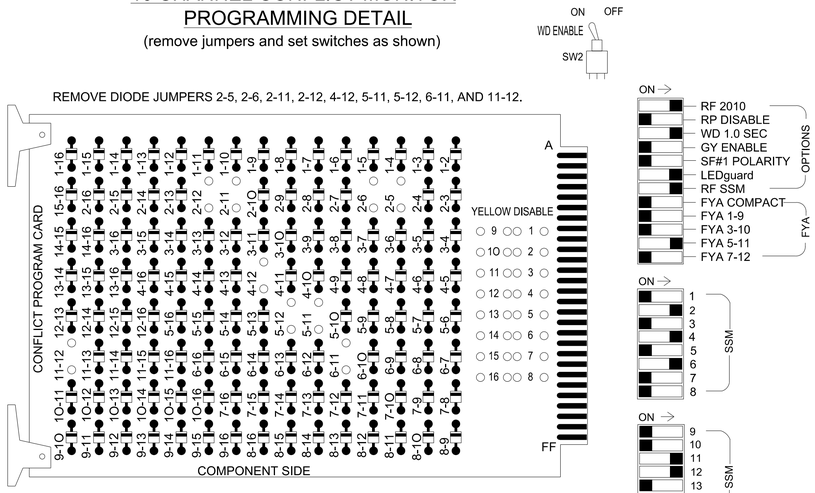

REMOVE JUMPERS AS SHOWN

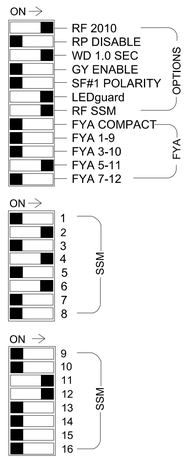

NOTES:
1. Card is provided with all diode jumpers in place. Removal of any jumper allows its channels to run concurrently.
2. Make sure jumpers SEL2-SEL5 are present on the monitor board.

NOTES

1. To prevent "flash-conflict" problems, insert red flash program blocks for all unused vehicle load switches in the output file. The installer shall verify that signal heads flash in accordance with the signal plan.
2. Ensure that Red Enable is active at all times during normal operation. To prevent red failures on unused monitor channels, tie unused red monitor inputs 1,3,5,7,8,9, 10,13,14,15 and 16 to AC+ per the cabinet manufacturer's instructions.
3. Program controller to start up in phase 2 Green No Walk and 6 Green No Walk.
4. If this signal will be managed by an ATMS software, enable controller and detector logging for all detectors used at this location.
5. The cabinet and controller are part of the NC 8 (Winston Road) Closed Loop System (Signal System D09-19 Lexington).

EQUIPMENT INFORMATION

Controller.....2070LX
Cabinet.....332 w/ Aux
Software.....Q-Free MAXTIME
Cabinet Mount.....Base
Output File Positions.....18 With Aux. Output File
Load Switches Used.....S2, S4, S5, S6, S12, S13
Phases Used.....2, 4, 5, 6
Overlap "1".....Not Used
Overlap "2".....Not Used
Overlap "3".....*
Overlap "4".....*

*See overlap programming detail on sheet 2

SIGNAL HEAD HOOK-UP CHART

LOAD SWITCH NO.	S1	S2	S2P	S3	S4	S4P	S5	S6	S6P	S7	S8	S8P	S9	S10	S11	S12	S13	S14
CMU CHANNEL NO.	1	2	13	3	4	14	5	6	15	7	8	16	9	10	17	11	12	18
PHASE	1	2	2 PED	3	4	4 PED	5	6	6 PED	7	8	8 PED	OL1	OL2	SPARE	OL3	OL4	SPARE
SIGNAL HEAD NO.	NU	21,22	NU	NU	41	NU	51★	61,62	NU	NU	NU	NU	NU	NU	NU	51★	42,43	NU
RED		128						134									A101	
YELLOW		129					*	135										
GREEN		130						136										
RED ARROW					101											A114		
YELLOW ARROW					102											A115	A102	
FLASHING YELLOW ARROW																A116		
GREEN ARROW					103		133										A103	

NU = Not Used
*Denotes install load resistor. See load resistor installation detail this sheet.
★See pictorial of head wiring in detail this sheet.

FYA SIGNAL WIRING DETAIL

(wire signal heads as shown)

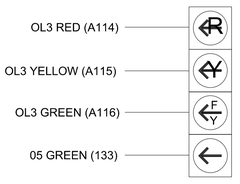

INPUT FILE POSITION LAYOUT

(front view)

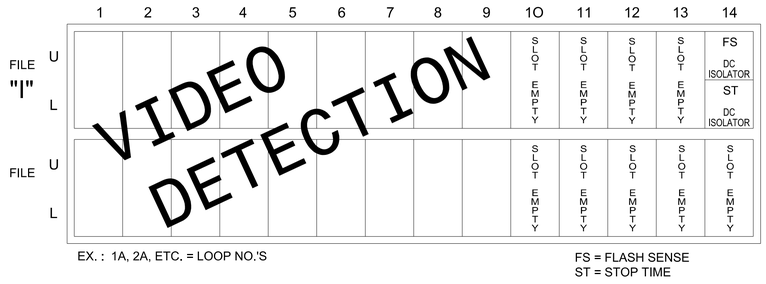

SPECIAL DETECTOR NOTE

Install a video detection system for vehicle detection. Perform installation according to manufacturer's directions and NCDOT engineer approved mounting locations to accomplish the detection schemes shown on the Signal Design Plans.

For zone 5A, inputs associated with the typical NCDOT installation slots are compatible with time of day instructions located on sheet 2.

Note: For the detectors to work as shown on the signal design plan, see the Vehicle Detector Programming Detail for Alternate Phasing Loop 5A on sheet 2.

LOAD RESISTOR INSTALLATION DETAIL

(install resistors as shown)

ACCEPTABLE VALUES	
Value (ohms)	Wattage
1.5K - 1.9K	25W (min)
2.0K - 3.0K	10W (min)

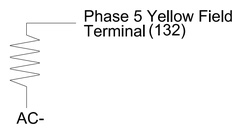

FLASHER CIRCUIT MODIFICATION DETAIL

IN ORDER TO INSURE THAT SIGNALS FLASH CONCURRENTLY ON THE SAME APPROACH, MAKE THE FOLLOWING FLASHER CIRCUIT CHANGES:

1. ON REAR OF PDA - REMOVE WIRE FROM TERM. T2-4 AND TERMINATE ON T2-2.
2. ON REAR OF PDA - REMOVE WIRE FROM TERM. T2-5 AND TERMINATE ON T2-3.
3. REMOVE FLASHER UNIT 2.

THE CHANGES LISTED ABOVE TIES ALL PHASES AND OVERLAPS TO FLASHER UNIT 1.

THIS ELECTRICAL DETAIL IS FOR
THE SIGNAL DESIGN: 09-0400T2
DESIGNED: May 2024
SEALED: 05-09-2024
REVISED: N/A

Electrical Detail - Sheet 1 of 2

DOCUMENT NOT CONSIDERED FINAL UNLESS ALL SIGNATURES COMPLETED

TRANSYSTEMS
1 Glenwood Avenue
Raleigh, NC 27603
Tel:919.789.9977
Fax:919.789.9591
License: F-0453

Electrical and Programming Details For:

Prepared for the Offices of:
Transportation Mobility and Safety Division
STATE OF NORTH CAROLINA DEPARTMENT OF TRANSPORTATION
ITS & Signals Management Section
750 N. Greenfield Pkwy, Garner, NC 27529

NC 8 (Winston Road)
at
SR 1406 (Biesecker Road)

Division 9 | Davidson County | Lexington

PLAN DATE:	May 2024	REVIEWED BY:	
PREPARED BY:	J.T. Rowe	REVIEWED BY:	G.G. Murr, Jr.

REVISIONS	INIT.	DATE

SEAL
NORTH CAROLINA
PROFESSIONAL
SEAL
008453
ENGINEER
JOHN T ROWE, III

DATE

SIG. INVENTORY NO. 09-0400T2

5/9/2024
c:\projects\0400T2_sm.e1a.2024xxyy.dgn
USER:default

PROJECT REFERENCE NO.	SHEET NO.
U-5757	Sig.13.2

OVERLAP PROGRAMMING DETAIL FOR DEFAULT PHASING

Front Panel
Main Menu >Controller >Overlap >Overlap Parameters/Overlap Timings

Web Interface
Home >Controller >Overlap Configuration >Overlaps

Overlap Plan 1

Overlap	1	2	3	4
Type	Off	Off	FYA 4 - Section	Normal
Included Phases			6	4,5
Modifier Phases			5	
Modifier Overlaps	-	-	-	
Trail Green	0	0	0	0
Trail Yellow	0.0	0.0	0.0	0.0
Trail Red	0.0	0.0	0.0	0.0

MAXTIME OVERLAP PROGRAMMING DETAIL FOR ALTERNATE PHASING

Front Panel
Main Menu >Controller >Overlap >Overlap Parameters/Overlap Timings

Web Interface
Home >Controller >Overlap Configuration >Overlaps

In the table view of the web interface, right click on "Overlap" in the top left corner of the table. Copy the entire contents of Overlap Plan 1. Paste Overlap Plan 1 into Overlap Plan 2. Modify Overlap Plan 2 as shown below and save changes.

Overlap Plan 2

Overlap	1	2	3	4
Type	Off	Off	FYA 4 - Section	Normal
Included Phases				4,5
Modifier Phases			5	
Modifier Overlaps	-	-	-	
Trail Green	0	0	0	0
Trail Yellow	0.0	0.0	0.0	0.0
Trail Red	0.0	0.0	0.0	0.0

← NOTICE REMOVED INCLUDED PHASES

MAXTIME ALTERNATE PHASING PATTERN PROGRAMMING DETAIL

Front Panel
Main Menu >Controller >Coordination >Patterns

Web Interface
Home >Controller >Coordination >Patterns

Pattern Parameters

Pattern	Veh Det Plan	Overlap Plan
*	2	2

*The Pattern number(s) are to be determined by the Division and/or City Traffic Engineer.

Note: If Loop 5A is detected using the Vehicle Detectors shown in the charts below, use the steps shown below. If different Vehicle Detectors are used, substitute the appropriate Vehicle Detector numbers for the ones shown below.

VEHICLE DETECTOR PROGRAMMING DETAIL FOR ALTERNATE PHASING LOOP 5A

Front Panel
Main Menu >Controller >Detector >Veh Det Plans

Web Interface
Home >Controller >Detector Configuration >Vehicle Detectors

In the table view of web interface right click on "Detector" in the top left corner of the table. Copy the entire contents of Detector Plan 1. Paste Detector Plan 1 into Detector Plan 2. Modify Detector Plan 2 as shown below and save changes.

Plan 2

5A

Detector	Call Phase	Delay
15	5	3.0
31	0	0.0

MAXTIME ALTERNATE PHASING ACTIVATION DETAIL

To run alternate phasing, select a Pattern that is programmed to run Overlap Plan 2 and Detector Plan 2. A Pattern can be selected through the scheduler or manually by changing the Operational Mode.

PHASING	OVERLAP PLAN	VEH DET PLAN
ACTIVE PLAN REQUIRED TO RUN DEFAULT PHASING	1	1
ACTIVE PLAN REQUIRED TO RUN ALTERNATE PHASING	2	2

ALTERNATE PHASING CHANGE SUMMARY

THE FOLLOWING IS A SUMMARY OF WHAT TAKES PLACE WHEN OVERLAP PLAN 2 AND VEHICLE DETECTOR PLAN 2 ACTIVATE TO CALL THE "ALTERNATE PHASING":

OVERLAP PLAN 2: Modifies overlap included phases for head 51 to run protected turns only.

VEH DET PLAN 2: Disables phase 2 call on loop 5A and reduces delay time for phase 5 call on loop 5A to 3.0 seconds.

Electrical Detail - Sheet 2 of 2

DOCUMENT NOT CONSIDERED FINAL UNLESS ALL SIGNATURES COMPLETED

THIS ELECTRICAL DETAIL IS FOR
THE SIGNAL DESIGN: 09-0400T2
DESIGNED: May 2024
SEALED: 05-09-2024
REVISED: N/A

TRANSYSTEMS
1 Glenwood Avenue
Raleigh, NC 27603
Tel:919.789.9977
Fax:919.789.9591
License: F-0453

Electrical and Programming Details For:

Prepared for the Offices of:
Transportation Mobility and Safety Division
NORTH CAROLINA DEPARTMENT OF TRANSPORTATION
Traffic Engineering & Signals Management Section
750 N. Greenfield Pkwy, Garner, NC 27529

NC 8 (Winston Road)
at
SR 1406 (Biesecker Road)

Division 9 | Davidson County | Lexington

PLAN DATE:	May 2024	REVIEWED BY:	
PREPARED BY:	J.T. Rowe	REVIEWED BY:	G.G. Murr, Jr.

REVISIONS	INIT.	DATE

SEAL
NORTH CAROLINA PROFESSIONAL SEAL 008453 ENGINEER JOHN T. ROWE, JR.

DATE

SIG. INVENTORY NO. 09-0400T2

5/9/2024
09-0400T2_sm_ele_2024xxyy.dgn
USER:default

PROJECT REFERENCE NO.	SHEET NO.
U-5757	Sig. 14.0

DEFAULT PHASING DIAGRAM

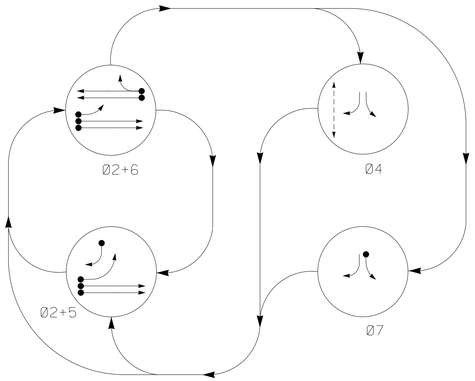

DEFAULT PHASING TABLE OF OPERATION

SIGNAL FACE	PHASE Ø2+5	Ø2+6	Ø4	Ø7	FLASH
21,22	G	G	R	R	Y
41,42	→	R	F Y	→	R
51	←	F Y	~~R~~	~~R~~	~~Y~~
61,62	R	G	R	R	Y
71	~~R~~	~~R~~	←	←	~~R~~
P41,P42	DW	DW	W	DW	DRK

ALTERNATE PHASING DIAGRAM

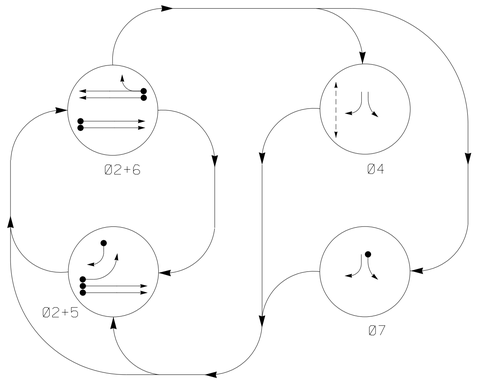

ALTERNATE PHASING TABLE OF OPERATION

SIGNAL FACE	PHASE Ø2+5	Ø2+6	Ø4	Ø7	FLASH
21,22	G	G	R	R	Y
41,42	→	R	F Y	→	R
51	←	~~R~~	~~R~~	~~R~~	~~Y~~
61,62	R	G	R	R	Y
71	~~R~~	~~R~~	←	←	~~R~~
P41,P42	DW	DW	W	DW	DRK

MAXTIME DETECTOR INSTALLATION CHART

DETECTOR LOOP	SIZE (FT)	DISTANCE FROM STOP LINE (FT)	TURNS	NEW LOOP	PROGRAMMING CALL PHASE	DELAY TIME	EXTEND TIME	EXTEND	ADDED INITIAL	CALL	DELAY DURING GREEN	NEW CARD
2A	6X6	300	5	X	2	-	-	X	X	X	-	X
2B	6X6	300	5	X	2	-	-	X	X	X	-	X
5A	6X40	0	2-4-2	X	5	15.0**	-	X	-	X	-	X
					2#	3.0	-	X	-	X	X	X
5B	6X40	0	2-4-2	X	5	15.0	-	X	-	X	-	X
6A	6X6	300	5	X	6	-	-	X	X	X	-	X
6B	6X6	300	5	X	6	-	-	X	X	X	-	X
7A	6X40	0	2-4-2	X	7	3.0	-	X	-	X	-	X

** Disable delay during alternate phasing operation
# Disable phase call for loop(s) during alternate phasing operation

3 Phase Fully Actuated NC 8 (Winston Road) CLS Signal System #:D09-19_Lexington

NOTES

1. Refer to "Roadway Standard Drawings NCDOT" dated January 2024 and "Standard Specifications for Roads and Structures" dated January 2024.
2. Do not program signal for late night flashing operation unless otherwise directed by the Engineer.
3. Omit Phase 7 during phase 4 on.
4. Phase 5 may be lagged.
5. Set all detector units to presence mode.
6. Locate new cabinet so as not to obstruct sight distance of vehicles turning right on red.
7. Omit "WALK" and flashing "DON'T WALK" with no pedestrian calls.
8. Program pedestrian heads to countdown the flashing "Don't Walk" time only.
9. The Division Traffic Engineer will determine the hours of use for each phasing plan.
10. Maximum times shown in timing chart are for free-run operation only. Coordinated signal system timing values supersede these values.
11. To provide a Leading Pedestrian Interval on the Phase 4 right turn, program FYA heads 41 and 42 to delay for 6 seconds after start of the Phase 4 Walk Interval.
12. Traffic Signal Heads and Pedestal Posts will be black color treated. The selected shade of black must be verified and approved by the Engineer and City of Lexington prior to ordering.
13. Relocate 2070LX controller installed in Temporary Design 1.

SIGNAL FACE I.D.

All Heads L.E.D.

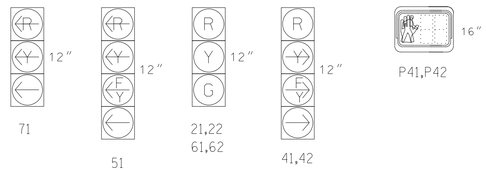

PHASING DIAGRAM DETECTION LEGEND

- DETECTED MOVEMENT
- UNDETECTED MOVEMENT (OVERLAP)
- UNSIGNALIZED MOVEMENT
- PEDESTRIAN MOVEMENT

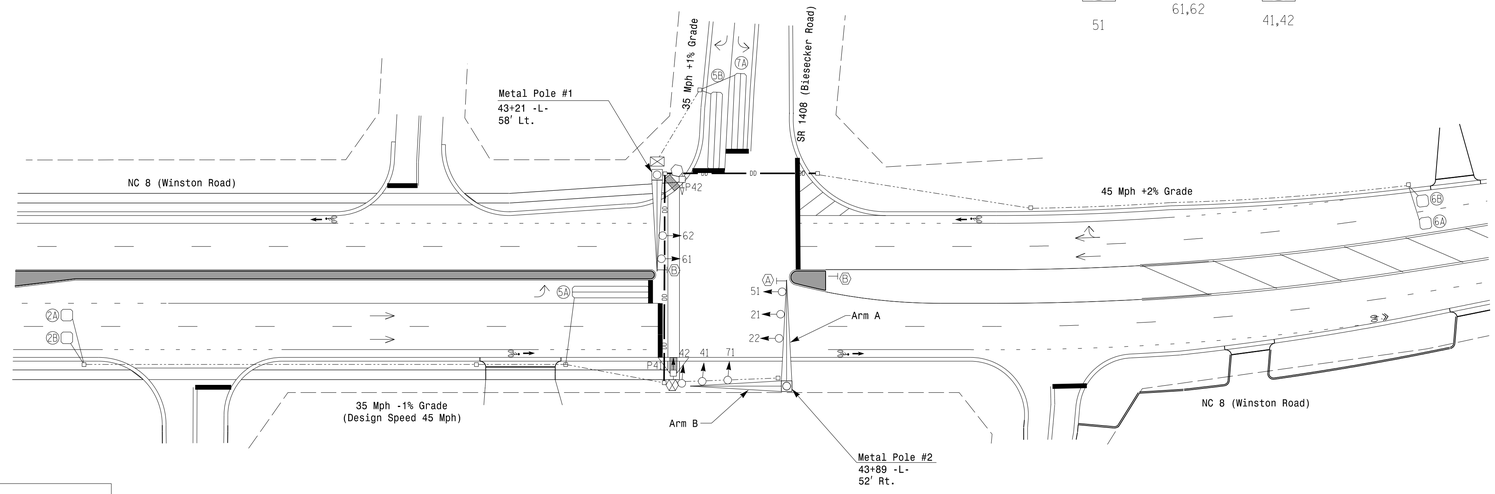

MAXTIME TIMING CHART

FEATURE	PHASE 2	4	5	6	7
Walk *	–	7	–	–	–
Ped Clear *	–	22	–	–	–
Min Green *	12	7	7	12	7
Passage *	6.0	2.0	2.0	6.0	2.0
Max 1 *	60	25	15	60	25
Yellow Change	4.6	3.0	3.0	4.6	3.0
Red Clear	1.2	2.9	2.4	1.2	2.9
Added Initial *	1.5	–	–	1.5	–
Maximum Initial *	34	–	–	34	–
Time Before Reduction *	15	–	–	15	–
Time To Reduce *	30	–	–	30	–
Minimum Gap	3.0	–	–	3.0	–
Advance Walk	–	##	–	–	–
Non Lock Detector	–	X	X	–	X
Vehicle Recall	MIN RECALL	–	–	MIN RECALL	–
Dual Entry	–	–	–	–	–

* These values may be field adjusted. Do not adjust Min Green and Extension times for phases 2 and 6 lower than what is shown. Min Green for all other phases should not be lower than 4 seconds.

See Note 11

SIGNS

- (A) "U-TURN YIELD TO RIGHT TURN" Sign (R10-16)
- (B) No U-Turn/No Left Turn Sign (R3-18)

LEGEND

PROPOSED		EXISTING
	Traffic Signal Head	
	Modified Signal Head	N/A
	Sign	
	Pedestrian Signal Head With Push Button & Sign	
	Signal Pole with Guy	
	Signal Pole with Sidewalk Guy	
	Inductive Loop Detector	
	Controller & Cabinet	
	Junction Box	
	2-in Underground Conduit	
DD	Directional Drill	N/A
N/A	Right of Way	
	Directional Arrow	
	Metal Pole with Mastarm	
	Type II Signal Pedestal	
	Type III Signal Pedestal	

Signal Upgrade - Final Design

DOCUMENT NOT CONSIDERED FINAL UNLESS ALL SIGNATURES COMPLETED

Prepared for the Offices of:
Transportation Mobility and Safety Division
STATE OF NORTH CAROLINA DEPARTMENT OF TRANSPORTATION
Signal Design Section
750 N.Greenfield Pkwy.Garner,NC 27529

NC 8 (Winston Road) at SR 1406 (Biesecker Road)

Division 9 Davidson County Lexington

PLAN DATE: May 2024 REVIEWED BY: G.G. Murr, Jr.

PREPARED BY: B.E. Wynn REVIEWED BY:

SCALE 0 40 1"=40'

REVISIONS	INIT.	DATE

SEAL
NORTH CAROLINA PROFESSIONAL SEAL 14543 ENGINEER GENE G. MURR, JR.

SIGNATURE DATE

SIG. INVENTORY NO. 09-0400

TRANSYSTEMS
1 Glenwood Avenue
Raleigh, NC 27603
Tel:919.789.9977
Fax:919.789.9591
License: F-0453

5/9/2024
C:\Projects\D09_sig_dsn_2022\xxxx.dgn
USER:default

PROJECT REFERENCE NO.	SHEET NO.
U-5757	Sig.14.1

18 CHANNEL CONFLICT MONITOR PROGRAMMING DETAIL

(remove jumpers and set switches as shown)

REMOVE DIODE JUMPERS 2-5, 2-6, 2-7, 2-11, 2-12, 4-7, 4-12, 4-14, 5-7, 5-11, 5-12, 6-11, 7-11, 7-12, 11-12, AND 12-14.

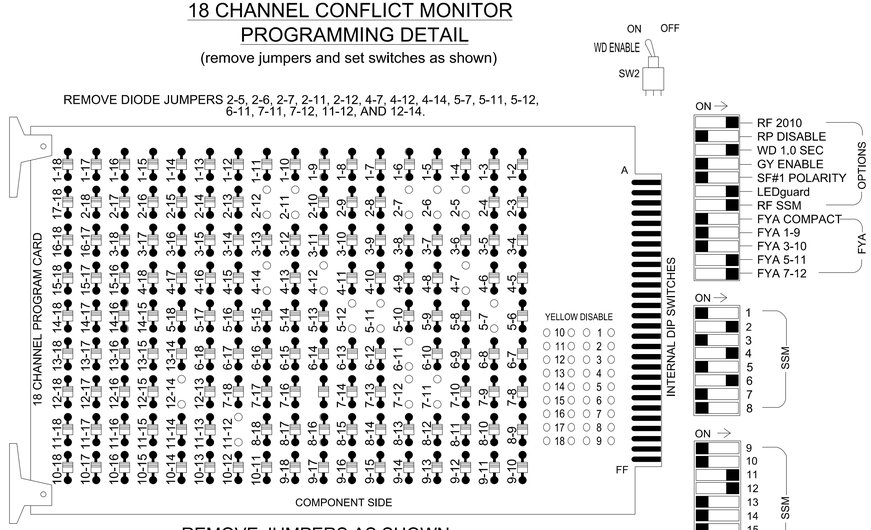

REMOVE JUMPERS AS SHOWN

NOTES:

1. Card is provided with all diode jumpers in place. Removal of any jumper allows its channels to run concurrently.
2. Ensure jumpers SEL2-SEL5 and SEL9 are present on the monitor board.
3. Ensure that the Red Enable is active at all times during normal operation.
4. Connect serial cable from conflict monitor to comm. port 1 of 2070 controller. Ensure conflict monitor communicates with 2070.

NOTES

1. To prevent "flash-conflict" problems, insert red flash program blocks for all unused vehicle load switches in the output file. The installer shall verify that signal heads flash in accordance with the signal plan.
2. Program controller to start up in phase 2 Green No Walk and 6 Green No Walk.
3. If this signal will be managed by an ATMS software, enable controller and detector logging for all detectors used at this location.
4. The cabinet and controller are part of the NC 8 (Winston Road) Closed Loop System (Signal System D09-19 Lexington).

EQUIPMENT INFORMATION

Controller.....2070LX
Cabinet.....332 w/ Aux
Software.....Q-Free MAXTIME
Cabinet Mount.....Base
Output File Positions.....18 With Aux. Output File
Load Switches Used.....S2, S5, S6, S7, S8, S10, AUX S4, AUX S5
Phases Used.....2, 4*, 4PED, 5, 6, 7*
Overlap "1".....Not Used
Overlap "2".....Not Used
Overlap "3".....**
Overlap "4".....**
Overlap "7".....**
Overlap "8".....**

*Timing Purposes only.
**See overlap programming detail on sheet 2.

SIGNAL HEAD HOOK-UP CHART

LOAD SWITCH NO.	S1	S2	S3	S4	S5	S6	S7	S8	S9	S10	S11	S12	AUX S1	AUX S2	AUX S3	AUX S4	AUX S5	AUX S6
CMU CHANNEL NO.	1	2	13	3	4	14	5	6	15	7	8	16	9	10	17	11	12	18
PHASE	1	2	2 PED	3	OL8	4 PED	5	6	6 PED	OL7	8	8 PED	OL1	OL2	SPARE	OL3	OL4	SPARE
SIGNAL HEAD NO.	NU	21,22	NU	NU	71	P41, P42	51 ★	61,62	NU	41,42 ★★	NU	NU	NU	NU	NU	51 ★	41,42 ★★	NU
RED		128						134									A101	
YELLOW		129					*	135		*								
GREEN		130						136										
RED ARROW					101											A114		
YELLOW ARROW					102											A115	A102	
FLASHING YELLOW ARROW																A116	A103	
GREEN ARROW					103		133			124								
✋						104												
🚶						106												

NU = Not Used

* Denotes install load resistor. See load resistor installation detail this sheet.

★See pictorial of head wiring in detail this sheet.

INPUT FILE POSITION LAYOUT

(front view)

		1	2	3	4	5	6	7	8	9	10	11	12	13	14
FILE "I"	U	SLOT EMPTY	∅ 2 2A	SLOT EMPTY	SLOT EMPTY	SLOT EMPTY	SLOT EMPTY	SLOT EMPTY	SLOT EMPTY	SLOT EMPTY	SLOT EMPTY	SLOT EMPTY	NOT USED	SLOT EMPTY	FS DC ISOLATOR
	L		∅ 2 2B										∅ 4 PED DC ISOLATOR		ST DC ISOLATOR
FILE "J"	U	∅ 5 5A	∅ 5 5B	∅ 6 6A	SLOT EMPTY	∅ 7 7A	SLOT EMPTY	SLOT EMPTY	SLOT EMPTY	SLOT EMPTY	SLOT EMPTY	SLOT EMPTY	SLOT EMPTY	SLOT EMPTY	SLOT EMPTY
	L	NOT USED	NOT USED	∅ 6 6B		NOT USED									

EX. : 1A, 2A, ETC. = LOOP NO.'S

FS = FLASH SENSE
ST = STOP TIME

INPUT FILE CONNECTION & PROGRAMMING CHART

LOOP NO.	LOOP TERMINAL	INPUT FILE POS.	PIN NO.	INPUT POINT	DETECTOR NO.	CALL PHASE	DELAY TIME	EXTEND TIME	EXTEND	ADDED INITIAL	CALL	DELAY DURING GREEN
2A	TB2-5,6	I2U	39	1	2	2			X	X	X	
2B	TB2-7,8	I2L	43	5	3	2			X	X	X	
5A	TB3-1,2	J1U	55	17	15 ★	5	15.0		X		X	
				-	31 ★	2	3.0		X		X	X
5B	TB3-5,6	J2U	40	2	16	5	15.0		X		X	
6A	TB3-9,10	J3U	64	30	18	6			X	X	X	
6B	TB3-11,12	J3L	77	43	19	6			X	X	X	
7A	TB5-5,6	J5U	57	19	21	7	3.0		X		X	
PED PUSH BUTTONS												
P41,P42	TB8-5,6	I12L	69	35	4	PED 4						

NOTE:
INSTALL DC ISOLATORS IN INPUT FILE SLOT I12.

★ For the detectors to work as shown on the signal design plan, see the Vehicle Detector Programming Detail for Alternate Phasing Loop 5A on sheet 2.

INPUT FILE POSITION LEGEND: J2L
FILE J
SLOT 2
LOWER

FYA SIGNAL WIRING DETAIL

(wire signal heads as shown)

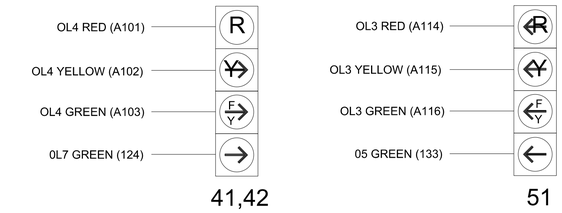

LOAD RESISTOR INSTALLATION DETAIL

(install resistors as shown)

ACCEPTABLE VALUES	
Value (ohms)	Wattage
1.5K - 1.9K	25W (min)
2.0K - 3.0K	10W (min)

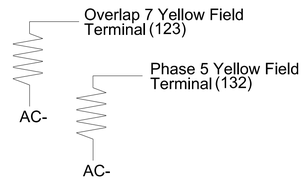

FLASHER CIRCUIT MODIFICATION DETAIL

IN ORDER TO INSURE THAT SIGNALS FLASH CONCURRENTLY ON THE SAME APPROACH, MAKE THE FOLLOWING FLASHER CIRCUIT CHANGES:

1. ON REAR OF PDA - REMOVE WIRE FROM TERM. T2-4 AND TERMINATE ON T2-2.
2. ON REAR OF PDA - REMOVE WIRE FROM TERM. T2-5 AND TERMINATE ON T2-3.
3. REMOVE FLASHER UNIT 2.

THE CHANGES LISTED ABOVE TIES ALL PHASES AND OVERLAPS TO FLASHER UNIT 1.

COUNTDOWN PEDESTRIAN SIGNAL OPERATION

Countdown Ped Signals are required to display timing only during Ped Clearance Interval. Consult Ped Signal Module user's manual for instructions on selecting this feature.

THIS ELECTRICAL DETAIL IS FOR
THE SIGNAL DESIGN: 09-0400
DESIGNED: May 2024
SEALED: 05-09-2024
REVISED: N/A

Electrical Detail - Sheet 1 of 3

DOCUMENT NOT CONSIDERED FINAL UNLESS ALL SIGNATURES COMPLETED

Electrical and Programming Details For:

NC 8 (Winston Road)
at
SR 1406 (Biesecker Road)

Division 9 | Davidson County | Lexington

PLAN DATE:	May 2024	REVIEWED BY:	
PREPARED BY:	J.T. Rowe	REVIEWED BY:	G.G. Murr, Jr.

REVISIONS	INIT.	DATE

Prepared for the Offices of:
Transportation Mobility and Safety Division
NORTH CAROLINA DEPARTMENT OF TRANSPORTATION
ITS & Signals Management Section
750 N. Greenfield Pkwy, Garner, NC 27529

TRANSYSTEMS
1 Glenwood Avenue
Raleigh, NC 27603
Tel:919.789.9977
Fax:919.789.9591
License: F-0453

SEAL
NORTH CAROLINA PROFESSIONAL ENGINEER
SEAL 008453
JOHN T ROWE JR.
DATE

SIG. INVENTORY NO. 09-0400

5/9/2024
09-0400_sht_ele_2024xxyy.dgn
USER:rdtout

PROJECT REFERENCE NO.	SHEET NO.
U-5757	Sig.14.2

OVERLAP PROGRAMMING DETAIL FOR DEFAULT PHASING

Front Panel
Main Menu >Controller >Overlap >Overlap Parameters/Overlap Timings

Web Interface
Home >Controller >Overlap Configuration >Overlaps

Overlap Plan 1

Overlap	1	2	3	4	7	8
Type	Off	Off	FYA 4 - Section	FYA 4 - Section	Normal	Normal
Included Phases			6	4	5,7	4,7
Modifier Phases			5			
Modifier Overlaps	-	-	-	7		
Trail Green	0	0	0	0	0	0
Trail Yellow	0.0	0.0	0.0	0.0	0.0	0.0
Trail Red	0.0	0.0	0.0	0.0	0.0	0.0
FYA Ped Delay	0.0	0.0	0.0	6.0	0.0	0.0

MAXTIME OVERLAP PROGRAMMING DETAIL FOR ALTERNATE PHASING

Front Panel
Main Menu >Controller >Overlap >Overlap Parameters/Overlap Timings

Web Interface
Home >Controller >Overlap Configuration >Overlaps

In the table view of the web interface, right click on "Overlap" in the top left corner of the table. Copy the entire contents of Overlap Plan 1. Paste Overlap Plan 1 into Overlap Plan 2. Modify Overlap Plan 2 as shown below and save changes.

Overlap Plan 2

Overlap	1	2	3	4	7	8
Type	Off	Off	FYA 4 - Section	FYA 4 - Section	Normal	Normal
Included Phases				4	5,7	4,7
Modifier Phases			5			
Modifier Overlaps	-	-	-	7		
Trail Green	0	0	0	0	0	0
Trail Yellow	0.0	0.0	0.0	0.0	0.0	0.0
Trail Red	0.0	0.0	0.0	0.0	0.0	0.0
FYA Ped Delay	0.0	0.0	0.0	6.0	0.0	0.0

NOTICE REMOVED INCLUDED PHASES

MAXTIME ALTERNATE PHASING PATTERN PROGRAMMING DETAIL

Front Panel
Main Menu >Controller >Coordination >Patterns

Web Interface
Home >Controller >Coordination >Patterns

Pattern Parameters

Pattern	Veh Det Plan	Overlap Plan
*	2	2

* The Pattern number(s) are to be determined by the Division and/or City Traffic Engineer.

VEHICLE DETECTOR PROGRAMMING DETAIL FOR ALTERNATE PHASING LOOP 5A

Front Panel
Main Menu >Controller >Detector >Veh Det Plans

Web Interface
Home >Controller >Detector Configuration >Vehicle Detectors

In the table view of web interface right click on "Detector" in the top left corner of the table. Copy the entire contents of Detector Plan 1. Paste Detector Plan 1 into Detector Plan 2. Modify Detector Plan 2 as shown below and save changes.

Plan 2

5A

Detector	Call Phase	Delay
15	5	0.0
31	0	0.0

OUTPUT CHANNEL CONFIGURATION

Front Panel
Main Menu >Controller >More>Channels>Channels Config

Web Interface
Home >Controller >Advanced IO>Channels>Channels Configuration

Channel Configuration

NOTE CHANGE →
NOTE CHANGE →

Channel	Control Type	Control Source	Flash Yellow	Flash Red	Flash Alt	MMU Channel
1	Phase Vehicle	1		X	X	1
2	Phase Vehicle	2	X			2
3	Phase Vehicle	3		X	X	3
4	Overlap	8		X		4
5	Phase Vehicle	5		X		5
6	Phase Vehicle	6	X		X	6
7	Overlap	7		X		7
8	Phase Vehicle	8		X	X	8
9	Overlap	1	X		X	9
10	Overlap	2		X	X	10
11	Overlap	3	X			11
12	Overlap	4		X		12
13	Phase Ped	2				13
14	Phase Ped	4				14
15	Phase Ped	6				15
16	Phase Ped	8				16
17	Overlap	5		X	X	17
18	Overlap	6		X		18

MAXTIME ALTERNATE PHASING ACTIVATION DETAIL

To run alternate phasing, select a Pattern that is programmed to run Overlap Plan 2 and Detector Plan 2.
A Pattern can be selected through the scheduler or manually by changing the Operational Mode.

PHASING	OVERLAP PLAN	VEH DET PLAN
ACTIVE PLAN REQUIRED TO RUN DEFAULT PHASING	1	1
ACTIVE PLAN REQUIRED TO RUN ALTERNATE PHASING	2	2

ALTERNATE PHASING CHANGE SUMMARY

THE FOLLOWING IS A SUMMARY OF WHAT TAKES PLACE WHEN OVERLAP PLAN 2 AND VEHICLE DETECTOR PLAN 2 ACTIVATE TO CALL THE "ALTERNATE PHASING":

OVERLAP PLAN 2: Modifies overlap included phases for head 51 to run protected turns only.

VEH DET PLAN 2: Disables phase 2 call on loop 5A and reduces delay time for phase 5 call on loop 5A to 0 seconds.

5/9/2024
e:\projects\0400_sht_e\e_2024xxyy.dgn
USER:defcult

Electrical Detail - Sheet 2 of 3

DOCUMENT NOT CONSIDERED FINAL UNLESS ALL SIGNATURES COMPLETED

THIS ELECTRICAL DETAIL IS FOR
THE SIGNAL DESIGN: 09-0400
DESIGNED: May 2024
SEALED: 05-09-2024
REVISED: N/A

TRANSYSTEMS
1 Glenwood Avenue
Raleigh, NC 27603
Tel:919.789.9977
Fax:919.789.9591
License: F-0453

Electrical and Programming Details For:

Prepared for the Offices of:
Traffic Engineering Branch
Traffic Signals Management Section
750 N. Greenfield Pkwy, Garner, NC 27529

NC 8 (Winston Road)
at
SR 1406 (Biesecker Road)

Division 9 | Davidson County | Lexington

PLAN DATE:	May 2024	REVIEWED BY:	
PREPARED BY:	J.T. Rowe	REVIEWED BY:	G.G. Murr, Jr.

REVISIONS	INIT.	DATE

SEAL
NORTH CAROLINA PROFESSIONAL ENGINEER SEAL 008453 JOHN T. ROWE JR.

DATE

SIG. INVENTORY NO. 09-0400

PROJECT REFERENCE NO.	SHEET NO.
U-5757	Sig.14.3

SEQUENCE DETAIL

Front Panel
Main Menu >Controller >Sequence & Phs Config>Sequences

Web Interface
Home >Controller >Sequence

Sequence 1

Ring	Sequence Data
1	2,a,4,7,b
2	5,6,a,,b

LOGIC PROCESSOR PROGRAMMING

Front Panel
Main Menu >Controller >More >User Programs >Definition

Web Interface
Home >Controller >User Programs Configuration >User Programs Definition

Program 1

Statement	Result	Index	Operation	Parameter A	Index	Parameter B	Index	Delay	Ext
1	Phase Phase Omit	7	Result=Latch(A,B)	Phase Green	4	Phase Green	6	0.0	0.0

LOGIC STATEMENT DESCRIPTION

Statement 1 Description: Omit phase 7 if phase 4 call is present. (Reset latch with phase 6.)

Electrical Detail - Sheet 3 of 3

THIS ELECTRICAL DETAIL IS FOR
THE SIGNAL DESIGN: 09-0400
DESIGNED: May 2024
SEALED: 05-09-2024
REVISED: N/A

TRANSYSTEMS
1 Glenwood Avenue
Raleigh, NC 27603
Tel:919.789.9977
Fax:919.789.9591
License: F-0453

Electrical and Programming Details For:

Prepared for the Offices of:
Transportation Mobility and Safety Division
STATE OF NORTH CAROLINA
DEPARTMENT OF TRANSPORTATION
ITS & Signals Management Section
750 N. Greenfield Pkwy, Garner, NC 27529

NC 8 (Winston Road)
at
SR 1406 (Biesecker Road)

Division 9 Davidson County Lexington

PLAN DATE:	May 2024	REVIEWED BY:	
PREPARED BY:	J.T. Rowe	REVIEWED BY:	G.G. Murr, Jr.

REVISIONS	INIT.	DATE

DOCUMENT NOT CONSIDERED FINAL UNLESS ALL SIGNATURES COMPLETED

SEAL
NORTH CAROLINA PROFESSIONAL SEAL 008453 ENGINEER JOHN T. ROWE JR.

DATE

SIG. INVENTORY NO. 09-0400

5/9/2024
...\09040_sm_ele_2024xxyy.dgn
USER:default

Design Loading for METAL POLE NO. 1

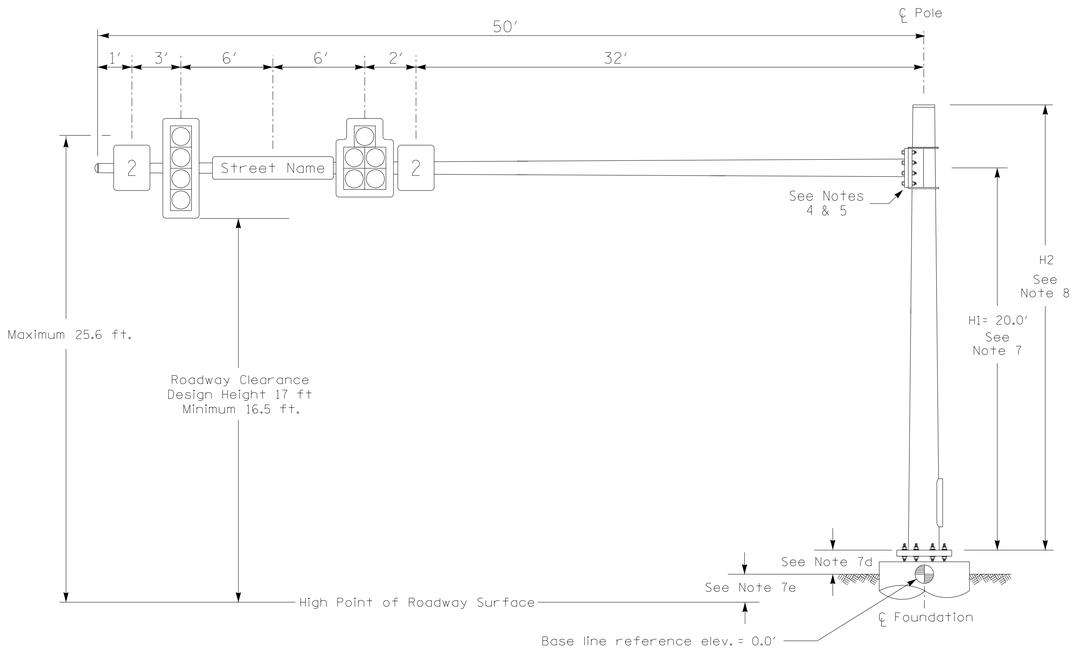

Elevation View

SPECIAL NOTE

The contractor is responsible for verifying that the mast arm attachment height (H1) will provide the "Design Height" clearance from the roadway before submitting final shop drawings for approval. Verify elevation data below which was obtained by field measurement or from available project survey data.

Elevation Data for Mast Arm Attachment (H1)

Elevation Differences for:	MP#1	
Baseline reference point at ⊕ Foundation @ ground level	0.0 ft.	
Elevation difference at High point of roadway surface	+0.59 ft.	
Elevation difference at Edge of travelway or face of curb	-0.15 ft.	

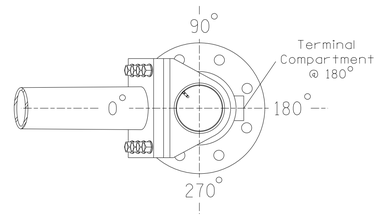

POLE RADIAL ORIENTATION

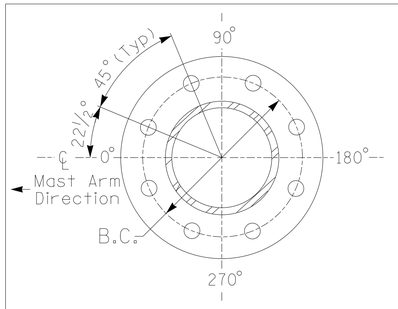

8 BOLT BASE PLATE DETAIL

See Note 6

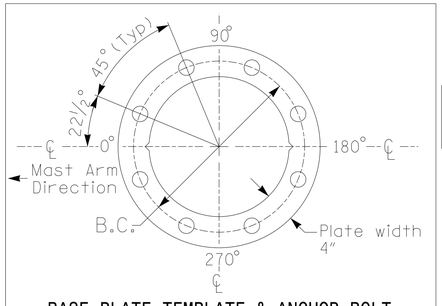

BASE PLATE TEMPLATE & ANCHOR BOLT LOCK PLATE DETAIL

For 8 Bolt Base Plate

MAST ARM LOADING SCHEDULE

LOADING SYMBOL	DESCRIPTION	AREA	SIZE	WEIGHT
	RIGID MOUNTED SIGNAL HEAD 12"-5 SECTION-WITH BACKPLATE	16.3 S.F.	42.0" W X 56.0" L	103 LBS
	RIGID MOUNTED SIGNAL HEAD 12"-4 SECTION-WITH BACKPLATE	11.5 S.F.	25.5" W X 66.0" L	74 LBS
2	SIGN RIGID MOUNTED	7.5 S.F.	30.0" W X 36.0" L	14 LBS
Street Name	STREET NAME SIGN RIGID MOUNTED	16.0 S.F.	24.0" W X 96.0" L	36 LBS

NOTES

DESIGN REFERENCE MATERIAL

1. Design the traffic signal structure and foundation in accordance with:
   - The 1st Edition 2015 AASHTO LRFD "Standard Specifications for Structural Supports for Highway Signs, Luminaires, and Traffic Signals, including all of the latest interim revisions.
   - The 2024 NCDOT "Standard Specifications for Roads and Structures." The latest addenda to the specifications can be found in the traffic signal project special provisions.
   - The 2024 NCDOT Roadway Standard Drawings.
   - The traffic signal project plans and special provisions.
   - The NCDOT "Metal Pole Standards" located at the following NCDOT website: https://connect.ncdot.gov/resources/safety/Pages/ITS-Design-Resources.aspx

DESIGN REQUIREMENTS

2. Design the traffic signal structure using the loading conditions shown in the elevation views. These are anticipated worst case "design loads" and may not represent the actual loads that will be applied at the time of the installation. The contractor should refer to the traffic signal plans for the actual loads that will be applied at the time of the installation.
3. Design all signal supports using force ratios that do not exceed 0.9.
4. The camber design for the mast arm deflection should provide an appearance of a low pitched arch where the tip or the free end of the mast arm does not deflect below horizontal when fully loaded.
5. A clamp-type bolted mast arm-to-pole connection may be used instead of the welded ring stiffened box connection shown as long as the connection meets all of the design requirements.
6. Design base plate with 8 anchor bolt holes. Provide 2 inch x 60 inch anchor bolts.
7. The mast arm attachment height (H1) shown is based on the following design assumptions:
   a. Mast arm slope and deflection are not considered in determining the arm attachment height as they are assumed to offset each other.
   b. Signal heads are rigidly mounted and vertically centered on the mast arm.
   c. The roadway clearance height for design is as shown in the elevation views.
   d. The top of the pole base plate is 0.75 feet above the ground elevation.
   e. Refer to the Elevation Data Chart for the elevation differences between the proposed foundation ground level and the high point of the roadway.
8. The pole manufacturer will determine the total height (H2) of each pole using the greater of the following:
   - Mast arm attachment height (H1) plus 2 feet, or
   - H1 plus 1/2 of the total height of the mast arm attachment assembly plus 1 foot.
9. If pole location adjustments are required, the contractor must gain approval from the Engineer as this may affect the mast arm lengths and arm attachment heights. The contractor may contact the Signal Design Section Senior Structural Engineer for assistance at (919) 814-5000.
10. The contractor is responsible for verifying that the mast arm length shown will allow proper positioning of the signal heads over the roadway.
11. The contractor is responsible for providing soil penetration testing data (SPT) to the pole manufacturer so site specific foundations can be designed.

NOTE: Metal poles and mast arms are to have black protective coating as specified in the Project Special Provisions. The selected shade, RAL® 9017 Traffic Black, must be verified and approved by the Engineer and City of Lexington before shop drawings will be reviewed by NCDOT.

NCDOT Wind Zone 5 (110 mph)

DOCUMENT NOT CONSIDERED FINAL UNLESS ALL SIGNATURES COMPLETED

Prepared for the Offices of:
Transportation Mobility and Safety Division
Traffic Engineering Branch
Signal Design Section
750 N. Greenfield Pkwy, Garner, NC 27529

NC 8 (Winston Road)
at
SR 1406 (Biesecker Road)

Division 9 Davidson County Lexington

PLAN DATE: May 2024 REVIEWED BY: G.G. Murr, Jr.
PREPARED BY: B.E. Wynn REVIEWED BY:

SCALE 0 N/A N/A

REVISIONS	INIT.	DATE

SEAL
NORTH CAROLINA PROFESSIONAL SEAL 14543 ENGINEER GENE G. MURR, JR.

DATE

SIG. INVENTORY NO. 09-0400

5/9/2024
09-0400_sig_mp_2024xxxx.dgn
USER:default

Design Loading for METAL POLE NO. 2, MAST ARM A

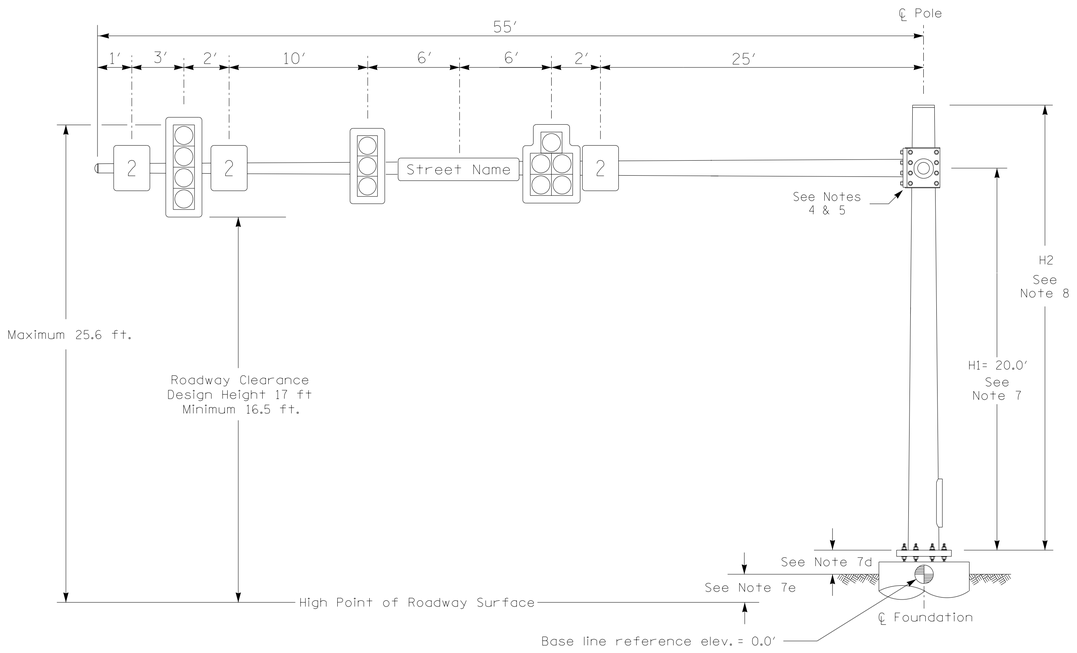

Elevation View @ 270°

Design Loading for METAL POLE NO. 2, MAST ARM B

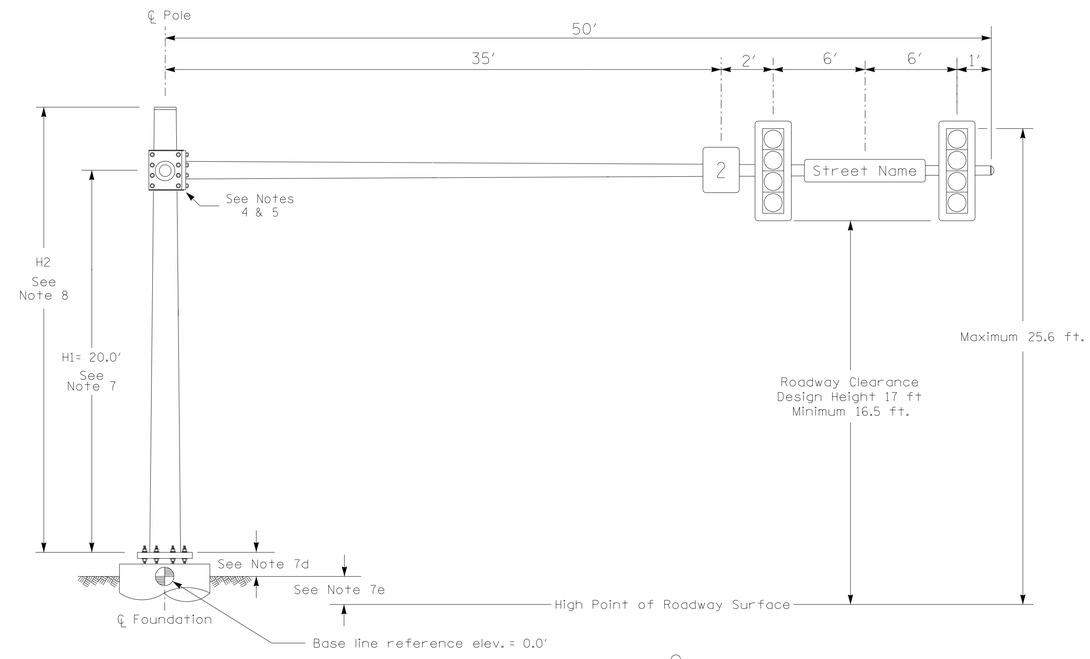

Elevation View @ 0°

SPECIAL NOTE

The contractor is responsible for verifying that the mast arm attachment height (H1) will provide the "Design Height" clearance from the roadway before submitting final shop drawings for approval. Verify elevation data below which was obtained by field measurement or from available project survey data.

Elevation Data for Mast Arm Attachment (H1)

Elevation Differences for:	MP#2 Arm A	
Baseline reference point at ℄ Foundation @ ground level	0.0 ft.	
Elevation difference at High point of roadway surface	+0.71ft.	
Elevation difference at Edge of travelway or face of curb	+0.27 ft.	

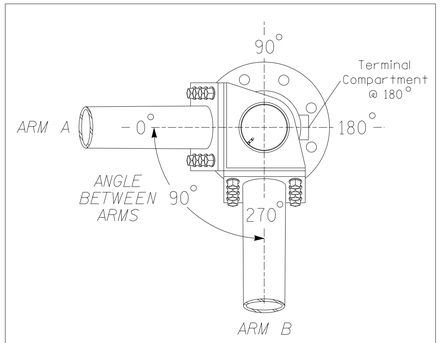

POLE RADIAL ORIENTATION

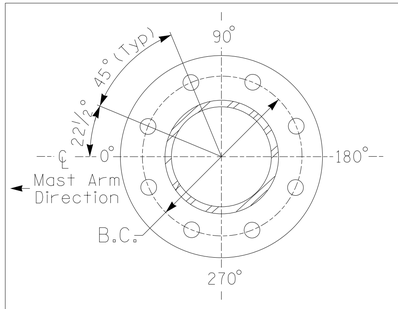

8 BOLT BASE PLATE DETAIL

See Note 6

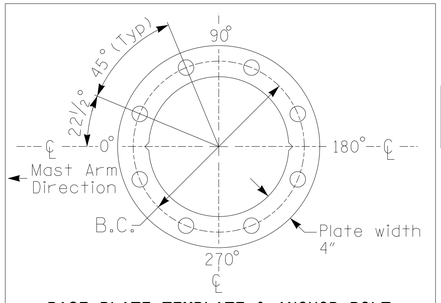

BASE PLATE TEMPLATE & ANCHOR BOLT LOCK PLATE DETAIL

For 8 Bolt Base Plate

MAST ARM LOADING SCHEDULE

LOADING SYMBOL	DESCRIPTION	AREA	SIZE	WEIGHT
	RIGID MOUNTED SIGNAL HEAD 12″-5 SECTION-WITH BACKPLATE	16.3 S.F.	42.0″W X 56.0″L	103 LBS
	RIGID MOUNTED SIGNAL HEAD 12″-4 SECTION-WITH BACKPLATE	11.5 S.F.	25.5″W X 66.0″L	74 LBS
	RIGID MOUNTED SIGNAL HEAD 12″-3 SECTION-WITH BACKPLATE	9.3 S.F.	25.5″W X 52.5″L	60 LBS
2	SIGN RIGID MOUNTED	7.5 S.F.	30.0″W X 36.0″L	14 LBS
Street Name	STREET NAME SIGN RIGID MOUNTED	16.0 S.F.	24.0″W X 96.0″L	36 LBS

NOTES

DESIGN REFERENCE MATERIAL

1. Design the traffic signal structure and foundation in accordance with:
   - The 1st Edition 2015 AASHTO LRFD "Standard Specifications for Structural Supports for Highway Signs, Luminaires, and Traffic Signals, including all of the latest interim revisions.
   - The 2024 NCDOT "Standard Specifications for Roads and Structures." The latest addenda to the specifications can be found in the traffic signal project special provisions.
   - The 2024 NCDOT Roadway Standard Drawings.
   - The traffic signal project plans and special provisions.
   - The NCDOT "Metal Pole Standards" located at the following NCDOT website: https://connect.ncdot.gov/resources/safety/Pages/ITS-Design-Resources.aspx

DESIGN REQUIREMENTS

2. Design the traffic signal structure using the loading conditions shown in the elevation views. These are anticipated worst case "design loads" and may not represent the actual loads that will be applied at the time of the installation. The contractor should refer to the traffic signal plans for the actual loads that will be applied at the time of the installation.
3. Design all signal supports using force ratios that do not exceed 0.9.
4. The camber design for the mast arm deflection should provide an appearance of a low pitched arch where the tip or the free end of the mast arm does not deflect below horizontal when fully loaded.
5. A clamp-type bolted mast arm-to-pole connection may be used instead of the welded ring stiffened box connection shown as long as the connection meets all of the design requirements. This requires staggering the connections. Use elevation data for each arm to determine appropriate arm connection points.
6. Design base plate with 8 anchor bolt holes. Provide 2 inch x 60 inch anchor bolts.
7. The mast arm attachment height (H1) shown is based on the following design assumptions:
   a. Mast arm slope and deflection are not considered in determining the arm attachment height as they are assumed to offset each other.
   b. Signal heads are rigidly mounted and vertically centered on the mast arm.
   c. The roadway clearance height for design is as shown in the elevation views.
   d. The top of the pole base plate is 0.75 feet above the ground elevation.
   e. Refer to the Elevation Data Chart for the elevation differences between the proposed foundation ground level and the high point of the roadway.
8. The pole manufacturer will determine the total height (H2) of each pole using the greater of the following:
   - Mast arm attachment height (H1) plus 2 feet, or
   - H1 plus 1/2 of the total height of the mast arm attachment assembly plus 1 foot.
9. If pole location adjustments are required, the contractor must gain approval from the Engineer as this may affect the mast arm lengths and arm attachment heights. The contractor may contact the Signal Design Section Senior Structural Engineer for assistance at (919) 814-5000.
10. The contractor is responsible for verifying that the mast arm length shown will allow proper positioning of the signal heads over the roadway.
11. The contractor is responsible for providing soil penetration testing data (SPT) to the pole manufacturer so site specific foundations can be designed.

NOTE: Metal poles and mast arms are to have black protective coating as specified in the Project Special Provisions. The selected shade, RAL® 9017 Traffic Black, must be verified and approved by the Engineer and City of Lexington before shop drawings will be reviewed by NCDOT.

NCDOT Wind Zone 5 (110 mph)

DOCUMENT NOT CONSIDERED FINAL UNLESS ALL SIGNATURES COMPLETED

Prepared for the Offices of:
Transportation Mobility and Safety Division
NORTH CAROLINA DEPARTMENT OF TRANSPORTATION
Signal Design Section
750 N.Greenfield Pkwy,Garner,NC 27529

NC 8 (Winston Road) at SR 1406 (Biesecker Road)

Division 9 Davidson County Lexington

PLAN DATE:	May 2024	REVIEWED BY:	G.G. Murr, Jr.
PREPARED BY:	B.E. Wynn	REVIEWED BY:	

SCALE: 0 N/A — N/A

REVISIONS	INIT.	DATE

SEAL
NORTH CAROLINA PROFESSIONAL SEAL 14543 ENGINEER GUNT G. MURR, JR.

DATE

SIG. INVENTORY NO. 09-0400

5/9/2024
09-0400_sig_mp_2024xxxx.dgn
USER:default

PROJECT REFERENCE NO.	SHEET NO.
U-5757	Sig. 15.0

2 Phase with Railroad Preemption Fully Actuated (Lexington NC 8 CLS)

Signal System #: D09-19_Lexington

PHASING DIAGRAM

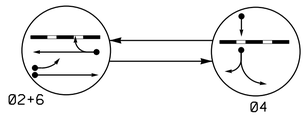

RAIL PREEMPT PHASES

(High Priority)

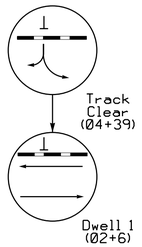

TABLE OF OPERATION

SIGNAL FACE	PHASE Ø2+6	Ø4	TRACK CLEAR	DWELL 1	FLASH
21, 22	G	R	R	G	Y
23	~~F.Y.~~	~~R~~	~~R~~	~~R~~	~~Y~~
41	R	←	←	R	R
42	R	→	→	R	R
43, 44	R	↑	R	R	R
61, 62	G	R	R	G	Y
Sign B	OFF	OFF	ON	ON	✳

✳See Note 5

MAXTIME DETECTOR INSTALLATION CHART

DETECTOR					PROGRAMMING							
LOOP	SIZE (FT)	DISTANCE FROM STOPBAR (FT)	TURNS	NEW LOOP	CALL PHASE	DELAY TIME	EXTEND TIME	EXTEND	ADDED INITIAL	CALL	DELAY DURING GREEN	NEW CARD
2A	6X6	300	5	-	2	-	-	X	X	X	-	-
2B	6X6	0	2-4-2	-	2	3.0	-	X	-	X	X	-
4A	6X40	0	2-4-2	-	4	5.0	-	X	-	X	-	-
4B	6X15	+5	3	-	4	15.0	-	X	-	X	-	-
4C	6X40	✳	2-4-2	-	4	5.0	-	X	-	X	-	-
6A	6X6	300	5	-	6	-	-	X	X	X	-	-

✳Located at Stopbar at RR Gate

NOTES

1. Refer to "Roadway Standard Drawings NCDOT" dated January 2024 and "Standard Specifications for Roads and Structures" dated January 2024.
2. This location contains railroad preemption phasing. Do not program signal for late night flashing operation.
3. Tether signal heads 41 and 42.
4. Set all detector units to presence mode.
5. Install new controller in existing cabinet.
6. Ensure flashing operation does not alter operation of blankout signs.
7. Maximum times shown in timing chart are for free-run operation only. Coordinated signal system timing values supersede these values.
8. Program phase 40 to run concurrently with all phases during normal operation. Phase 39 must be incompatible with phase 40 and included as a track clear phase.

PHASING DIAGRAM DETECTION LEGEND

- DETECTED MOVEMENT
- UNDETECTED MOVEMENT (OVERLAP)
- UNSIGNALIZED MOVEMENT
- PEDESTRIAN MOVEMENT

SIGNAL FACE I.D.

All Heads L.E.D.

Louvered Section

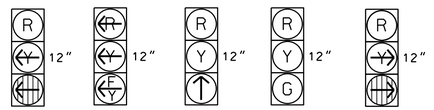

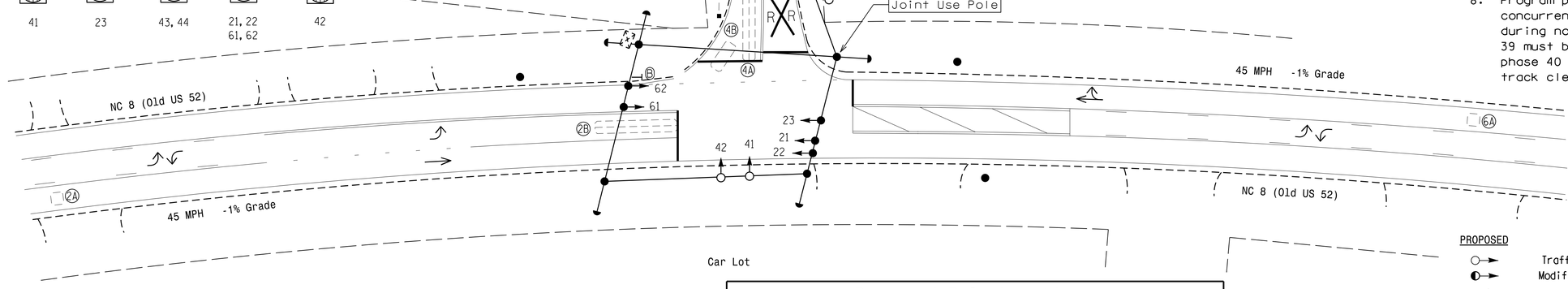

MAXTIME TIMING CHART

FEATURE	PHASE 2	4	6	39	40
Walk *	–	–	–		
Ped Clear *	–	–	–		
Min Green 1	10	7	10	1	1
Min Green 2	–	12	–		
Passage *	6.0	2.0	6.0		
Max 1 *	45	30	45		
Yellow Change	3.3	3.4	3.3	3.4	3.3
Red Clear	1.7	2.7	1.7	2.7	1.7
Added Initial *	2.5	–	2.5		
Maximum Initial *	34	–	34		
Time Before Reduction *	15	–	15		
Time To Reduce *	45	–	45		
Minimum Gap	3.0	–	3.0		
Advance Walk	–	–	–		
Non Lock Detector	–	X	–		
Vehicle Recall	MIN RECALL	–	MIN RECALL		MIN RECALL
Dual Entry	–	–	–		

* These values may be field adjusted. Do not adjust Min Green and Extension times for phases 2 and 6 lower than what is shown. Min Green for all other phases should not be lower than 4 seconds.

MAXTIME PREEMPTION CHART

FUNCTION	PRE 1
Type	RAIL ROAD
Exit Phases	4
Delay	0
Max Presence	0
Enter Min Green	1
Enter Walk	0
Enter Ped Clear	0
Enter Yellow Change	3.3
Enter Red Clear	1.7
Track Green	22
Track Yellow Change	3.4
Track Red Clear	2.7
Dwell Green	0
Exit Min Green	255 *
Exit Yellow Change	25.5 *
Exit Red Clear	25.5 *
Dwell Extend Time	1.0
Exit Type	EXIT PHASES
Ped Clear Through Yellow	N
Require All Red Entry	–

* Directs controller to use default phase timing.

This signal was designed for advanced preemption

Proposed Pole Locations

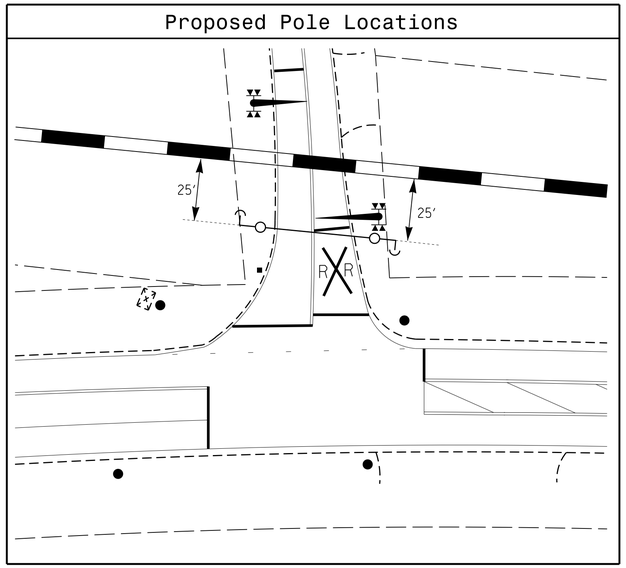

LEGEND

PROPOSED		EXISTING
○→	Traffic Signal Head	●→
◐→	Modified Signal Head	N/A
⊣	Sign	⊣
□↓	Pedestrian Signal Head With Push Button & Sign	■↓
○→	Signal Pole with Guy	●→
○⤵	Signal Pole with Sidewalk Guy	●⤵
▭	Inductive Loop Detector	▭
⊠	Controller & Cabinet	▪
□	Junction Box	■
·-·-·	2-in Underground Conduit	·-·-·
N/A	Right of Way	– – –
→	Directional Arrow	→
N/A	Railroad Tracks	▬
N/A	Railroad Gate and Flasher	▬*
Ⓐ	"DO NOT STOP ON TRACKS" Sign (R8-8)	Ⓐ
Ⓑ	"NO RIGHT TURN - TRAIN" L.E.D. Blankout Sign	Ⓑ
Ⓒ	"STOP HEREON RED" Sign (R10-6)	Ⓒ

Signal Upgrade

DOCUMENT NOT CONSIDERED FINAL UNLESS ALL SIGNATURES COMPLETED

Prepared In the Offices of:
Transportation Mobility and Safety Division
Traffic Engineering Branch
NC Department of Transportation
Signal Design Section
750 N.Greenfield Pkwy.Garner,NC 27529

NC 8 (Old US 52) at SR 1412 (Walser Road)

Division 9 Davidson County Lexington

PLAN DATE: January 2024 REVIEWED BY:

PREPARED BY: I.O. Umozurike REVIEWED BY:

REVISIONS	INIT.	DATE

SCALE 0 30 1"=30'

SEAL
NORTH CAROLINA PROFESSIONAL SEAL 026486 ENGINEER ROBERT J. ZIEMBA

DocuSigned by: Robert J Ziemba 02/29/2024

SIGNATURE DATE

SIG. INVENTORY NO. 09-1325

29-FEB-2024 11:46
S:\traffic\SIGNALS\Signal Design Section\Central Region\Div 9\mu-5757\#01325_sig_dsn_20240229.dgn
rziemba

PROJECT REFERENCE NO.	SHEET NO.
U-5757	Sig. 15.1

18 CHANNEL CONFLICT MONITOR PROGRAMMING DETAIL

(remove jumpers and set switches as shown)

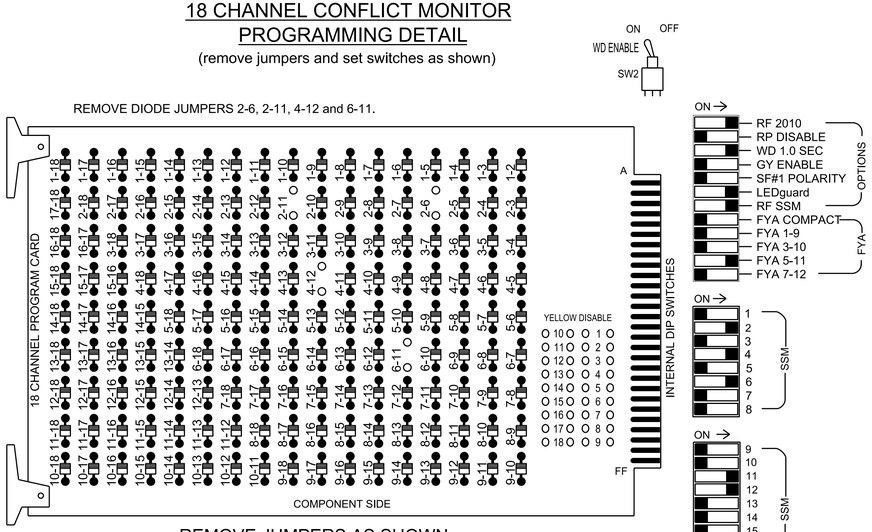

REMOVE JUMPERS AS SHOWN

NOTES:

1. Card is provided with all diode jumpers in place. Removal of any jumper allows its channels to run concurrently.
2. Ensure jumpers SEL2-SEL5 and SEL9 are present on the monitor board.
3. Ensure that the Red Enable is active at all times during normal operation.
4. Connect serial cable from conflict monitor to comm. port 1 of 2070 controller. Ensure conflict monitor communicates with 2070.

NOTES

1. To prevent "flash-conflict" problems, insert red flash program blocks for all unused vehicle load switches in the output file. The installer shall verify that signal heads flash in accordance with the signal plan.
2. Program controller to start up in phase 2 Green No Walk, 6 Green No Walk, 39 Phase Not On, and 40 Green No Walk.
3. Program Phase 39 for No Startup Veh Call.
4. Program Phase 40 for Min Recall.
5. Program Phase 4 for 12 seconds of Min Green 2 time.
6. If this signal will be managed by an ATMS software, enable controller and detector logging for all detectors used at this location.
7. The cabinet and controller are part of the Lexington NC 8 CLS. Signal System #: D09-19_Lexington

EQUIPMENT INFORMATION

Controller.....2070LX
Cabinet.....332 w/ Aux
Software.....Q-Free MAXTIME
Cabinet Mount.....Base
Output File Positions.....18 With Aux. Output File
Load Switches Used.....S2, S5, S8, AUX S4, AUX S5
Phases Used.....2, 4, 6, **39, **40
Overlap "1".....Not Used
Overlap "2".....Not Used
Overlap "3".....*
Overlap "4".....*

*See overlap programming detail on sheet 2
**Phase used for preemption timing purposes only.

SIGNAL HEAD HOOK-UP CHART

LOAD SWITCH NO.	S1	S2	S3	S4	S5	S6	S7	S8	S9	S10	S11	S12	AUX S1	AUX S2	AUX S3	AUX S4	AUX S5	AUX S6
CMU CHANNEL NO.	1	2	13	3	4	14	5	6	15	7	8	16	9	10	17	11	12	18
PHASE	1	2	2 PED	3	4	4 PED	5	6	6 PED	7	8	8 PED	OL1	OL2	SPARE	OL3	OL4	SPARE
SIGNAL HEAD NO.	NU	21,22	NU	NU	41,42	NU	NU	61,62	NU	NU	NU	NU	NU	NU	NU	23★	43,44	NU
RED		128			101			134									A101	
YELLOW		129						135									A102	
GREEN		130						136										
RED ARROW																A114		
YELLOW ARROW					102											A115		
FLASHING YELLOW ARROW																A116		
GREEN ARROW					103												A103	

NU = Not Used
★See pictorial of head wiring in detail this sheet.

FYA SIGNAL WIRING DETAIL

(wire signal heads as shown)

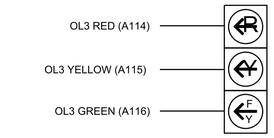

23

INPUT FILE POSITION LAYOUT

(front view)

		1	2	3	4	5	6	7	8	9	10	11	12	13	14
FILE "I"	U	SLOT EMPTY	ø 2 2A	SLOT EMPTY	SLOT EMPTY	SLOT EMPTY	ø 4 4A	ø 4 4C	SLOT EMPTY	SLOT EMPTY	SLOT EMPTY	SLOT EMPTY	SLOT EMPTY	SLOT EMPTY	SLOT EMPTY	FS DC ISOLATOR
	L		ø 2 2B				ø 4 4B	NOT USED							ST DC ISOLATOR
FILE "J"	U	SLOT EMPTY	ø 6 6A	SLOT EMPTY	SLOT EMPTY	SLOT EMPTY	SLOT EMPTY	SLOT EMPTY	SLOT EMPTY	SLOT EMPTY	SLOT EMPTY	SLOT EMPTY	SLOT EMPTY	SLOT EMPTY	SLOT EMPTY	PRE1 AC ISOLATOR
	L		NOT USED												NOT USED

EX. : 1A, 2A, ETC. = LOOP NO.'S

FS = FLASH SENSE
ST = STOP TIME
PRE = PREEMPT

INPUT FILE CONNECTION & PROGRAMMING CHART

LOOP NO.	LOOP TERMINAL	INPUT FILE POS.	PIN NO.	INPUT POINT	DETECTOR NO.	CALL PHASE	DELAY TIME	EXTEND TIME	EXTEND	ADDED INITIAL	CALL	DELAY DURING GREEN
2A	TB2-5,6	I2U	39	1	2	2			X	X	X	
2B	TB2-7,8	I2L	43	5	3	2	3.0		X		X	X
4A	TB4-9,10	I6U	41	3	8	4	5.0		X		X	
4B	TB4-11,12	I6L	45	7	9	4	15.0		X		X	
4C	TB6-1,2	I7U	65	31	10	4	5.0		X		X	
6A	TB3-5,6	J2U	40	2	16	6			X	X	X	

INPUT FILE POSITION LEGEND: J2L
FILE J
SLOT 2
LOWER

OVERLAP PROGRAMMING

Front Panel
Main Menu >Controller >Overlap >Overlap Parameters/Overlap Timings

Web Interface
Home >Controller >Overlap Configuration >Overlaps

Overlap Plan 1

Overlap	3	4
Type	FYA 4 - Section	Normal
Included Phases	6	4
Modifier Phases	-	-
Modifier Overlaps	-	-
Trail Green	0	0
Trail Yellow	0.0	0.0
Trail Red	0.0	0.0

SEQUENCE DETAIL

Front Panel
Main Menu >Controller >Sequence & Phs Config>Sequences

Web Interface
Home >Controller >Sequence

Sequence 1

Ring	Sequence Data
1	2,a,4,b
2	6,a,b
3	39,c,40,d

THIS ELECTRICAL DETAIL IS FOR
THE SIGNAL DESIGN: 09-1325
DESIGNED: January 2024
SEALED: 02/29/2024
REVISED: N/A

PREEMPT 1 AC ISOLATOR (MODEL 252) OUTPUT PROGRAMMING DETAIL

(set DIP switches as shown below)

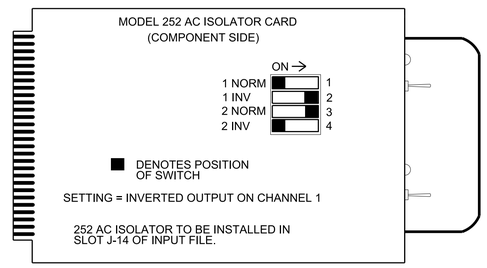

NOTE: IF ANOTHER MANUFACTURER TYPE OF AC ISOLATOR IS USED, OUTPUT PROGRAMMING IS LIKELY NOT TO EQUATE TO THAT SHOWN ABOVE.

Electrical Detail - Sheet 1 of 2

DOCUMENT NOT CONSIDERED FINAL UNLESS ALL SIGNATURES COMPLETED

Electrical and Programming Details For:

Prepared in the Offices of:
Transportation Mobility and Safety Division
Traffic Engineering Branch
Traffic & Signals Management Section
NORTH CAROLINA DEPARTMENT OF TRANSPORTATION
750 N. Greenfield Pkwy, Garner, NC 27529

NC 8 (Old US 52)
at
SR 1412 (Walser Road)

Division 9 | Davidson County | Lexington

PLAN DATE: February 2024 | REVIEWED BY:
PREPARED BY: Sarah Kirkpatrick | REVIEWED BY:

REVISIONS	INIT.	DATE

SEAL
NORTH CAROLINA PROFESSIONAL SEAL 036833 ENGINEER RYAN W. HOUGH
DocuSigned by: Ryan W. Hough 03/01/2024 DATE
SIG. INVENTORY NO. 09-1325

29-FEB-2024 15:24
I:\TSS\SIGNALS\Workgroups\Sig Mgmt\Projects From Signal Design\Active Projects\Kirkpatrick\09-1325\09_1325_sm.ele.20240229.dgn
sgkirkpatrick

PROJECT REFERENCE NO.	SHEET NO.
U-5757	Sig. 15.2

PREEMPTION PROGRAMMING

Front Panel
Main Menu >Controller >Preemption >Preempt Phasing/Preempt Parameters

Web Interface
Home >Controller >Preempt Configuration >Preempts

Preempt Configuration

Preempt	1
Enabled	Enabled
Type	Rail Road
Track Phases	4,39
Track Overlaps	-
Dwell Phases	2,6
Dwell Overlaps	-
Cycling Phases	-
Cycling Overlaps	-
Exit Phases	4
Exit Overlaps	4
Delay	0
Max Presence	0
Max Pres Act	Terminate
Enter Min Green	1
Enter Walk	0
Enter Ped Clear	0
Enter Yellow Change	3.3
Enter Red Clear	1.7
Track Green	22
Track Yellow Change	3.4
Track Red Clear	2.7
Dwell Green	0
Exit Min Green	255
Exit Yellow Change	25.5
Exit Red Clear	25.5
Dwell Ext Time	1.0
Exit Type	Exit Phases
Non Locking Memory	-
Not Ovrd Flash	X
Not Ovrd Nxt Pre	-
Require All Red Entry	-
Track Clear Ovrd	X
Ped Clear During Yellow	-

LOGIC PROCESSOR PROGRAMMING

Front Panel
Main Menu >Controller >More >User Programs >Definition

Web Interface
Home >Controller >User Programs Configuration >User Programs Definition

Program 1

Statement	Result	Index	Operation	Parameter A	Index	Parameter B	Index	Delay	Ext
1	Phase Min 2 Recall	4	Result=Latch(A,B)	Preempt Status	1	Phase Green	2	0.0	0.0

LOGIC STATEMENT DESCRIPTION

Statement 1 Description: If Preempt 1 is on the statement is true (latch on). Min Green 2 time will be used for phase 4 when exiting preemption while the statement is latched. It remains latched until phase 2 is green after exiting preemption.

When the controller advances to the preempt exit phase 4, the min green time will be held for 12 seconds instead of 7 seconds to keep the phase from prematurely gapping out after a preempt event. Thus allowing vehicles queued behind the tracks to move up to occupy loops 4A and/or 4B for normal extension.

RAILROAD PREEMPTION WIRING DETAIL

(wire as shown below)

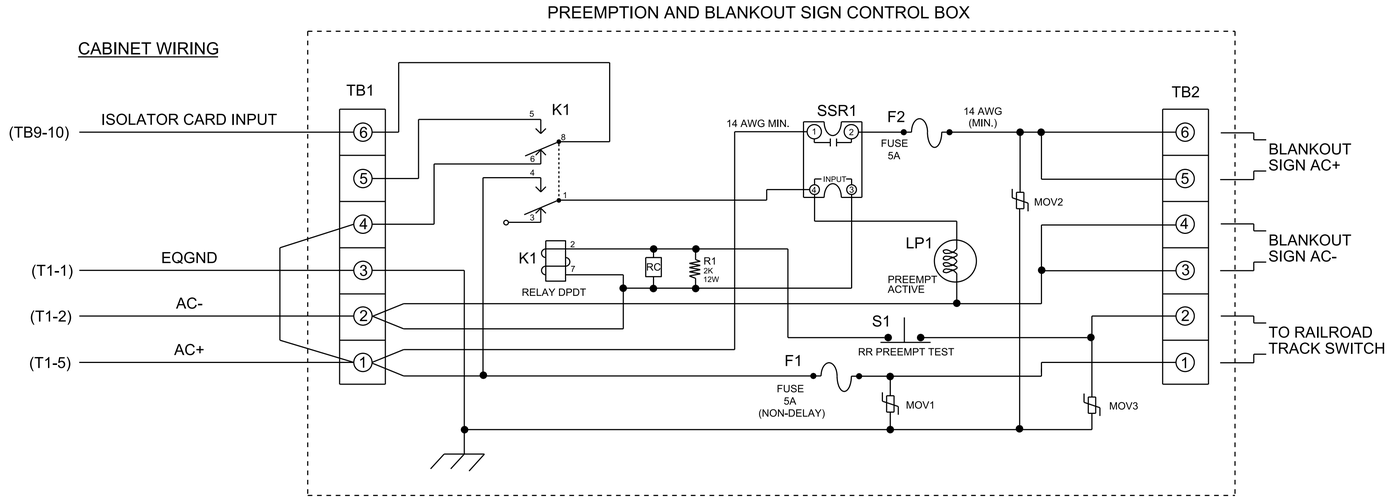

NOTES

1. Relay K1 is shown in the energized (Preempt not active) normal operation state.
2. Relay K1 is a DPDT with 120VAC coil with octal base.
3. Relay SSR1 is a SPST (normally open) Solid State Relay with AC input and AC (25 amp) output.
4. AC Isolator Card shall activate preemption upon removal of AC+ from the input (as shown above). To accomplish this set invert dip switch on AC Isolator Card.
5. IMPORTANT!! A jumper must be added between input file terminals J14-E and J14-K if not already present. Also, terminal TB9-12 (on input panel) shall be connected to AC neutral (jumper may have to be added).

FRONT VIEW

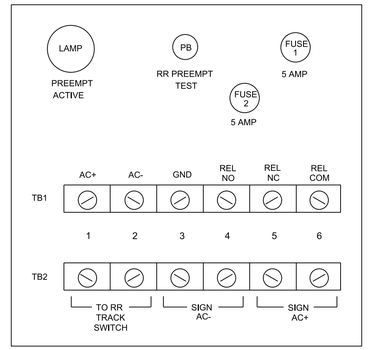

THIS ELECTRICAL DETAIL IS FOR
THE SIGNAL DESIGN: 09-1325
DESIGNED: January 2024
SEALED: 02/29/2024
REVISED: N/A

Electrical Detail - Sheet 2 of 2

DOCUMENT NOT CONSIDERED FINAL UNLESS ALL SIGNATURES COMPLETED

Electrical and Programming Details For:

NC 8 (Old US 52)
at
SR 1412 (Walser Road)

Prepared in the Offices of:

Transportation Mobility and Safety Division
NORTH CAROLINA DEPARTMENT OF TRANSPORTATION
Signals Management Section
750 N. Greenfield Pkwy, Garner, NC 27529

Division 9 | Davidson County | Lexington

PLAN DATE: February 2024 | REVIEWED BY:

PREPARED BY: Sarah Kirkpatrick | REVIEWED BY:

REVISIONS	INIT.	DATE

SEAL
NORTH CAROLINA
PROFESSIONAL
SEAL
036833
ENGINEER
RYAN W. HOUGH

DocuSigned by:
Ryan W. Hough
4303D0FAA2654C3...
03/01/2024
DATE

SIG. INVENTORY NO. 09-1325

29-FEB-2024 15:26
S:\Traffic\Signals\Workgroups\Sig Mgmt\Projects From Signal Design\Active Projects\Kirkpatrick\09-1325\091325_sm.ele,20240229.dgn
sgkirkpatrick

PROJECT I.D.NO.	SHEET NO.
	Sig.M1A

STATE OF NORTH CAROLINA
DIVISION OF HIGHWAYS

STANDARD DRAWINGS FOR ALL METAL POLES (LRFD)

NCDOT METAL POLE STANDARDS

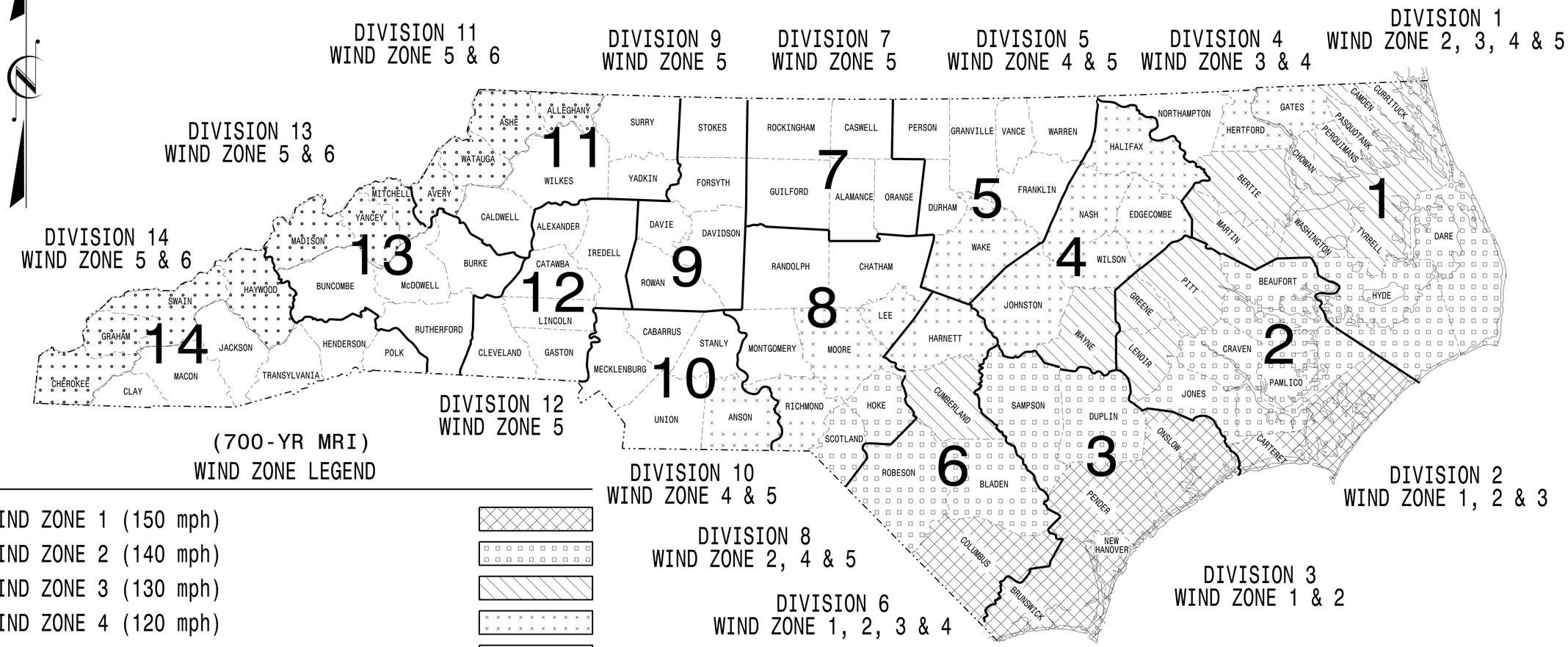

(700-YR MRI)
WIND ZONE LEGEND

WIND ZONE 1 (150 mph)	
WIND ZONE 2 (140 mph)	
WIND ZONE 3 (130 mph)	
WIND ZONE 4 (120 mph)	
WIND ZONE 5 (110 mph)	
WIND ZONE 6 (135 mph) Special Wind Zone	

https://connect.ncdot.gov/resources/safety/Pages/ITS-Design-Resources.aspx

Prepared in the Offices of:

Transportation Mobility and Safety Division
Signal Design Section
750 N.Greenfield Pkwy.
Garner, NC 27529

Designed in conformance with the latest 2020 Interim to the 1st Edition 2015

AASHTO LRFD

Standard Specifications for Highway Signs, Luminaires, and Traffic Signals

INDEX OF PLANS

DRAWING NUMBER	DESCRIPTION
Sig. M 1A	Statewide Wind Zone Map (700–yr MRI)
Sig. M 1B	Statewide Wind Zone Map (10–yr MRI)
Sig. M 2	Typical Fabrication Details–All Metal Poles
Sig. M 3	Typical Fabrication Details–Strain Poles
Sig. M 4	Typical Fabrication Details–Mast Arm Poles
Sig. M 5	Typical Fabrication Details–Mast Arm Connection
Sig. M 6	Typical Fabrication Details–Strain Pole Attachments
Sig. M 7	Construction Details–Foundations
Sig. M 8	Standard Strain Pole Foundation–All Soil Conditions
Sig. M 9	Typical Fabrication Details–CCTV Camera Poles

MOBILITY AND SAFETY DIVISION – TRANSPORTATION SYSTEMS MANAGEMENT AND OPERATIONS UNIT

D.Y. ISHAK – STATE SIGNALS ENGINEER

K. DURIGON, P.E. – ITS AND SIGNALS STRUCTURAL ENGINEER

B. WALKER, P.E. – ITS AND SIGNALS STRUCTURAL ENGINEER

SEAL

NORTH CAROLINA PROFESSIONAL SEAL 036626 ENGINEER KEVIN C. DURIGON

DocuSigned by:
Kevin Durigon
SIGNATURE
4B23DC79B3784DA...
09/21/2023
DATE

03-OCT-2023 13:07
S:\TTSASUM\ITS Signals\Signal Design Sections\Structures\Drawings\2024 Metal Pole Std Drawings for LRFD\2024 Sig. M1A Standard All Metal Pole (700-yr MRI).dgn
kdurigon

PROJECT I.D.NO.	SHEET NO.
	Sig.M1B

STATE OF NORTH CAROLINA
DIVISION OF HIGHWAYS

STANDARD DRAWINGS FOR ALL METAL POLES (LRFD)

NCDOT METAL POLE STANDARDS

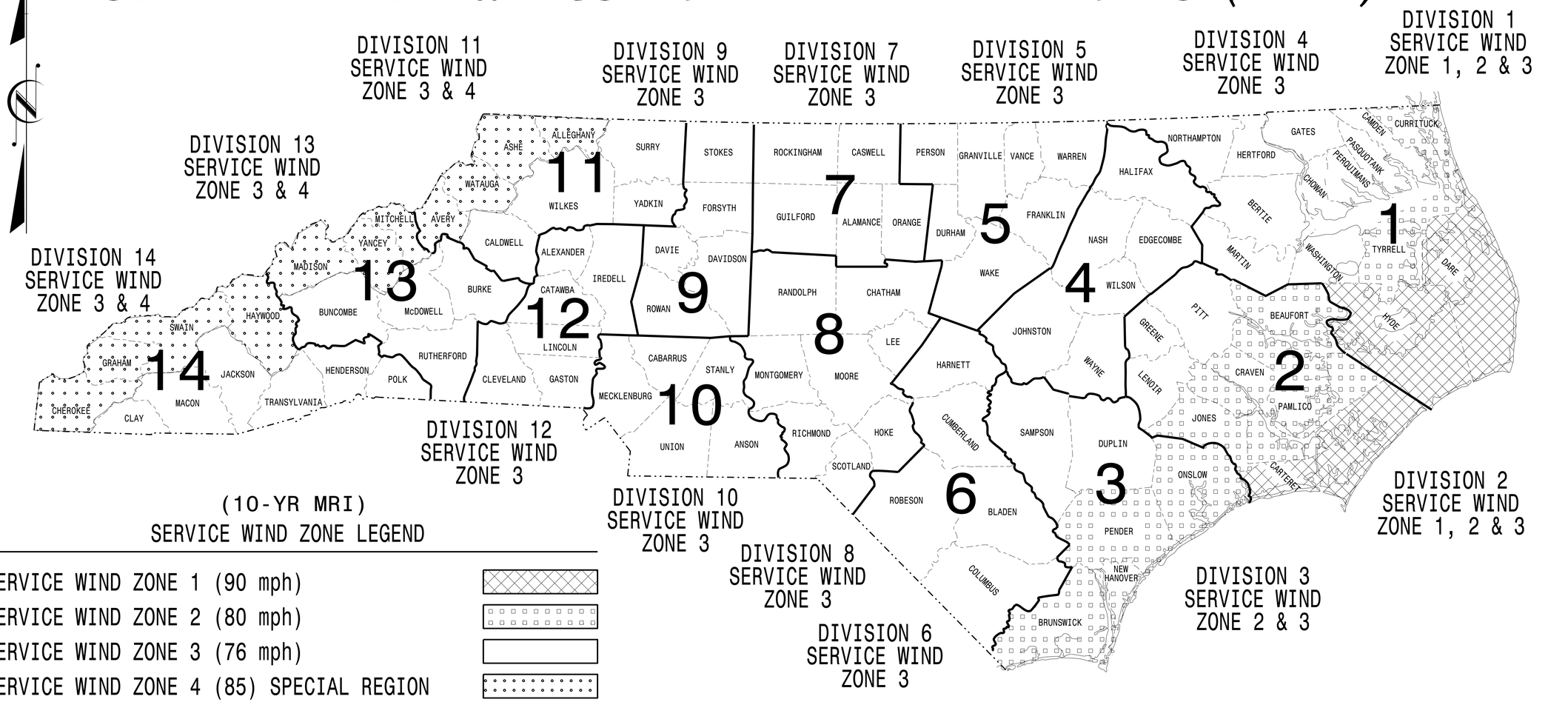

(10-YR MRI)
SERVICE WIND ZONE LEGEND

SERVICE WIND ZONE 1 (90 mph)	
SERVICE WIND ZONE 2 (80 mph)	
SERVICE WIND ZONE 3 (76 mph)	
SERVICE WIND ZONE 4 (85) SPECIAL REGION	

https://connect.ncdot.gov/resources/safety/Pages/ITS-Design-Resources.aspx

Prepared in the Offices of:

Transportation Mobility and Safety Division
Signal Design Section
750 N.Greenfield Pkwy.
Garner, NC 27529

Designed in conformance with the latest 2020 Interim to the 1st Edition 2015

AASHTO LRFD

Standard Specifications for Highway Signs, Luminaires, and Traffic Signals

INDEX OF PLANS

DRAWING NUMBER	DESCRIPTION
Sig. M 1A	Statewide Wind Zone Map (700–yr MRI)
Sig. M 1B	Statewide Wind Zone Map (10–yr MRI)
Sig. M 2	Typical Fabrication Details–All Metal Poles
Sig. M 3	Typical Fabrication Details–Strain Poles
Sig. M 4	Typical Fabrication Details–Mast Arm Poles
Sig. M 5	Typical Fabrication Details–Mast Arm Connection
Sig. M 6	Typical Fabrication Details–Strain Pole Attachments
Sig. M 7	Construction Details–Foundations
Sig. M 8	Standard Strain Pole Foundation–All Soil Conditions
Sig. M 9	Typical Fabrication Details–CCTV Camera Poles

NCDOT CONTACTS:

MOBILITY AND SAFETY DIVISION – TRANSPORTATION SYSTEMS MANAGEMENT AND OPERATIONS UNIT

D.Y. ISHAK – STATE SIGNALS ENGINEER

K. DURIGON, P.E. – ITS AND SIGNALS STRUCTURAL ENGINEER

B. WALKER, P.E. – ITS AND SIGNALS STRUCTURAL ENGINEER

SEAL

NORTH CAROLINA PROFESSIONAL SEAL 036626 ENGINEER KEVIN C. DURIGON

DocuSigned by:
Kevin Durigon
SIGNATURE
4B23DC79B3784DA...
09/21/2023
DATE

03-OCT-2023 12:21
S:\TSSGU\ITS Signals\Signal Design Section\Structures\Drawings\2024 Metal Pole Std Drawings for LRFD\2024 Sig. M1B Standard All Metal Pole (10-yr MRI).dgn
kcdurigon

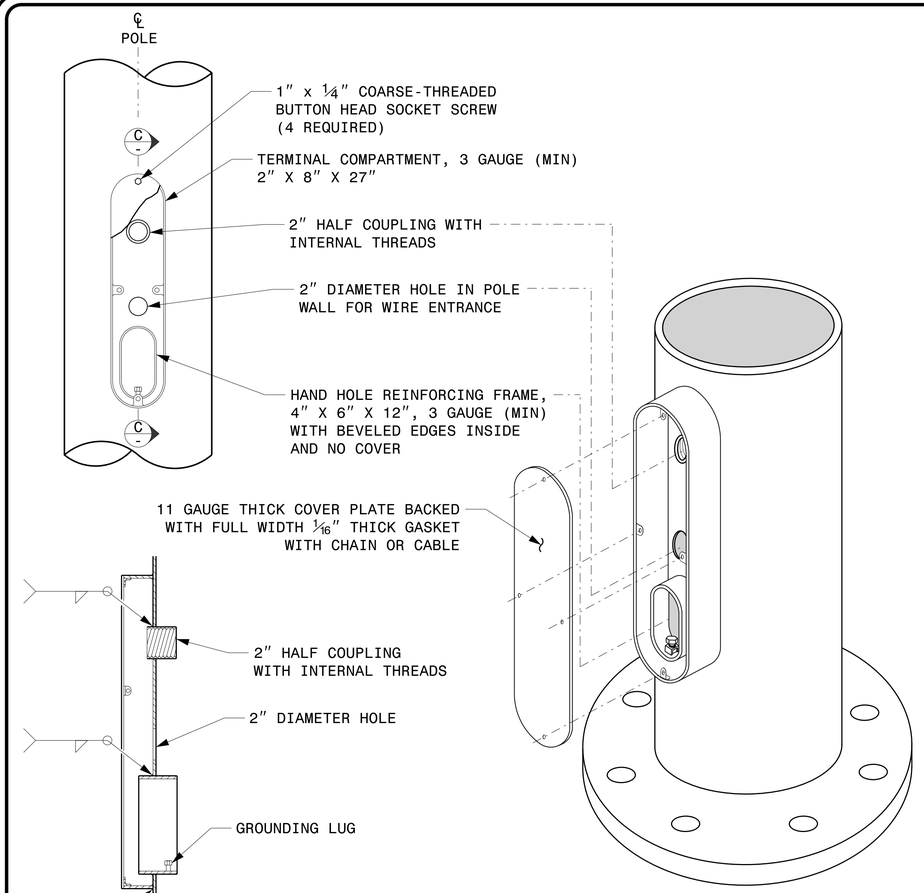

SECTION C-C

NOTE: UNLESS OTHERWISE SPECIFIED, LOCATE TERMINAL COMPARTMENT 1 FOOT ABOVE THE POLE BASE AT 180 DEGREES ON THE POLE'S RADIAL INDEX.

TERMINAL COMPARTMENT DETAIL

MFG _____ MFG. DATE: MM/YY
SHAFT D/T/L/Y ----/----/----/----
ARM-A D/T/L/Y ----/----/----/----
----/----/----/----
ARM-B D/T/L/Y ----/----/----/----
----/----/----/----
A.B. DIA./B.C./L/Y ----/----/----/----
NCDOT SIG. INV. NO. _ _ _ _ _ _ _ _
NCDOT POLE NO. _ _ _ _ _ _ _ _

SHAFT I.D. TAG
(PROVIDE ON SHAFT OF STRAIN POLES
AND MAST ARM POLE SHAFT)

MFG _____ MFG. DATE: MM/YY
SECTION D/T/L/Y ----/----/----/----
NCDOT SIG. INV. NO. _ _ _ _ _ _ _ _
NCDOT POLE NO. _ _ _ _ _ _ _ _

ARM I.D. TAG
(PROVIDE ON EACH SECTION OF
A MULTI-SECTION MAST ARM)

NOTES:

1. D = DIAMETER, T = THICKNESS, L = LENGTH, Y = YIELD STRENGTH
2. A.B. = ANCHOR BOLT
3. B.C. = BOLT CIRCLE OF ANCHOR BOLTS
4. IF STANDARD DESIGN, INCLUDE CASE NUMBER IN ADDITION TO POLE NUMBER ON "NCDOT POLE NO." LINE.
5. SIGNAL INV. NUMBER AND POLE I.D. NUMBER. SEE DRAWING M3 AND M4 FOR MOUNTING POSITIONS OF I.D. TAGS.

IDENTIFICATION TAG DETAILS

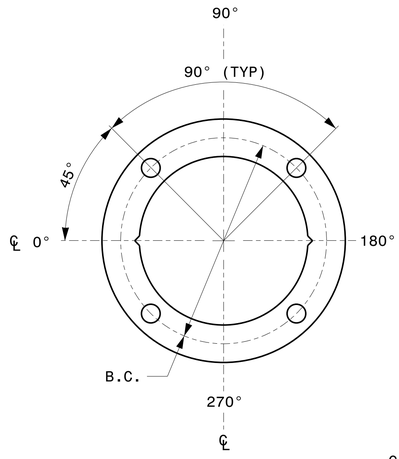

4 BOLT PATTERN

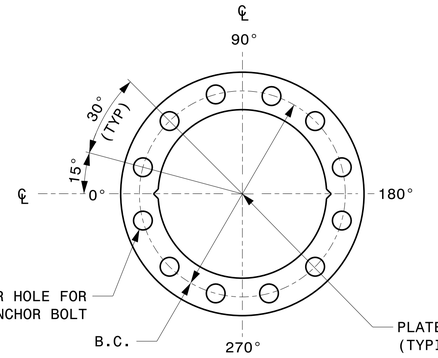

12 BOLT PATTERN

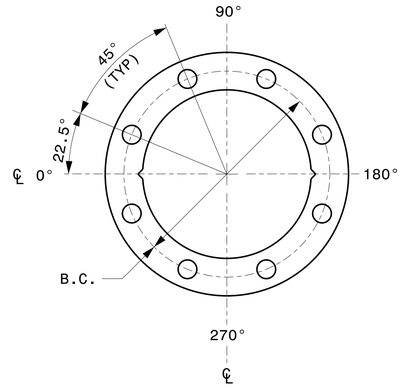

8 BOLT PATTERN

CONSTRUCT TEMPLATES AND PLATES FROM ¼″ (MIN) THICK STEEL. GALVANIZING IS NOT REQUIRED.

BASE PLATE TEMPLATE AND ANCHOR BOLT LOCK PLATE DETAILS

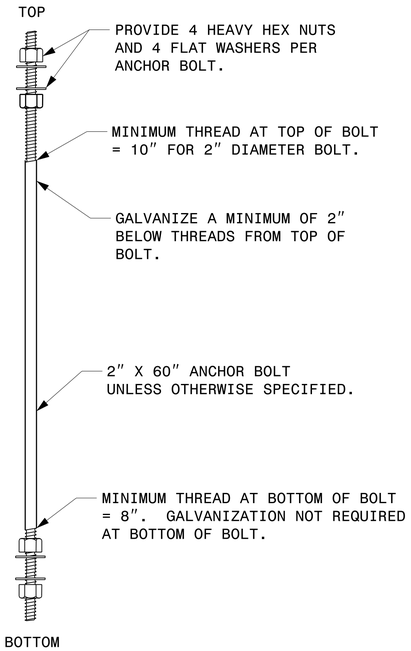

ANCHOR BOLT DETAIL

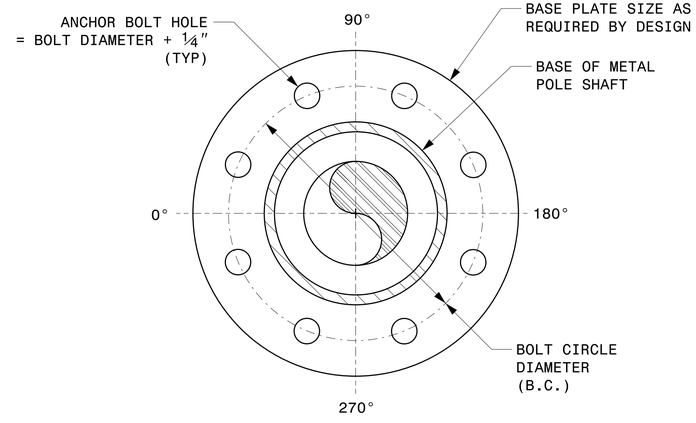

NOTE: BASE PLATE MAY BE CIRCULAR, OCTAGONAL, SQUARE OR RECTANGULAR IN SHAPE.

TYPICAL BASE PLATE DETAIL

PROJECT I.D. NO.	SHEET NO.
	Sig.M2

Fabrication Details – All Metal Poles

Prepared In the Offices of:
Transportation Mobility and Safety Division
Traffic Engineering Branch
Signal Design Section
750 N.Greenfield Pkwy.Garner,NC 27529

SCALE 0 NA NONE

Typical Fabrication Details For All Metal Poles

PLAN DATE: SEPTEMBER 2023 DESIGNED BY: C.F.ANDREWS
PREPARED BY: K.C. DURIGON REVIEWED BY: D.C. SARKAR

REVISIONS	INIT.	DATE

SEAL
NORTH CAROLINA PROFESSIONAL SEAL 036626 ENGINEER KEVIN C. DURIGON

DocuSigned by:
Kevin Durigon
SIGNATURE
4B23DC79B3784DA...
09/21/2023
DATE

03-OCT-2023 12:24
S:*TIS\Sig\M1-15 Sig\ms\Sig\ms Design Section\Structures\Drawings\2024 Metal Pole Std Drawings for LRFD\2024 Sig-M2 Std. Fabrication Details-All Poles.dgn
kcdurigon

PROJECT I.D. NO.	SHEET NO.
	Sig.M3

Fabrication Details – Strain Poles

NOTE:

1. OPENING IN POLE BASE PLATE SHALL BE EQUAL TO POLE BASE INSIDE DIAMETER MINUS 3½" BUT SHALL NOT BE LESS THAN 8½".

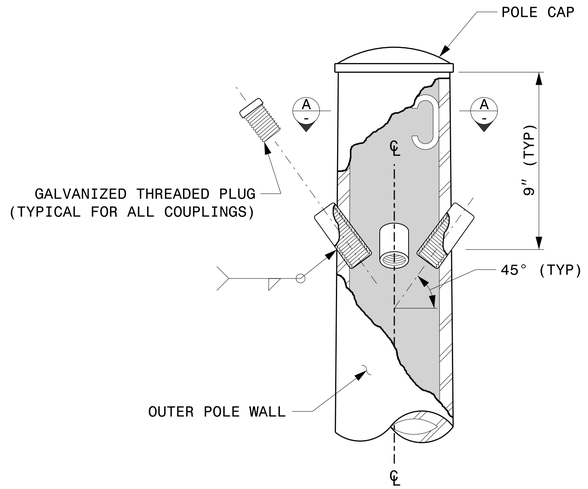

CABLE ENTRANCES AT TOP OF POLE

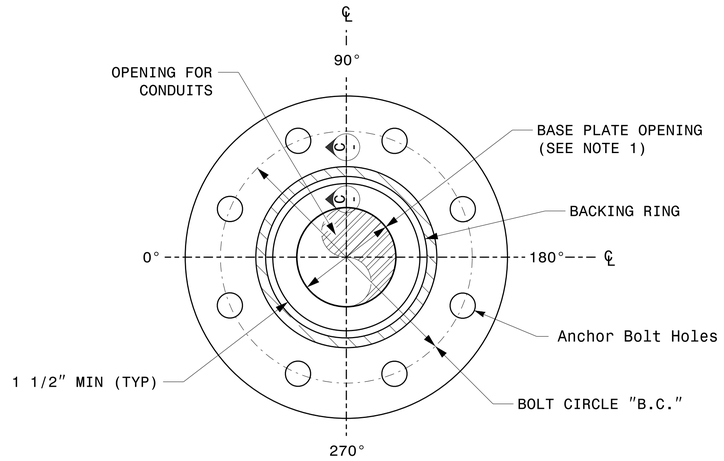

SECTION B-B

POLE BASE PLATE DETAILS
(8 AND 12 BOLT PATTERN)

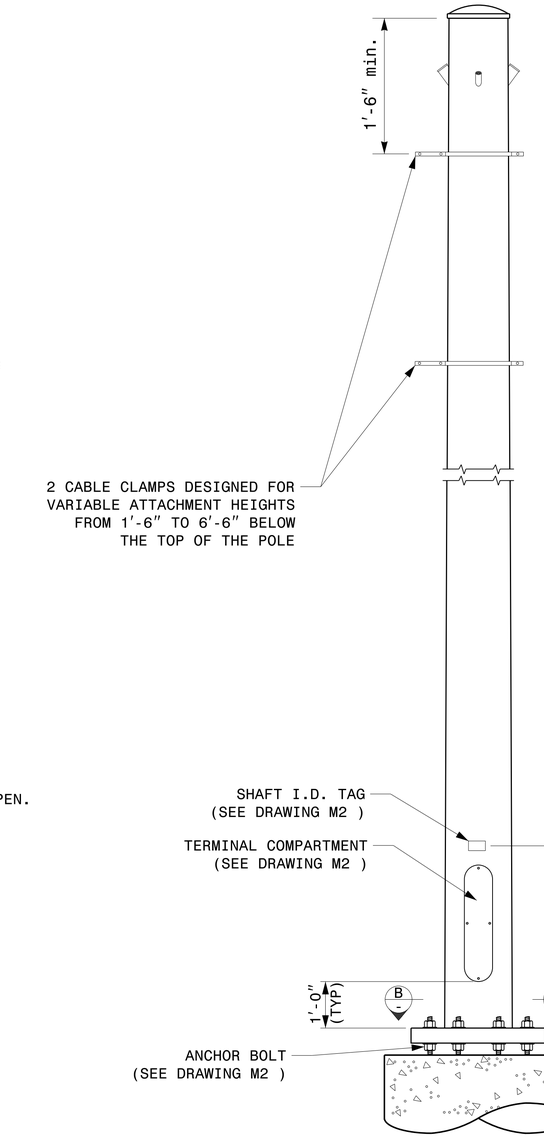

MONOTUBE STRAIN POLE

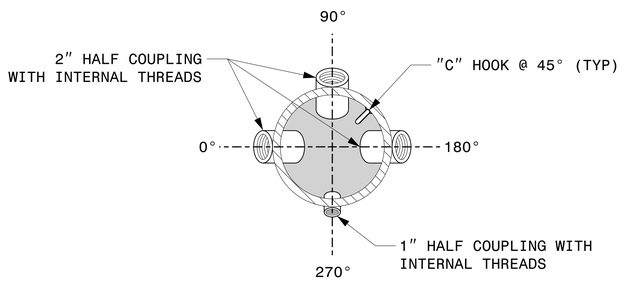

SECTION A-A

RADIAL ORIENTATION OF FACTORY INSTALLED ACCESSORIES AT TOP OF POLE

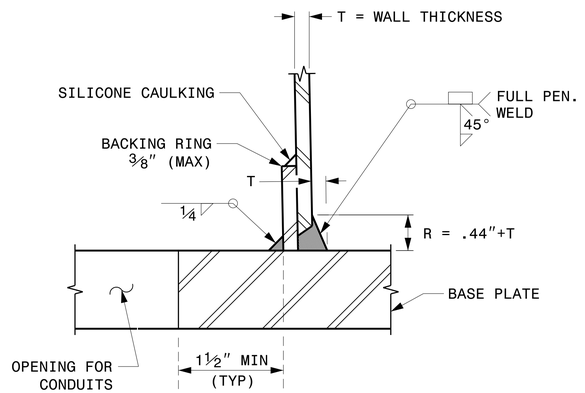

SECTION C-C

(POLE ATTACHMENT TO BASE PLATE)

FULL-PENETRATION GROOVE WELD DETAIL

Prepared In the Offices of:
Transportation Mobility and Safety Division
Signal Design Section
750 N.Greenfield Pkwy,Garner,NC 27529

SCALE
0 NA
NONE

Typical Fabrication Details
For
Strain Poles

PLAN DATE:	SEPTEMBER 2023	DESIGNED BY:	K.C. DURIGON
PREPARED BY:	K.C. DURIGON	REVIEWED BY:	D.C. SARKAR

REVISIONS	INIT.	DATE

SEAL
NORTH CAROLINA
PROFESSIONAL
SEAL
036626
ENGINEER
KEVIN C. DURIGON

DocuSigned by:
Kevin Durigon
SIGNATURE
4B23DC79B3784DA...
09/21/2023
DATE

03-OCT-2023 12:31
S:*ITS&SUM\ITS Signals\Signal Design Sections\Structures\Drawings*2024 Metal Pole Std Drawings for LRFD*2024 Sig_M3 Std. Fabrication Details-Strain Poles.dgn
kcdurigon

PROJECT I.D. NO.	SHEET NO.
	Sig.M4

NOTE:

1. OPENING IN POLE BASE PLATE SHALL BE EQUAL TO POLE BASE INSIDE DIAMETER MINUS 3½" BUT SHALL NOT BE LESS THAN 8½".

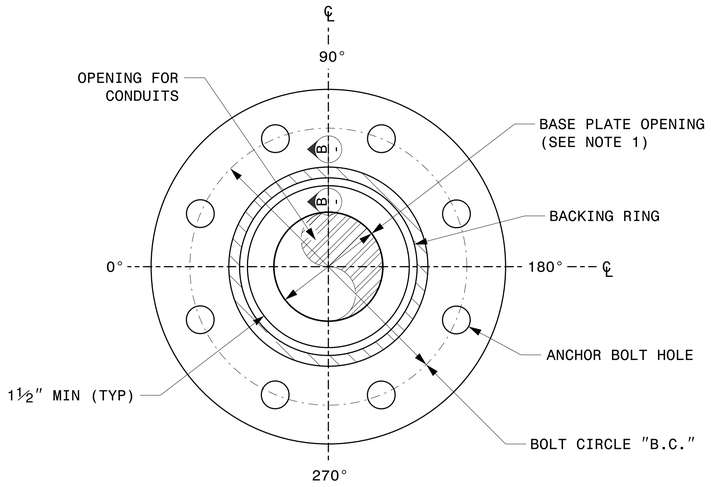

SECTION A-A
POLE BASE PLATE DETAILS

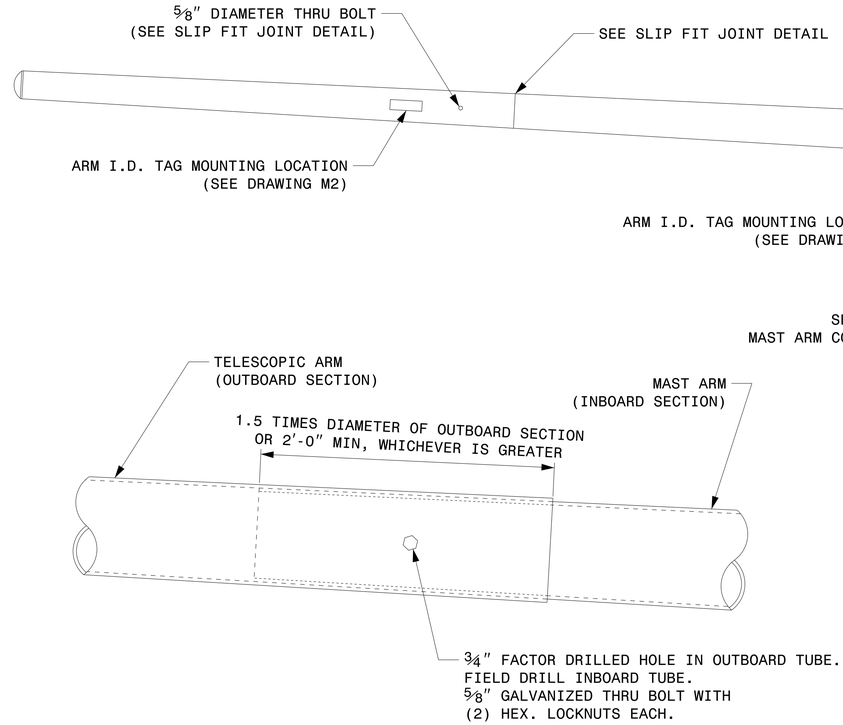

SLIP FIT JOINT DETAIL FOR MAST ARM

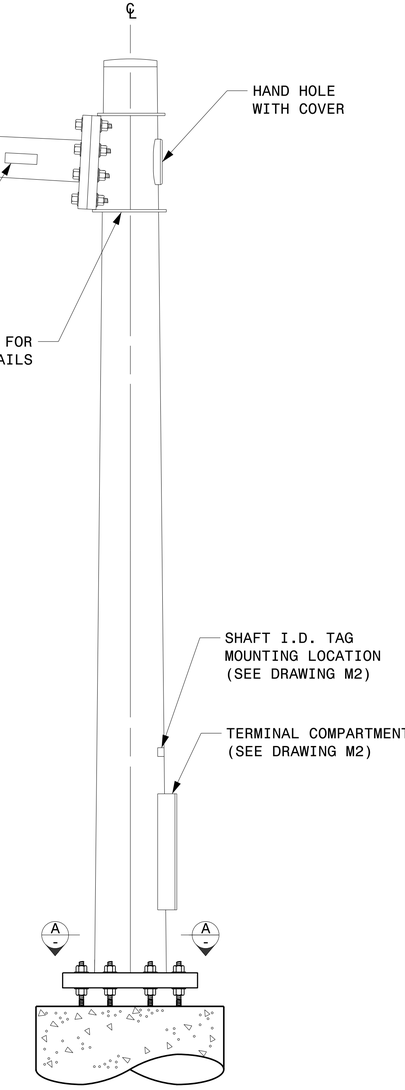

MAST ARM POLE

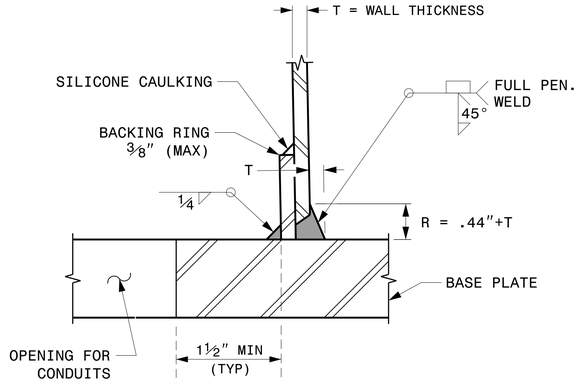

SECTION B-B
(POLE ATTACHMENT TO BASE PLATE)

FULL-PENETRATION GROOVE WELD DETAIL

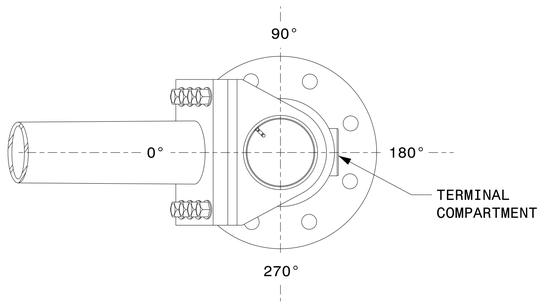

MAST ARM RADIAL ORIENTATION

Fabrication Details – Mast Arm Poles

Prepared in the Offices of:
Transportation Mobility and Safety Division
Signal Design Section
750 N.Greenfield Pkwy,Garner,NC 27529

SCALE
0 NA
NONE

Typical Fabrication Details For Mast Arm Poles

PLAN DATE:	SEPTEMBER 2023	DESIGNED BY:	K.C. DURIGON
PREPARED BY:	K.C. DURIGON	REVIEWED BY:	D.C. SARKAR

REVISIONS	INIT.	DATE

SEAL
NORTH CAROLINA PROFESSIONAL SEAL 036626 ENGINEER KEVIN C. DURIGON

DocuSigned by:
Kevin Durigon
SIGNATURE
4B23DC79B3784DA
09/21/2023
DATE

03-OCT-2023 12:35
S:\ITS&SU\ITS Signals\Signal Design Section\Structures\Drawings\2024 Metal Pole Std Drawings for LRFD\2024 Sig.M4 Std. Fabrication Details-Mast Arm Poles.dgn
kcdurigon

WELDED RING STIFFENED MAST ARM CONNECTION

PROJECT I.D. NO.	SHEET NO.
	Sig.M5

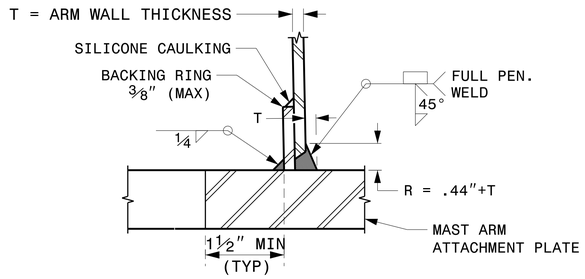

SECTION B-B
FULL-PENETRATION GROOVE WELD DETAIL

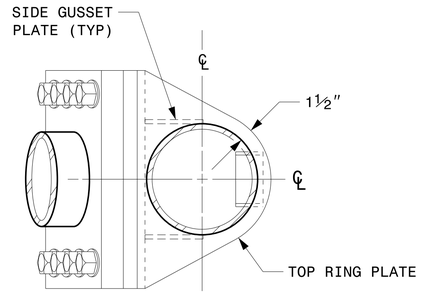

PLAN VIEW

NOTES:

1. PROVIDE A PERMANENT MEANS OF IDENTIFICATION ABOVE THE MAST ARM TO INDICATE PROPER ATTACHMENT ORIENTATION OF THE MAST ARM.
2. DESIGNER WILL DETERMINE THE SIZE OF ALL STRUCTURAL COMPONENTS, PLATES, FASTENERS, AND WELDS SHOWN UNLESS THEY ARE ALREADY SPECIFIED.
3. FABRICATOR IS RESPONSIBLE FOR PROVIDING APPROPRIATE HOLES AT DRAINAGE POINTS TO DRAIN GALVANIZING MATERIALS.
4. FOR MINIMUM EDGE DISTANCE AND NOMINAL BOLT HOLE SIZE, FOLLOW THE LATEST AISC STEEL CONSTRUCTION MANUAL.
5. PROVIDE UPPER HANDHOLE AS NECESSARY WHEN SHAFT EXTENSIONS ARE REQUIRED FOR LUMINAIRE ARMS OR CAMERA. FOR POLES WITHOUT LUMINAIRES/CAMERA, WIRING CAN BE DONE THROUGH THE TOP OF POLE.
6. ALLOWABLE RANGE OF FLANGE TILT ANGLE WILL VARY FROM 0° TO AS REQUIRED.

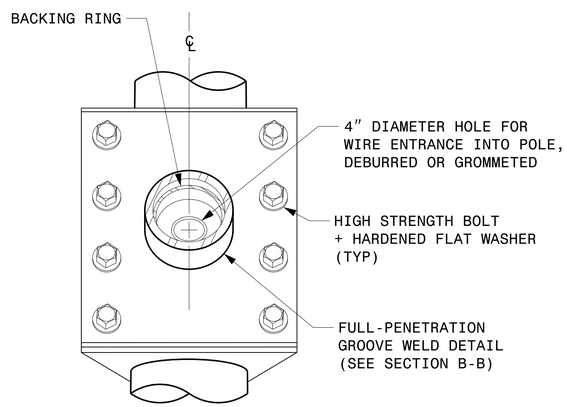

FRONT ELEVATION VIEW

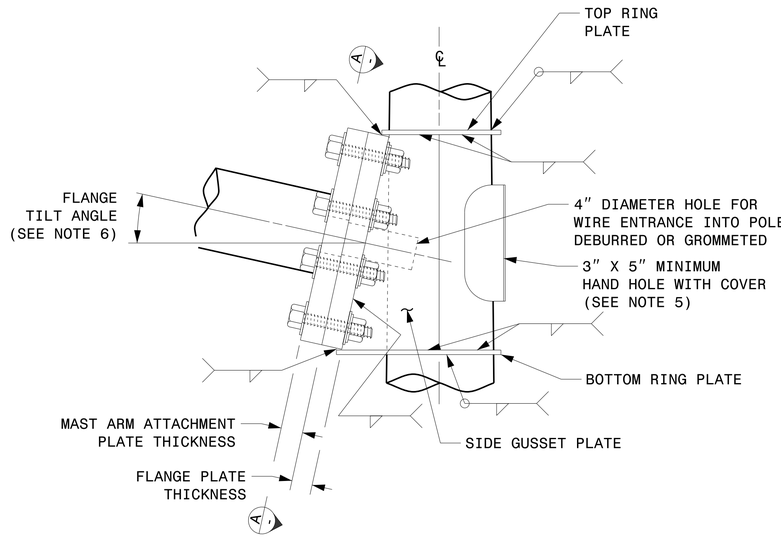

SIDE ELEVATION VIEW

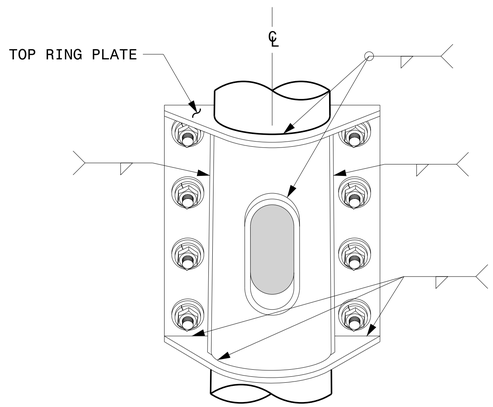

BACK ELEVATION VIEW

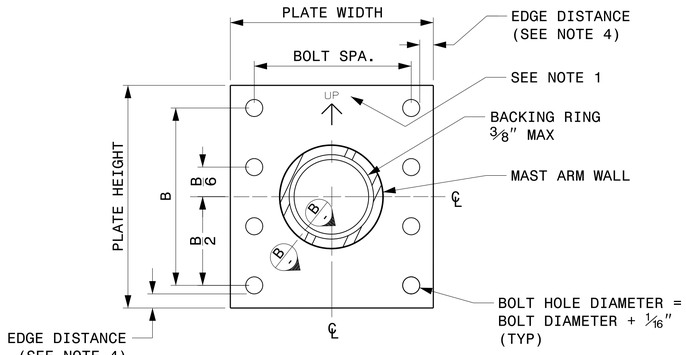

SECTION A-A
MAST ARM ATTACHMENT PLATE

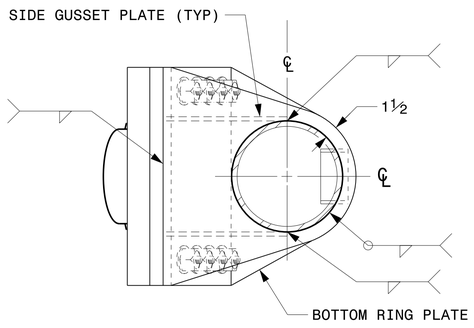

BOTTOM VIEW

Fabrication Details – Mast Arm Connection

Prepared in the Offices of:
Transportation Mobility and Safety Division
Signal Design Section
750 N.Greenfield Pkwy,Garner,NC 27529

SCALE
0 NA
NONE

Typical Fabrication Details
For
Mast Arm Connection To Pole

PLAN DATE:	SEPTEMBER 2023	DESIGNED BY:	C.F. ANDREWS
PREPARED BY:	K.C. DURIGON	REVIEWED BY:	D.C. SARKAR

REVISIONS	INIT.	DATE

SEAL
NORTH CAROLINA PROFESSIONAL SEAL 036626 ENGINEER KEVIN C. DURIGON

DocuSigned by:
Kevin Durigon
SIGNATURE
4B23DC79B3784DA...
09/21/2023
DATE

03-OCT-2023 12:38
S:*ITS&SU*ITS Signals*Signal Design Section*Structures*Drawings*2024 Metal Pole Std Drawings for LRFD*2024 Sig.M5 Std. Connection Fabrication Details-Mast Arm Poles.dgn
kcdurigon

PROJECT I.D. NO.	SHEET NO.
	Sig.M6

Fabrication Details – Strain Pole Attachments

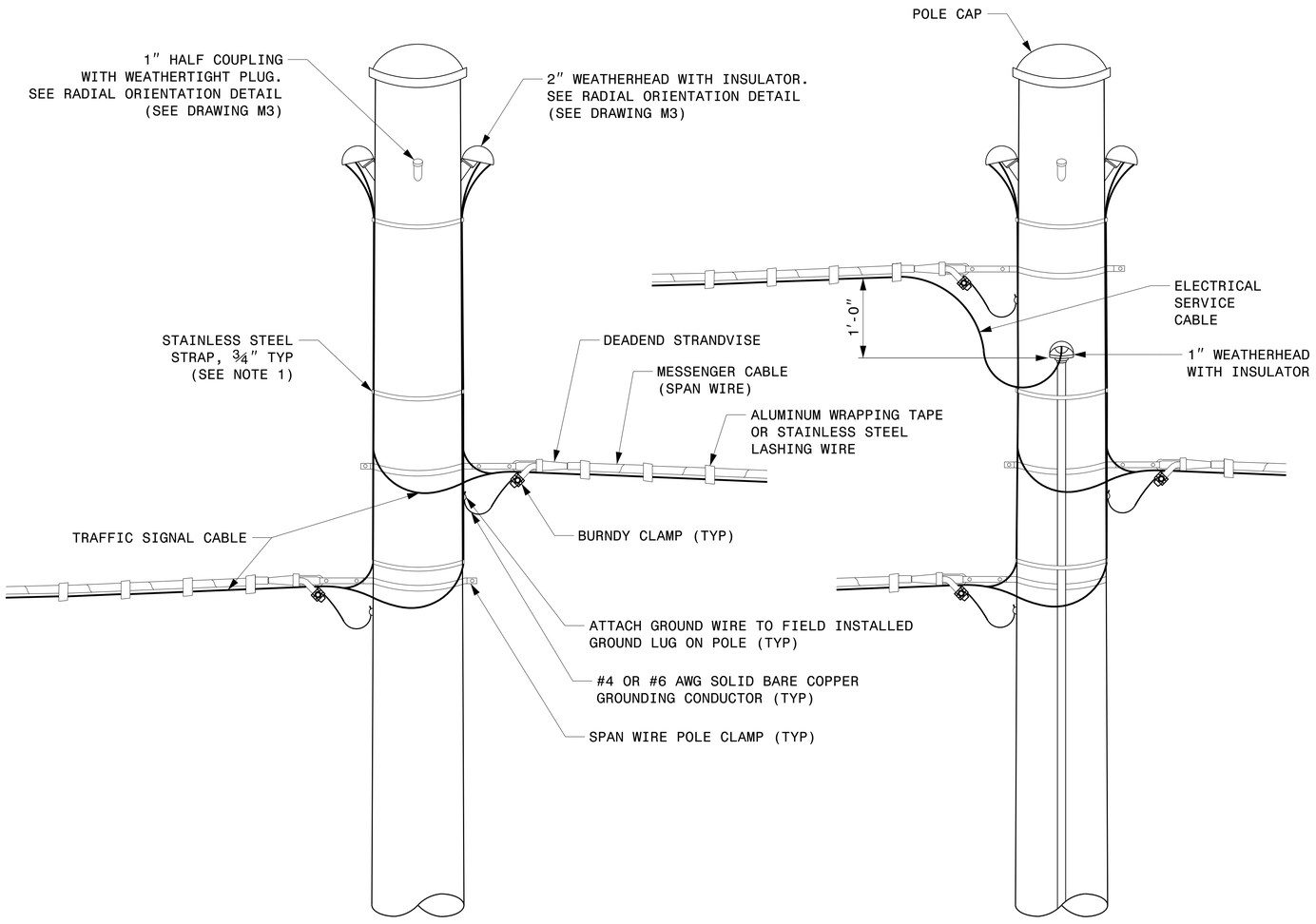

STRAIN POLE ATTACHMENTS

NOTES:

1. STRAP ALL SIGNAL CABLES TO THE SIDE OF THE POLE WITH ¾″ STAINLESS STEEL STRAPS WHEN THE DISTANCE BETWEEN SPAN WIRE ATTACHMENT CLAMP AND WEATHERHEADS EXCEEDS 3′-0″.
2. PROVIDE MINIMUM TWO SPAN WIRE POLE CLAMPS PER POLE.
3. IT IS PROHIBITED TO ATTACH TWO SPAN WIRES AT ONE POLE CLAMP.
4. FOR GENERAL REQUIREMENTS, REFER TO NCDOT STANDARD SPECIFICATIONS FOR ROADWAY AND STRUCTURES, JANUARY 2024.

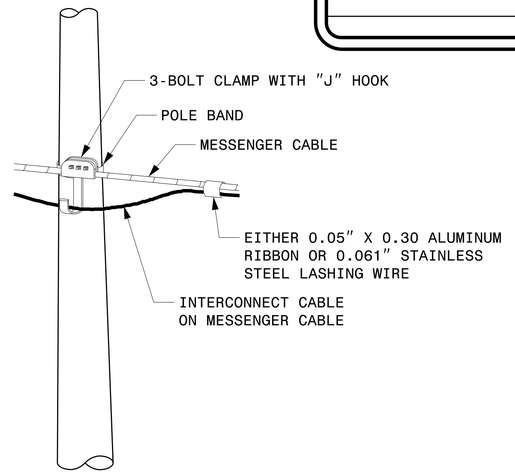

ATTACHMENT OF CABLE TO INTERMEDIATE METAL POLE

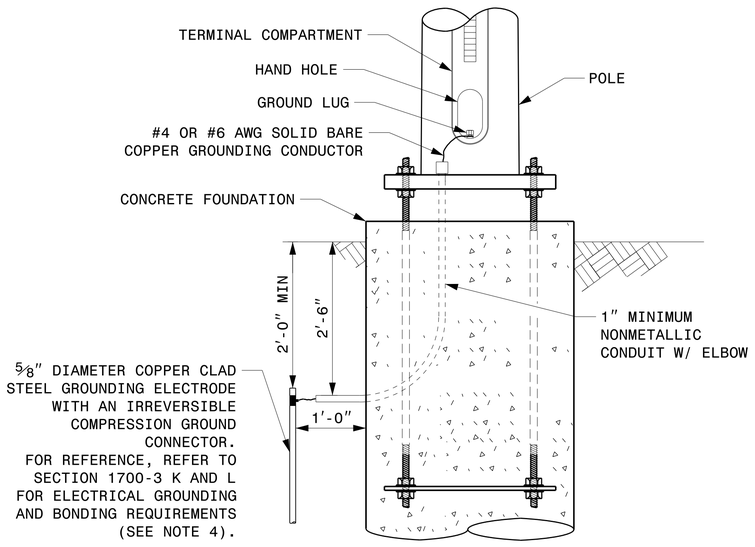

METAL POLE GROUNDING DETAIL FOR STRAIN POLE AND MAST ARM

Prepared In the Offices of:
Transportation Mobility and Safety Division
Signal Design Section
750 N.Greenfield Pkwy,Garner,NC 27529

SCALE
0 NA
NONE

Typical Fabrication Details
For
Strain Pole Attachments

PLAN DATE:	SEPTEMBER 2023	DESIGNED BY:	C.F. ANDREWS
PREPARED BY:	K.C. DURIGON	REVIEWED BY:	D.C. SARKAR

REVISIONS	INIT.	DATE

SEAL

NORTH CAROLINA PROFESSIONAL SEAL 036626 ENGINEER KEVIN C. DURIGON

DocuSigned by:
Kevin Durigon
SIGNATURE
4B23DC79B3784DA...
09/21/2023
DATE

03-OCT-2023 12:41
S:\ITS&SIGN\ITS Signals\Signal Design Sections\Structures\Drawings\2024 Metal Pole Std Drawings for LRFD\2024 Sig,MM Std. Fabrication Details-Strain Poles.dgn
kcdurigon

Construction Details – Foundations

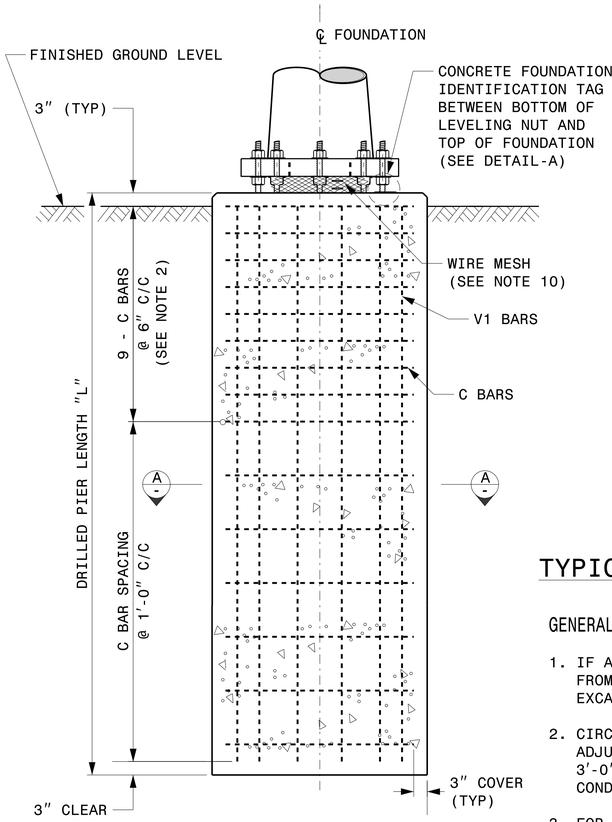

CONCRETE SHAFT ELEVATION

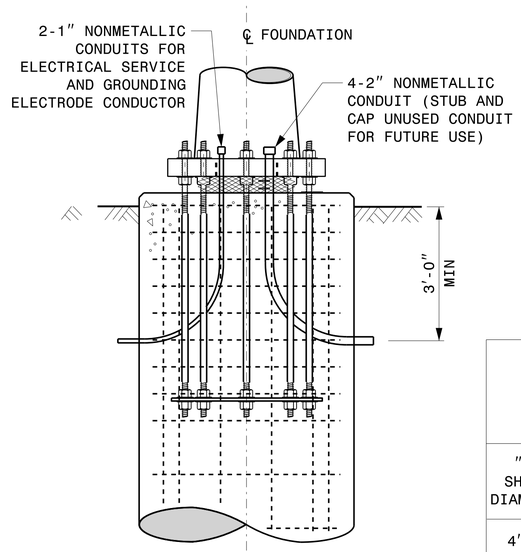

TYPICAL FOUNDATION CONDUIT DETAILS

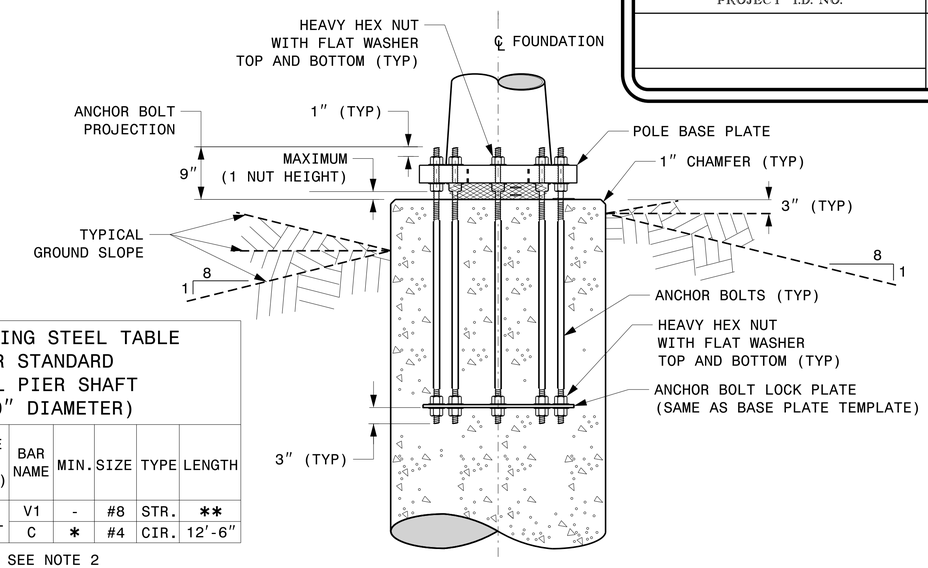

TYPICAL FOUNDATION ANCHOR BOLT DETAILS

(REINFORCING CAGE NOT SHOWN FOR CLARITY)

REINFORCING STEEL TABLE FOR STANDARD DRILL PIER SHAFT (4′-0″ DIAMETER)

"D" SHAFT DIAMETER	CONCRETE VOLUME (CU. YDS)	BAR NAME	MIN.	SIZE	TYPE	LENGTH
4′-0″	.465 X L	V1	-	#8	STR.	**
		C	*	#4	CIR.	12′-6″

* SEE NOTE 2
** SEE NOTE 3

GENERAL NOTES:

1. IF ACTUAL SUBSURFACE CONDITIONS DIFFER SIGNIFICANTLY FROM BORING DATA, CONTACT THE ENGINEER BEFORE EXCAVATING OR PLACING CONCRETE.
2. CIRCULAR TIE REINFORCING RINGS MAY BE VERTICALLY ADJUSTED BY +/-3″ AT A DEPTH BETWEEN 2′-0″ AND 3′-0″ TO FACILITATE THE INSTALLATION OF ELECTRICAL CONDUIT ENTERING IN THE CAGE.
3. FOR STANDARD FOUNDATIONS, SEE SHEET SIG. M8 FOR DETAILS. VERTICAL REINFORCING BARS (V1) MAY BE HORIZONTALLY ADJUSTED BY +/-3″ TO FACILITATE THE INSTALLATION OF ELECTRICAL CONDUIT ENTERING INTO THE CAGE.
4. PROVIDE 2″ TO 5″ FOUNDATION PROJECTION ABOVE GROUND LEVEL, DEPENDING ON THE GROUND SLOPE.
5. UNLESS OTHERWISE SHOWN, FOUNDATION DESIGNS ARE BASED ON NON-SLOPING LEVEL GROUND SURFACES WITH SLOPE RATIOS OF 8:1 (H:V) OR FLATTER. IF ACTUAL GROUND LINE SLOPES ARE STEEPER, CONTACT THE ENGINEER BEFORE EXCAVATING OR PLACING CONCRETE.
6. CONSTRUCT FOUNDATIONS IN ACCORDANCE WITH NCDOT STANDARD PROVISIONS SP09 R005- FOUNDATIONS AND ANCHOR ROD ASSEMBLIES FOR METAL POLES. ALL APPLICABLE 2024 NCDOT STANDARD SPECIFICATIONS ARE REFERENCED IN THIS PROVISION. REFER TO THE NCDOT RESOURCES/SPECIFICATIONS PAGE LOCATED ON THE CONNECT NCDOT WEBSITE.

   https://connect.ncdot.gov/resources/Specifications and Special Provisions.aspx
7. USE AIR ENTRAINED AA CONCRETE MIX WITH A COMPRESSION STRENGTH OF f′c=4500 psi (MIN) AFTER 28 DAYS.
8. USE ASTM A615 GRADE 60 DEFORMED BARS FOR ALL REINFORCING STEEL. MAINTAIN AT LEAST 3″ COVER ON ALL REINFORCEMENT.
9. LOCATE IDENTIFICATION TAG ON TOP OF THE FOUNDATION, DIRECTLY ABOVE THE CONDUIT'S ENTRY POINT.
10. PROVIDE TWO LAYERS OF 4 MESH GALVANIZED WELDED 23 GAUGE (0.025) 6″ WIDE AROUND PIPES UNDER THE BASE PLATE AND SECURE IT WITH TIES IF NECESSARY.
11. PREFERRED LOCATION FOR THE I.D. TAG IS AS SHOWN IN DETAIL-A: DIRECTLY ABOVE THE CONDUIT ENTERING THE FOUNDATION.

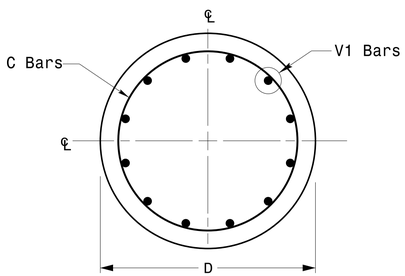

SECTION A-A

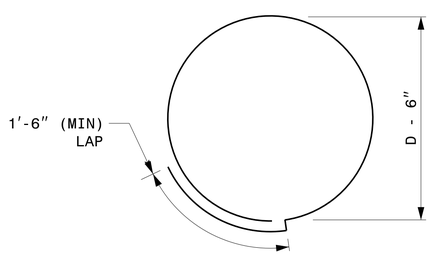

TYPICAL "C" BAR DETAIL

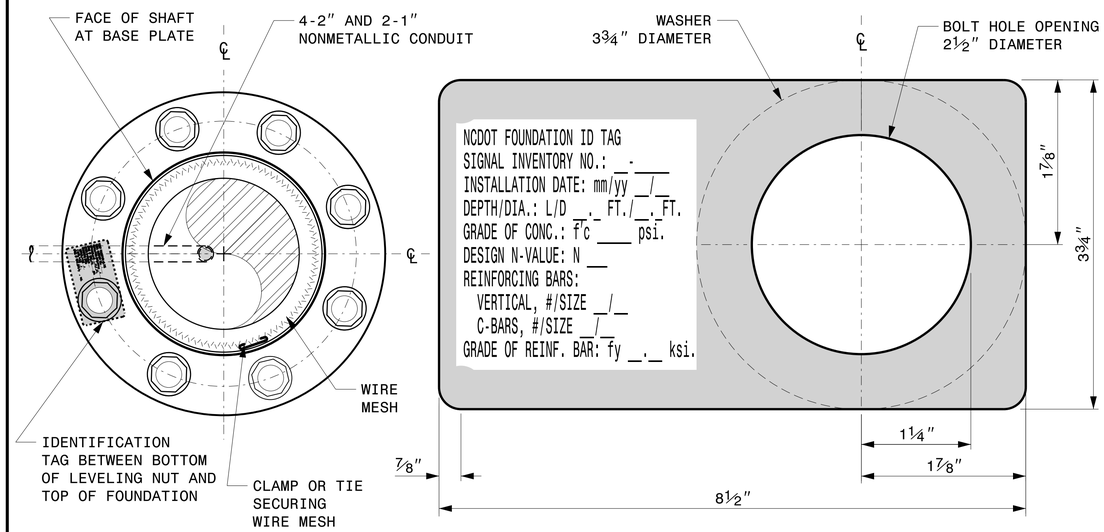

D = DIAMETER
L = LENGTH / DEPTH
mm = MONTH
yy = YEAR

DETAIL-A

CONCRETE FOUNDATION IDENTIFICATION TAG DETAILS

Prepared in the Offices of:
Transportation Mobility and Safety Division
Traffic Engineering Branch
Signal Design Section
750 N.Greenfield Pkwy.Garner,NC 27529

Construction Details For Foundations

PLAN DATE: SEPTEMBER 2023 DESIGNED BY: K.C. DURIGON
PREPARED BY: K.C. DURIGON REVIEWED BY: D.C. SARKAR

REVISIONS	INIT.	DATE

SCALE: 0 NA — NONE

SEAL
NORTH CAROLINA PROFESSIONAL SEAL 036626 ENGINEER KEVIN C. DURIGON

DocuSigned by: Kevin Durigon SIGNATURE 4B23DC79B3784DA... 09/21/2023 DATE

03-OCT-2023 12:45
S:\TSSGU\413 Signals\Design Section\Structures\Drawings\2024 Metal Pole Std Drawings for LRFD\2024 Sig.M7 Std. Construction Details-Strain Poles.dgn
kcdurigon

SOIL CONDITION

STANDARD STRAIN POLES						STANDARD FOUNDATIONS 48″ Diameter Drilled Pier Length (L) – Feet							Reinforcement			
			Reactions at the Pole Base			Clay				Sand			Longitudinal		Stirrups	
Case No.	Pole Height (Ft.)	Base Plate BC (In.)	Axial (kip)	Shear (kip)	Moment (ft–kip)	Medium N–Value 4–8	Stiff N–Value 9–15	Very Stiff N–Value 16–30	Hard N–Value >30	Loose N–Value 4–10	Medium N–Value 11–30	Dense N–Value >30	Bar Size (#)	Quantity (ea.)	Bar Size (#)	Spacing (in.)
S26L1	26	22	2	9	210	19.5	12.5	9	6.5	15.5	14.5	13	8	12	4	12
S26L2	26	23	2	10	240	19.5	12	9	6.5	15.5	14.5	13	8	12	4	12
S26L3	26	25	2	11	260	20.5	12	10	8	16	15	13	8	12	4	12
S30L1	30	22	2	9	230	19	11	9	7	15.5	14	12.5	8	12	4	12
S30L2	30	23	2	10	270	20	12	10	8	16	14.5	13	8	12	4	12
S30L3	30	25	2	11	290	21	12	10	8	17	15	13.5	8	12	4	12
S30H1	30	25	3	13	355	23	13	11	9	18	16.5	14.5	8	12	4	12
S30H2	30	29	3	15	405	25	14	11	9	19	17.5	15.5	8	14	4	12
S30H3	30	29	3	16	430	26	15	12	9	20	18	16	8	14	4	6
S35L1	35	22	3	8	260	19.5	12	10	8	15.5	14.5	13	8	12	4	12
S35L2	35	23	3	10	300	21	12	10	8	16.5	15	13.5	8	12	4	12
S35L3	35	25	3	10	320	21.5	13	10	8	17	15.5	14	8	12	4	12
S35H1	35	25	3	12	390	23.5	14	11	9	18	17	15	8	14	4	12
S35H2	35	29	4	14	460	26	15	12	9	20	18	16	8	14	4	6
S35H3	35	29	4	16	495	28.5	15	13.5	10	21.5	19	17	8	14	4	6

48″ DIAMETER FOUNDATION CONCRETE VOLUME (CUBIC YARDS) = (0.465) x DRILLED PIER LENGTH

GENERAL NOTES:

1. VALUES SHOWN IN THE "REACTIONS AT THE POLE BASE" COLUMN REPRESENT THE MINIMUM ACCEPTABLE CAPACITY ALLOWED FOR DESIGN USING A COMBINED FORCE RATIO (CFR) OF 1.00.
2. USE CHAIRS AND SPACERS TO MAINTAIN PROPER CLEARANCE.
3. FOR FOUNDATION, ALWAYS USE AIR-ENTRAINED CONCRETE MIX.

FOUNDATION SELECTION:

1. PERFORM A STANDARD PENETRATION TEST AT EACH PROPOSED FOUNDATION SITE TO DETERMINE "N" VALUE.
2. SELECT THE APPROPRIATE WIND ZONE FROM M1 DRAWING.
3. SELECT THE SOIL TYPE (CLAY OR SAND) THAT BEST DESCRIBES THE SOIL CHARACTERISTICS.
4. GET THE APPROPRIATE STANDARD POLE CASE NUMBER FROM THE PLANS OR FROM THE ENGINEER.
5. SELECT THE APPROPRIATE COLUMN UNDER "STANDARD FOUNDATIONS" BASED ON SOIL TYPE AND "N" VALUE. SELECT THE APPROPRIATE ROW BASED ON THE POLE LOAD CASE.
6. THE FOUNDATION DEPTH IS THE VALUE SHOWN IN THE "STANDARD FOUNDATIONS" CATEGORY WHERE THE COLUMN AND THE ROW INTERSECT.
7. USE CONSTRUCTION PROCEDURES AND DESIGN METHODS PRESCRIBED BY FHWA-NHI-10-016 MANUAL FOR DRILLED SHAFTS.

PROJECT I.D. NO.	SHEET NO.
	Sig.M8

Standard Strain Pole Foundation – All Soil Conditions

Prepared in the Offices of:
Transportation Mobility and Safety Division
Signal Design Section
750 N.Greenfield Pkwy,Garner,NC 27529

SCALE 0 NA NONE

Standard Strain Pole Foundation for All Soil Conditions

PLAN DATE: SEPTEMBER 2023 DESIGNED BY: K.C. DURIGON
PREPARED BY: K.C. DURIGON REVIEWED BY: D.C. SARKAR

REVISIONS	INIT.	DATE

SEAL
NORTH CAROLINA PROFESSIONAL SEAL 036626 ENGINEER KEVIN C. DURIGON

DocuSigned by:
Kevin Durigon
SIGNATURE
4B23DC79B3784DA...
09/21/2023
DATE

03-OCT-2023 12:48
S:\NTISSDW\ITS Signals\Signal Design Section\Structures\Drawings\2024 Metal Pole Std Drawings for LRFD\2024 Sig_M8 Std. Strain Pole Found.-Saturated Soil Condition.dgn
kcdurigon

PROJECT I.D. NO.	SHEET NO.
	Sig.M9

Fabrication Details – CCTV Camera Poles

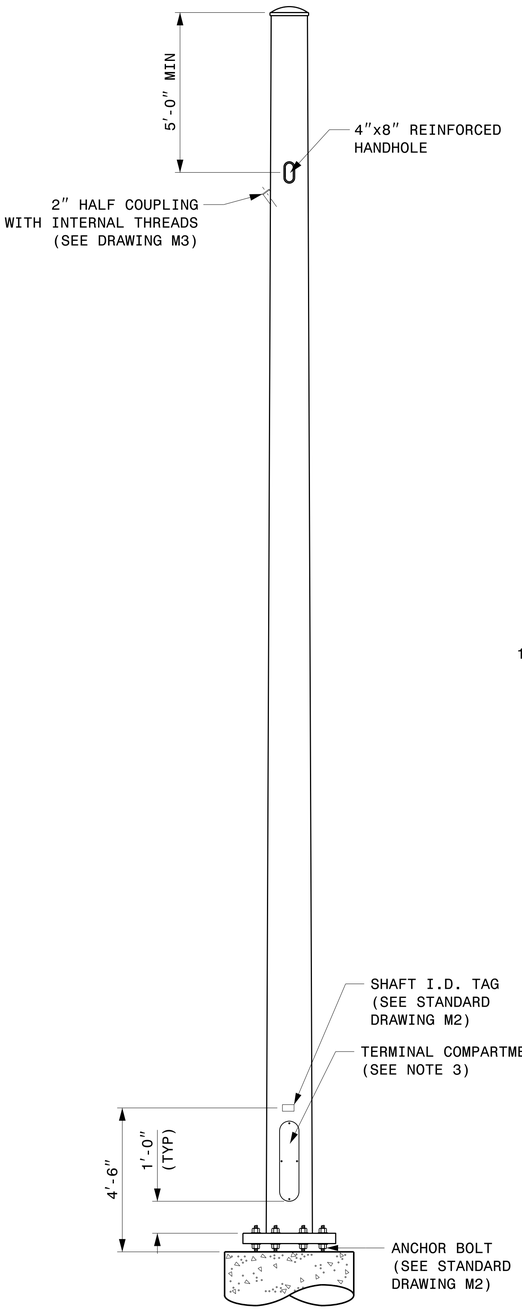

CCTV CAMERA POLE
(NOT TO SCALE)

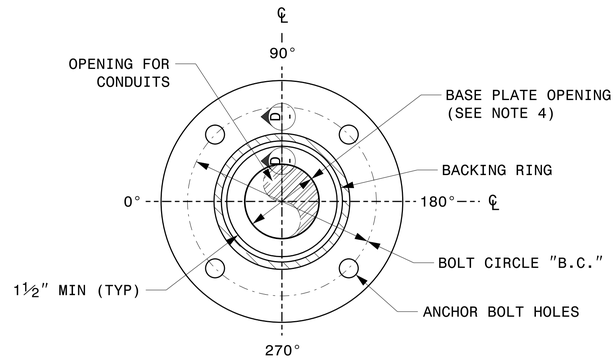

4 BOLT PATTERN
FOR POLES UP TO 40'

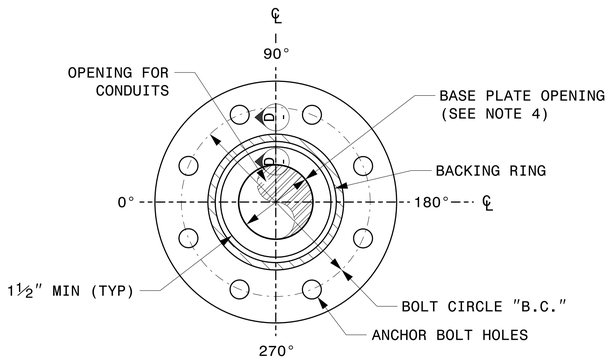

8 BOLT PATTERN
FOR POLES TALLER THAN 40'

BASE PLATE DETAILS

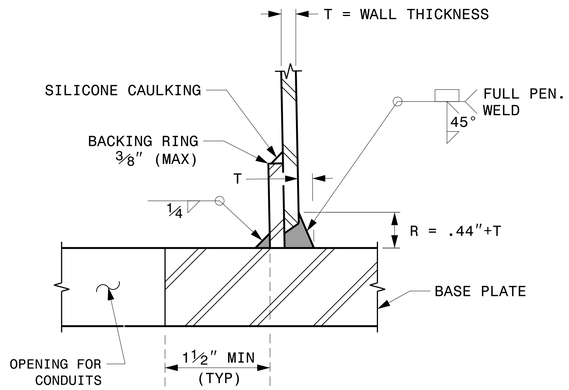

SECTION D-D
(POLE ATTACHMENT TO BASE PLATE)

FULL-PENETRATION
GROOVE WELD DETAIL

NOTES:

1. THIS DRAWING PROVIDES BASIC DETAILS FOR CCTV POLES. PROJECT REQUIREMENTS MAY REQUIRE SPECIAL FACTORY PREPS THAT ARE NOT SHOWN ON THESE DETAILS.
2. DETAILS FOR INTERNAL CAMERA LOWERING SYSTEMS ARE NOT SHOWN.
3. POLE MOUNTED CABINETS MAY REQUIRE MODIFICATIONS TO THE LOWER HANDHOLE OPENING TO MOUNT CABINETS. 4" X 8" REINFORCED HANDHOLES ARE ACCEPTABLE OPTIONS, AND MAY BE PREFERRED.
4. OPENING IN POLE BASE SHALL BE EQUAL TO POLE BASE INSIDE DIAMETER MINUS 3½" BUT SHALL NOT BE LESS THAN 8½".
5. USE COMPACT SECTION CRITERIA D/T RATIO PER AASHTO LTS-LRFD 1ST EDITION SECTION 5.7.2.

Prepared in the Offices of:
Transportation Mobility and Safety Division
Signal Design Section
750 N.Greenfield Pkwy.Garner,NC 27529

SCALE
0 NA
NONE

Typical Fabrication Details
For
CCTV Poles

PLAN DATE:	SEPTEMBER 2023	DESIGNED BY:	K.C. DURIGON
PREPARED BY:	K.C. DURIGON	REVIEWED BY:	C.F. ANDREWS

REVISIONS	INIT.	DATE

SEAL
NORTH CAROLINA PROFESSIONAL SEAL 036626 ENGINEER KEVIN C. DURIGON

DocuSigned by:
Kevin Durigon
SIGNATURE
4B23DC79B3784DA...
09/21/2023
DATE

03-OCT-2023 12:51
S:\#ITSSIG\#ITS\Signals\#Signal Design Section\#Structures\#Drawings\#2024 Metal Pole Std Drawings for LRFD\#2024 Sig.M9 Fabrication Details - CCTV Poles.dgn
kcdurigon

PROJECT REFERENCE NO.	SHEET NO.
U-5757	SCP-1

REMOVE EXISTING ANTENNA AND REPLACE WITH NEW 8.5 DB GAIN YAGI ANTENNA VERTICALLY POLARIZED AIMED TOWARD INTERSECTION 09–0735.

ATTACH ANTENNA ALONG MAST ARM A MINIMUM OF 6 FEET AWAY FROM THE VERTICAL SHAFT MEMBER. SEE NOTES 1B AND 1D.

INSTALL ETHERNET EDGE SWITCH

REMOVE EXISTING RADIO AND REPLACE WITH NEW 900MHZ EITHERNET RADIO

INSTALL DEPARTMENT SUPPLIED CELL MODEM AND ANTENNAS

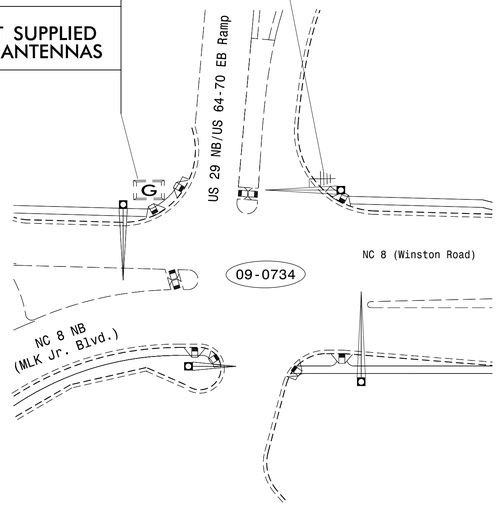

REMOVE EXISTING ANTENNA AND REPLACE WITH NEW 8.5 DB GAIN YAGI ANTENNA VERTICALLY POLARIZED AIMED TOWARD INTERSECTION 09–0734.

ATTACH ANTENNA ALONG MAST ARM A MINIMUM OF 6 FEET AWAY FROM THE VERTICAL SHAFT MEMBER. SEE NOTES 1B AND 1D.

INSTALL ETHERNET EDGE SWITCH

REMOVE EXISTING RADIO AND REPLACE WITH NEW 900MHZ EITHERNET RADIO

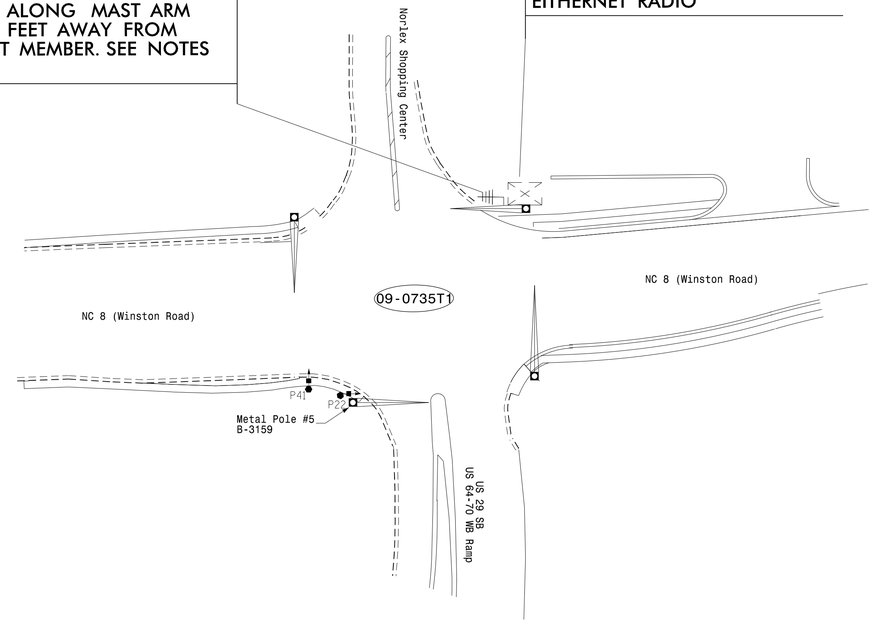

NOTES FOR WIRELESS COMMUNICATIONS:

1. INSTALL COAXIAL CABLE:
   - A. ON WOOD POLES, REQUIRING A NEW RIGID GALVANIZED STEEL RISER, INSTALL A 2" RISER WITH WEATHERHEAD AND ROUTE THE COAXIAL CABLE TO THE ANTENNA.
   - B. ON METAL POLES WITH MAST ARMS, RUN COAXIAL CABLE UP THROUGH THE POLE AND OUT THE MAST ARM; FIELD DRILL A 1/2" HOLE UP THROUGH THE BOTTOM OF MAST ARM FOR INSTALLATION OF THE COAXIAL CABLE TO THE ANTENNA. SEE "METAL POLE SUPPORTS" IN THE PSP'S FOR MORE INFORMATION.
   - C. ON METAL STRAIN POLES, RUN COAXIAL CABLE UP THROUGH THE POLE AND OUT THE WEATHERHEAD AND ROUTE THE COAXIAL CABLE TO THE ANTENNA.
   - D. BETWEEN THE POINT OF EXITING THE RISER, METAL POLE OR MAST ARM AND THE ANTENNA, SECURE THE COAXIAL CABLE TO THE STRUCTURE USING 3/4" STAINLESS STEEL STRAPS EVERY 12". SEE "METAL POLE SUPPORTS" IN THE PSP'S FOR MORE INFORMATION.
2. IF AN EXISTING 2" SPARE RIGID GALVANIZED STEEL RISER IS AVAILABLE, INSTALL THE COAXIAL CABLE IN THE SPARE RISER WITH A 2" WEATHERHEAD
3. INSTALL WIRELESS ANTENNA ON POLE WITH RF WARNING SIGN. (NOTE: RF WARNING SIGN NOT REQUIRED WHEN ANTENNA IS INSTALLED ON AN NCDOT–OWNED POLE.)
4. MAINTAIN PROPER CLEARANCE FROM ALL UTILITIES PER THE NATIONAL ELECTRICAL SAFETY CODE.
5. INSTALL WIRELESS RADIO MODEM WITH EXTERIOR DISCONNECT SWITCH LOCATED ON CABINET. (NOTE: RF ANTENNA DISCONNECT SWITCH AND DECAL ARE NOT REQUIRED WHEN THE ANTENNA IS INSTALLED ON AN NCDOT–OWNED POLE.)
6. REFERENCE THE 2024 ROADWAY STANDARD DRAWINGS, SECTION 1736.01.
7. CELL MODEM TO BE SUPPLIED BY THE DEPARTMENT. CONTACT THE DIVISION TRAFFIC ENGINEER AT (336) 747–7800 TO REQUEST THE CELL MODEM. ALLOW 8 WEEK LEAD TIME BEFORE ANTICIPATED DEPLOYMENT.

LEGEND

- YAGI ANTENNA (DOUBLE) FOR REPEATER OPERATION
- NEW YAGI ANTENNA (SINGLE)
- EXISTING YAGI ANTENNA (SINGLE)
- OMNI ANTENNA
- EXISTING CONTROLLER AND CABINET
- GATEWAY RADIO LOCATION
- XX-XXXX SIGNAL INVENTORY NUMBER
- NEW METAL POLE W/MAST ARM
- EXISTING METAL POLE W/MAST ARM
- EXISTING WOOD POLE
- NEW METAL POLE
- SP SIGNAL POLE
- EXISTING METAL POLE
- NEW OVERSIZED JUNCTION BOX
- EXISTING OVERSIZED JUNCTION BOX
- EXISTING CONDUIT
- NEW CONDUIT
- EXT EXT EXISTING COMMUNICATIONS CABLE

TRANSYSTEMS
1 Glenwood Avenue
Raleigh, NC 27603
Tel:919.789.9977
Fax:919.789.9591
License: F-0453

Signal System #: D09-19_Lexington

DOCUMENT NOT CONSIDERED FINAL UNLESS ALL SIGNATURES COMPLETED

Prepared for the Offices of:

NORTH CAROLINA DEPARTMENT OF TRANSPORTATION Transportation Mobility and Safety Division Traffic Engineering Branch

750 N. Greenfield Pkwy., Garner, NC 27529

WIRELESS COMMUNICATION PLAN

DIVISION 9 DAVIDSON CO. LEXINGTON

PLAN DATE: MAY 2024 REVIEWED BY: G.G. MURR, JR.

PREPARED BY: B.E. WYNN

SCALE: N/A

REVISIONS	INIT.	DATE

SEAL
NORTH CAROLINA PROFESSIONAL SEAL 14543 ENGINEER
GENE G. MURR JR.

SIGNATURE DATE

CADD Filename: U-5757_SCP

PROJECT REFERENCE NO.	SHEET NO.
U-5757	SCP-2

REMOVE EXISTING ANTENNA AND REPLACE WITH NEW 8.5 DB GAIN YAGI ANTENNA VERTICALLY POLARIZED AIMED TOWARD INTERSECTION 09–0734.

ATTACH ANTENNA ALONG MAST ARM A MINIMUM OF 6 FEET AWAY FROM THE VERTICAL SHAFT MEMBER. SEE NOTES 1B & 1D.

INSTALL ETHERNET EDGE SWITCH

REMOVE EXISTING RADIO AND REPLACE WITH NEW 900MHZ EITHERNET RADIO

RELOCATE EXISTING RADIO AND ETHERNET EDGE SWITCH TO NEW CABINET.

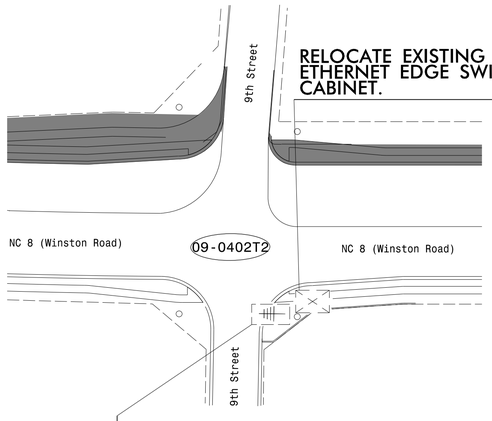

RELOCATE THE EXISTING ANTENNA AND INSTALL ON NEW TEMPORARY WOOD POLE. SEE NOTES 1A AND 1D.

MOUNT THE ANTENNA IN A VERTCALLY POLARIZED ORIENTATION AND AIM TOWARD INTERSECTION 09–0734.

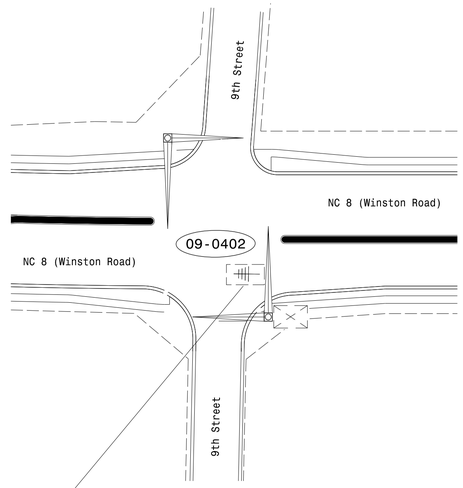

RELOCATE THE EXISTING ANTENNA AND ATTACH TO MP#2 MAST ARM "A" A MINIMUM OF 6 FEET AWAY FROM THE VERTICAL SHAFT MEMBER. SEE NOTES 1B AND 1D.

MOUNT THE ANTENNA IN A VERTCALLY POLARIZED ORIENTATION AND AIM TOWARD INTERSECTION 09–0734.

NOTES FOR WIRELESS COMMUNICATIONS:

1. INSTALL COAXIAL CABLE:
   - A. ON WOOD POLES, REQUIRING A NEW RIGID GALVANIZED STEEL RISER, INSTALL A 2" RISER WITH WEATHERHEAD AND ROUTE THE COAXIAL CABLE TO THE ANTENNA.
   - B. ON METAL POLES WITH MAST ARMS, RUN COAXIAL CABLE UP THROUGH THE POLE AND OUT THE MAST ARM; FIELD DRILL A 1/2" HOLE UP THROUGH THE BOTTOM OF MAST ARM FOR INSTALLATION OF THE COAXIAL CABLE TO THE ANTENNA. SEE "METAL POLE SUPPORTS" IN THE PSP'S FOR MORE INFORMATION.
   - C. ON METAL STRAIN POLES, RUN COAXIAL CABLE UP THROUGH THE POLE AND OUT THE WEATHERHEAD AND ROUTE THE COAXIAL CABLE TO THE ANTENNA.
   - D. BETWEEN THE POINT OF EXITING THE RISER, METAL POLE OR MAST ARM AND THE ANTENNA, SECURE THE COAXIAL CABLE TO THE STRUCTURE USING 3/4" STAINLESS STEEL STRAPS EVERY 12". SEE "METAL POLE SUPPORTS" IN THE PSP'S FOR MORE INFORMATION.
2. IF AN EXISTING 2" SPARE RIGID GALVANIZED STEEL RISER IS AVAILABLE, INSTALL THE COAXIAL CABLE IN THE SPARE RISER WITH A 2" WEATHERHEAD
3. INSTALL WIRELESS ANTENNA ON POLE WITH RF WARNING SIGN. (NOTE: RF WARNING SIGN NOT REQUIRED WHEN ANTENNA IS INSTALLED ON AN NCDOT–OWNED POLE.)
4. MAINTAIN PROPER CLEARANCE FROM ALL UTILITIES PER THE NATIONAL ELECTRICAL SAFETY CODE.
5. INSTALL WIRELESS RADIO MODEM WITH EXTERIOR DISCONNECT SWITCH LOCATED ON CABINET. (NOTE: RF ANTENNA DISCONNECT SWITCH AND DECAL ARE NOT REQUIRED WHEN THE ANTENNA IS INSTALLED ON AN NCDOT–OWNED POLE.)
6. REFERENCE THE 2024 ROADWAY STANDARD DRAWINGS, SECTION 1736.01.

LEGEND

- YAGI ANTENNA (DOUBLE) FOR REPEATER OPERATION
- NEW YAGI ANTENNA (SINGLE)
- EXISTING YAGI ANTENNA (SINGLE)
- OMNI ANTENNA
- EXISTING CONTROLLER AND CABINET
- GATEWAY RADIO LOCATION
- XX-XXXX SIGNAL INVENTORY NUMBER
- NEW METAL POLE W/MAST ARM
- EXISTING METAL POLE W/MAST ARM
- EXISTING WOOD POLE
- NEW METAL POLE
- SP SIGNAL POLE
- EXISTING METAL POLE
- NEW OVERSIZED JUNCTION BOX
- EXISTING OVERSIZED JUNCTION BOX
- EXISTING CONDUIT
- NEW CONDUIT
- EXISTING COMMUNICATIONS CABLE

TRANSYSTEMS
1 Glenwood Avenue
Raleigh, NC 27603
Tel:919.789.9977
Fax:919.789.9591
License: F-0453

Signal System #: D09-19_Lexington

DOCUMENT NOT CONSIDERED FINAL UNLESS ALL SIGNATURES COMPLETED

Prepared for the Offices of:

NORTH CAROLINA DEPARTMENT OF TRANSPORTATION

250 N. Greenfield Pkwy., Garner, NC 27529

WIRELESS COMMUNICATION PLAN

DIVISION 9 DAVIDSON CO. LEXINGTON

PLAN DATE: MAY 2024 REVIEWED BY: G.G. MURR, JR.

PREPARED BY: B.E. WYNN

SCALE: N/A

REVISIONS	INIT.	DATE

SEAL
NORTH CAROLINA PROFESSIONAL SEAL 14543 ENGINEER GLENN G. MURR, JR.

SIGNATURE DATE

CADD Filename: U-5757_SCP

PROJECT REFERENCE NO.	SHEET NO.
U-5757	SCP-3

REMOVE EXISTING ANTENNA AND REPLACE WITH NEW 8.5 DB GAIN YAGI ANTENNA AND ATTACH TO NEW WOOD POLE. SEE NOTES 1A AND 1D.

MOUNT THE ANTENNA IN A VERTCALLY POLARIZED ORIENTATION AND AIM TOWARD INTERSECTION 09–0734.

INSTALL ETHERNET EDGE SWITCH IN NEW TRAFFIC SIGNAL CABINET.

INSTALL NEW 900MHZ ETHERNET RADIO

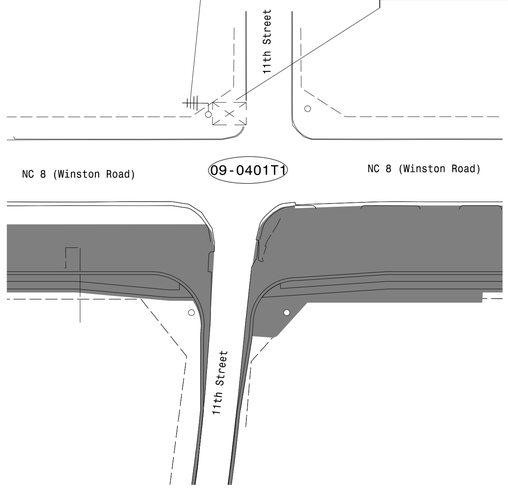

RELOCATE THE EXISTING ANTENNA AND ATTACH TO MP#2 MAST ARM "A" A MINIMUM OF 6 FEET AWAY FROM THE VERTICAL SHAFT MEMBER. SEE NOTE 1B AND 1D.

MOUNT THE ANTENNA IN A VERTCALLY POLARIZED ORIENTATION AND AIM TOWARD INTERSECTION 09–0734.

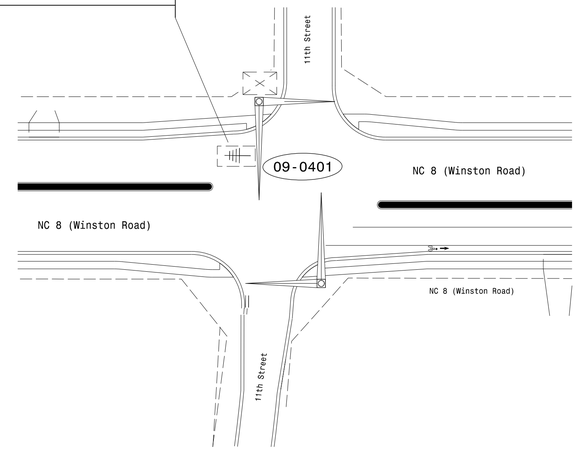

NOTES FOR WIRELESS COMMUNICATIONS:

1. INSTALL COAXIAL CABLE:
   - A. ON WOOD POLES, REQUIRING A NEW RIGID GALVANIZED STEEL RISER, INSTALL A 2" RISER WITH WEATHERHEAD AND ROUTE THE COAXIAL CABLE TO THE ANTENNA.
   - B. ON METAL POLES WITH MAST ARMS, RUN COAXIAL CABLE UP THROUGH THE POLE AND OUT THE MAST ARM; FIELD DRILL A 1⁄2" HOLE UP THROUGH THE BOTTOM OF MAST ARM FOR INSTALLATION OF THE COAXIAL CABLE TO THE ANTENNA. SEE "METAL POLE SUPPORTS" IN THE PSP'S FOR MORE INFORMATION.
   - C. ON METAL STRAIN POLES, RUN COAXIAL CABLE UP THROUGH THE POLE AND OUT THE WEATHERHEAD AND ROUTE THE COAXIAL CABLE TO THE ANTENNA.
   - D. BETWEEN THE POINT OF EXITING THE RISER, METAL POLE OR MAST ARM AND THE ANTENNA, SECURE THE COAXIAL CABLE TO THE STRUCTURE USING 3⁄4" STAINLESS STEEL STRAPS EVERY 12". SEE "METAL POLE SUPPORTS" IN THE PSP'S FOR MORE INFORMATION.
2. IF AN EXISTING 2" SPARE RIGID GALVANIZED STEEL RISER IS AVAILABLE, INSTALL THE COAXIAL CABLE IN THE SPARE RISER WITH A 2" WEATHERHEAD
3. INSTALL WIRELESS ANTENNA ON POLE WITH RF WARNING SIGN. (NOTE: RF WARNING SIGN NOT REQUIRED WHEN ANTENNA IS INSTALLED ON AN NCDOT–OWNED POLE.)
4. MAINTAIN PROPER CLEARANCE FROM ALL UTILITIES PER THE NATIONAL ELECTRICAL SAFETY CODE.
5. INSTALL WIRELESS RADIO MODEM WITH EXTERIOR DISCONNECT SWITCH LOCATED ON CABINET. (NOTE: RF ANTENNA DISCONNECT SWITCH AND DECAL ARE NOT REQUIRED WHEN THE ANTENNA IS INSTALLED ON AN NCDOT–OWNED POLE.)
6. REFERENCE THE 2024 ROADWAY STANDARD DRAWINGS, SECTION 1736.01.

LEGEND

- YAGI ANTENNA (DOUBLE) FOR REPEATER OPERATION
- NEW YAGI ANTENNA (SINGLE)
- EXISTING YAGI ANTENNA (SINGLE)
- OMNI ANTENNA
- EXISTING CONTROLLER AND CABINET
- GATEWAY RADIO LOCATION
- XX-XXXX SIGNAL INVENTORY NUMBER
- NEW METAL POLE W/MAST ARM
- EXISTING METAL POLE W/MAST ARM
- EXISTING WOOD POLE
- NEW METAL POLE
- SP SIGNAL POLE
- EXISTING METAL POLE
- NEW OVERSIZED JUNCTION BOX
- EXISTING OVERSIZED JUNCTION BOX
- EXISTING CONDUIT
- NEW CONDUIT
- EXISTING COMMUNICATIONS CABLE

TRANSYSTEMS
1 Glenwood Avenue
Raleigh, NC 27603
Tel:919.789.9977
Fax:919.789.9591
License: F-0453

Signal System #: D09-19_Lexington

DOCUMENT NOT CONSIDERED FINAL UNLESS ALL SIGNATURES COMPLETED

Prepared for the Offices of:

750 N. Greenfield Pkwy., Garner, NC 27529

WIRELESS COMMUNICATION PLAN

DIVISION 9 DAVIDSON CO. LEXINGTON

PLAN DATE: MAY 2024 REVIEWED BY: G.G. MURR, JR.

PREPARED BY: B.E. WYNN

SCALE: N/A

REVISIONS	INIT.	DATE

SEAL
NORTH CAROLINA PROFESSIONAL SEAL 14543 ENGINEER GENE G. MURR, JR.

SIGNATURE DATE

CADD Filename: U-5757_SCP

PROJECT REFERENCE NO.	SHEET NO.
U-5757	SCP-4

INSTALL ETHERNET EDGE SWITCH IN EXISTING CABINET

REMOVE EXISTING RADIO AND REPLACE WITH NEW 900MHZ EITHERNET RADIO

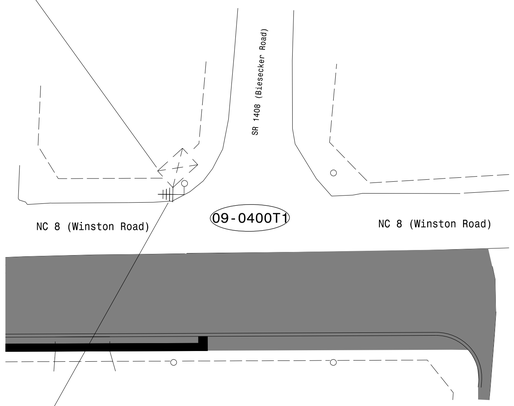

REMOVE EXISTING ANTENNA AND REPLACE WITH NEW 8.5 DB GAIN YAGI ANTENNA AND ATTACH TO NEW TEMPORARY WOOD POLE. SEE NOTES 1A AND 1D.

MOUNT THE ANTENNA IN A VERTCALLY POLARIZED ORIENTATION AND AIM TOWARD INTERSECTION 09–0734.

RELOCATE THE EXISTING ANTENNA AND ATTACH TO MP#1 MAST ARM A MINIMUM OF 6 FEET AWAY FROM THE VERTICAL SHAFT MEMBER. SEE NOTES 1B AND 1D.

MOUNT THE ANTENNA IN A VERTCALLY POLARIZED ORIENTATION AND AIM TOWARD INTERSECTION 09–0734.

RELOCATE EXISTING RADIO AND ETHERNET EDGE SWITCH TO NEW CABINET.

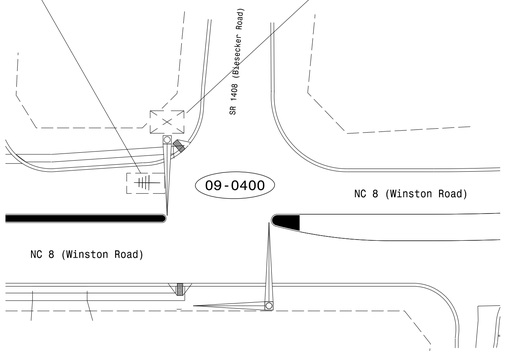

INSTALL ETHERNET EDGE SWITCH IN EXISTING CABINET

REMOVE EXISTING RADIO AND REPLACE WITH NEW 900MHZ EITHERNET RADIO

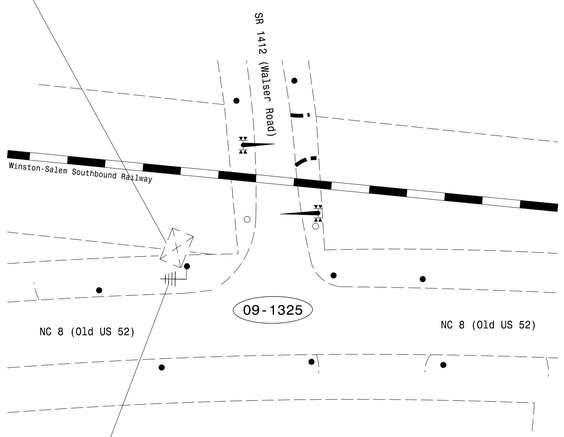

REMOVE EXISTING ANTENNA AND REPLACE WITH NEW 8.5 DB GAIN YAGI ANTENNA AND ATTACH TO SAME WOOD POLE. SEE NOTE 1A.

INSTALL NEW COAXIAL CABLE IN EXISTING 2" RISER. IN THE CASE A NEW IS REQUIRED, SEE NOTES 1A AND 1D.

MOUNT THE ANTENNA IN A VERTCALLY POLARIZED ORIENTATION AND AIM TOWARD INTERSECTION 09–0734.

NOTES FOR WIRELESS COMMUNICATIONS:

1. INSTALL COAXIAL CABLE:
   - A. ON WOOD POLES, REQUIRING A NEW RIGID GALVANIZED STEEL RISER, INSTALL A 2" RISER WITH WEATHERHEAD AND ROUTE THE COAXIAL CABLE TO THE ANTENNA.
   - B. ON METAL POLES WITH MAST ARMS, RUN COAXIAL CABLE UP THROUGH THE POLE AND OUT THE MAST ARM; FIELD DRILL A 1⁄2" HOLE UP THROUGH THE BOTTOM OF MAST ARM FOR INSTALLATION OF THE COAXIAL CABLE TO THE ANTENNA. SEE "METAL POLE SUPPORTS" IN THE PSP'S FOR MORE INFORMATION.
   - C. ON METAL STRAIN POLES, RUN COAXIAL CABLE UP THROUGH THE POLE AND OUT THE WEATHERHEAD AND ROUTE THE COAXIAL CABLE TO THE ANTENNA.
   - D. BETWEEN THE POINT OF EXITING THE RISER, METAL POLE OR MAST ARM AND THE ANTENNA, SECURE THE COAXIAL CABLE TO THE STRUCTURE USING 3⁄4" STAINLESS STEEL STRAPS EVERY 12". SEE "METAL POLE SUPPORTS" IN THE PSP'S FOR MORE INFORMATION.
2. IF AN EXISTING 2" SPARE RIGID GALVANIZED STEEL RISER IS AVAILABLE, INSTALL THE COAXIAL CABLE IN THE SPARE RISER WITH A 2" WEATHERHEAD
3. INSTALL WIRELESS ANTENNA ON POLE WITH RF WARNING SIGN. (NOTE: RF WARNING SIGN NOT REQUIRED WHEN ANTENNA IS INSTALLED ON AN NCDOT–OWNED POLE.)
4. MAINTAIN PROPER CLEARANCE FROM ALL UTILITIES PER THE NATIONAL ELECTRICAL SAFETY CODE.
5. INSTALL WIRELESS RADIO MODEM WITH EXTERIOR DISCONNECT SWITCH LOCATED ON CABINET. (NOTE: RF ANTENNA DISCONNECT SWITCH AND DECAL ARE NOT REQUIRED WHEN THE ANTENNA IS INSTALLED ON AN NCDOT–OWNED POLE.)
6. REFERENCE THE 2024 ROADWAY STANDARD DRAWINGS, SECTION 1736.01.

LEGEND

- YAGI ANTENNA (DOUBLE) FOR REPEATER OPERATION
- NEW YAGI ANTENNA (SINGLE)
- EXISTING YAGI ANTENNA (SINGLE)
- OMNI ANTENNA
- EXISTING CONTROLLER AND CABINET GATEWAY RADIO LOCATION
- XX-XXXX SIGNAL INVENTORY NUMBER
- NEW METAL POLE W/MAST ARM
- EXISTING METAL POLE W/MAST ARM
- EXISTING WOOD POLE
- NEW METAL POLE
- SP SIGNAL POLE
- EXISTING METAL POLE
- NEW OVERSIZED JUNCTION BOX
- EXISTING OVERSIZED JUNCTION BOX
- EXISTING CONDUIT
- NEW CONDUIT
- EXT EXISTING COMMUNICATIONS CABLE

TRANSYSTEMS
1 Glenwood Avenue
Raleigh, NC 27603
Tel:919.789.9977
Fax:919.789.9591
License: F-0453

Signal System #: D09-19_Lexington

DOCUMENT NOT CONSIDERED FINAL UNLESS ALL SIGNATURES COMPLETED

Prepared for the Offices of:
Transportation Mobility and Safety Division
NORTH CAROLINA DEPARTMENT OF TRANSPORTATION
750 N. Greenfield Pkwy., Garner, NC 27529

WIRELESS COMMUNICATION PLAN

DIVISION 9 DAVIDSON CO. LEXINGTON

PLAN DATE: MAY 2024 REVIEWED BY: G.G. MURR, JR.

PREPARED BY: B.E. WYNN

SCALE: N/A

REVISIONS	INIT.	DATE

SEAL
NORTH CAROLINA PROFESSIONAL SEAL 14543 ENGINEER GENE G. MURR JR.

SIGNATURE DATE

CADD Filename: U-5757_SCP