TIP PROJECT: BR-0097

STATE OF NORTH CAROLINA
DIVISION OF HIGHWAYS

T.I.P. NO.	SHEET NO.
BR-0097	UO-1

UTILITIES BY OTHERS PLANS
ROCKINGHAM COUNTY

NOTE:
ALL UTILITY WORK SHOWN ON THIS SHEET IS DONE BY OTHERS.
NO PAYMENT WILL BE MADE TO THE CONTRACTOR FOR UTILITY WORK SHOWN ON THIS SHEET.

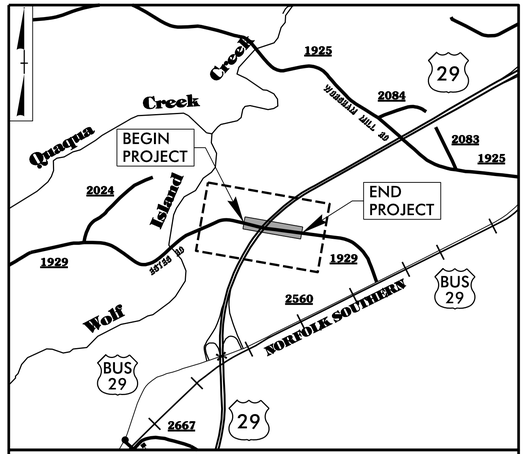

VICINITY MAP
(NOT TO SCALE)

LOCATION: BRIDGE NO. 780178 ON SR 1929 (ESTES RD) OVER US 29

TYPE OF WORK: UTILITIES BY OTHERS

NAD 83/NA 2011

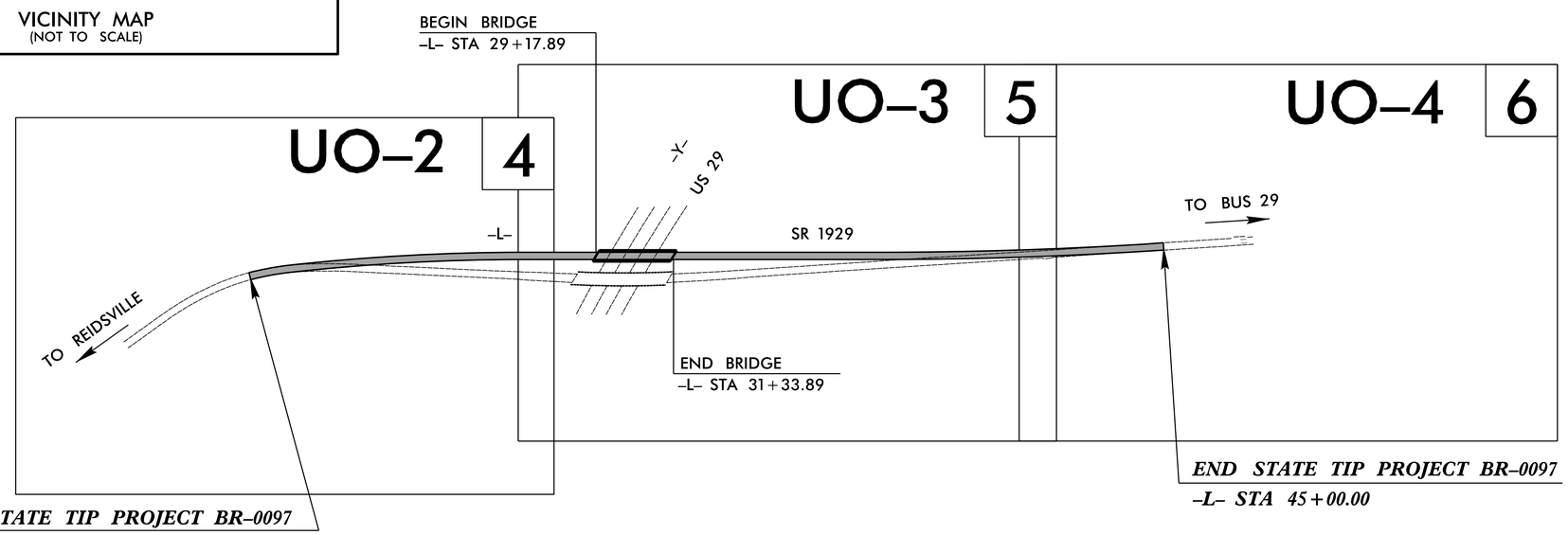

GRAPHIC SCALES

50 25 0 50 100
PLANS

50 25 0 50 100
PROFILE (HORIZONTAL)

5 2.5 0 5 10
PROFILE (VERTICAL)

INDEX OF SHEETS

SHEET NO.:	DESCRIPTION:
UO-1	TITLE SHEET
UO-2 – UO-4	UO PLAN SHEETS

UTILITIES OWNERS WITH CONFLICTS

A) POWER (DISTRIBUTION) – DUKE ENERGY
B) COMMUNICATIONS – AT&T
C) COMMUNICATIONS – CHARTER/SPECTRUM

PREPARED IN THE OFFICE OF:
DAVIS • MARTIN • POWELL
ENGINEERS & SURVEYORS
6415 OLD PLANK RD., HIGH POINT, NC 27265
PHONE: (336)886-4821 FAX: (336)886-4458
WWW.DMP-INC.COM LICENSE: F-0245

Kelly Hayes, PE, PLS	UTILITY PROJECT MANAGER
Steve McKee, PE	PROJECT UTILITY COORDINATOR
Kyle Stalls	PROJECT UTILITY COORDINATOR

DIVISION OF HIGHWAYS
UTILITIES UNIT
1555 MAIL SERVICES CENTER
RALEIGH NC 27699-1555
PHONE (919) 707-6690
FAX (919) 250-4151

Amy York	CENTRAL UTILITIES MANAGER
Ali Koucheki, PE	REGIONAL UTILITIES ENGINEER
Dayton Martin	REGIONAL UTILITIES COORDINATOR
Mark Cole	UTILITIES COORDINATOR

09/08/99
$$$$SYSTIME$$$$
$$$$USERNAME$$$$
$$$$DGN$$$$

PROJECT REFERENCE NO.	SHEET NO.
BR-0097	UO-2
THIS SHEET CORRESPONDS TO RDY-4	

UTILITIES BY OTHERS

ALL PROPOSED UTILITY WORK SHOWN ON THIS SHEET WILL BE DONE BY OTHERS. NO PAYMENT WILL BE MADE TO THE CONTRACTOR FOR PROPOSED UTILITY WORK SHOWN ON THIS SHEET.

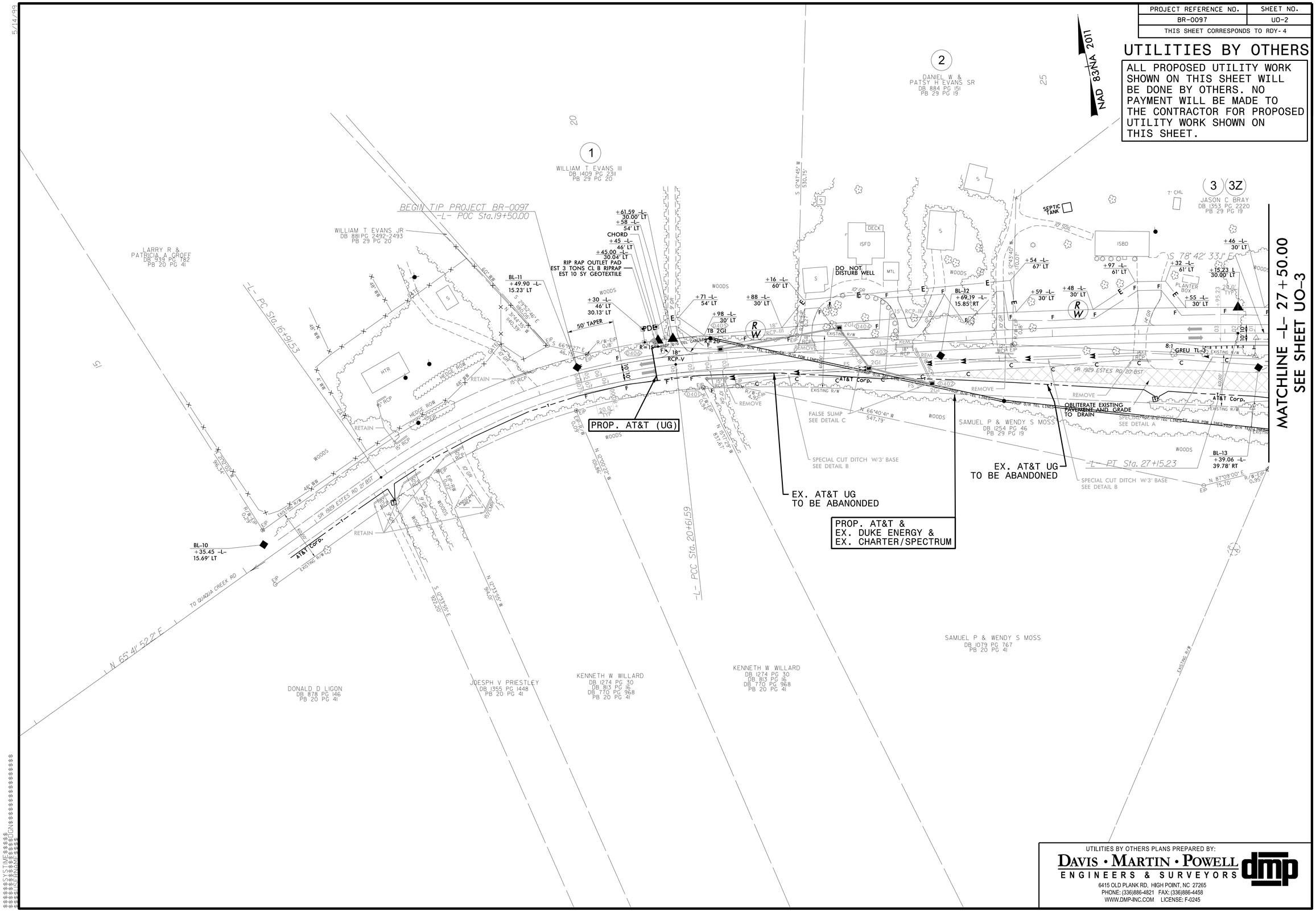

UTILITIES BY OTHERS PLANS PREPARED BY:

DAVIS • MARTIN • POWELL
ENGINEERS & SURVEYORS
6415 OLD PLANK RD, HIGH POINT, NC 27265
PHONE: (336)886-4821 FAX: (336)886-4458
WWW.DMP-INC.COM LICENSE: F-0245

PROJECT REFERENCE NO.	SHEET NO.
BR-0097	UO-3
THIS SHEET CORRESPONDS TO RDY-5	

UTILITIES BY OTHERS

ALL PROPOSED UTILITY WORK SHOWN ON THIS SHEET WILL BE DONE BY OTHERS. NO PAYMENT WILL BE MADE TO THE CONTRACTOR FOR PROPOSED UTILITY WORK SHOWN ON THIS SHEET.

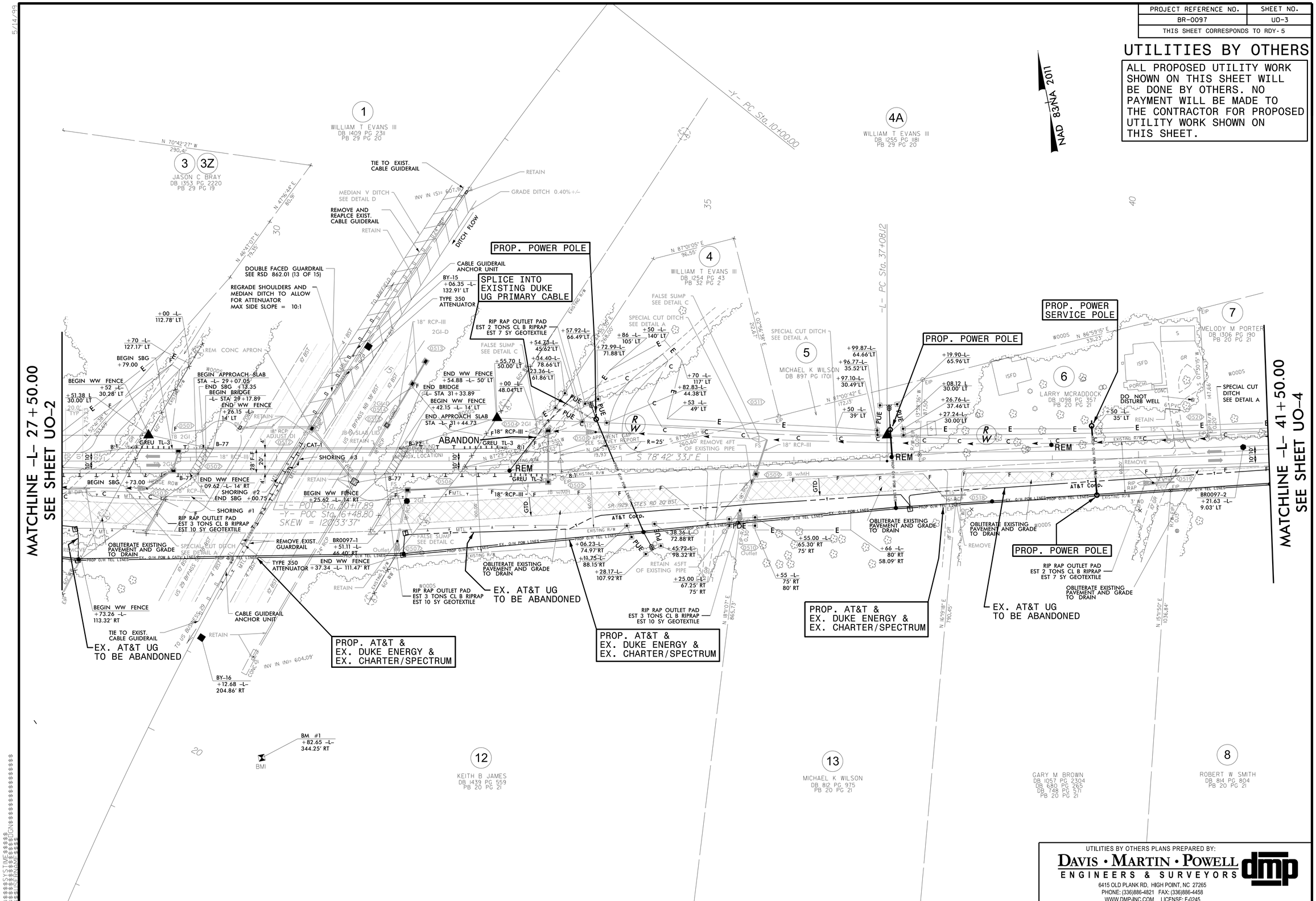

UTILITIES BY OTHERS PLANS PREPARED BY:

DAVIS • MARTIN • POWELL
ENGINEERS & SURVEYORS

6415 OLD PLANK RD, HIGH POINT, NC 27265
PHONE: (336)886-4821 FAX: (336)886-4458
WWW.DMP-INC.COM LICENSE: F-0245

PROJECT REFERENCE NO.	SHEET NO.
BR-0097	UO-4
THIS SHEET CORRESPONDS TO RDY-6	

UTILITIES BY OTHERS

ALL PROPOSED UTILITY WORK SHOWN ON THIS SHEET WILL BE DONE BY OTHERS. NO PAYMENT WILL BE MADE TO THE CONTRACTOR FOR PROPOSED UTILITY WORK SHOWN ON THIS SHEET.

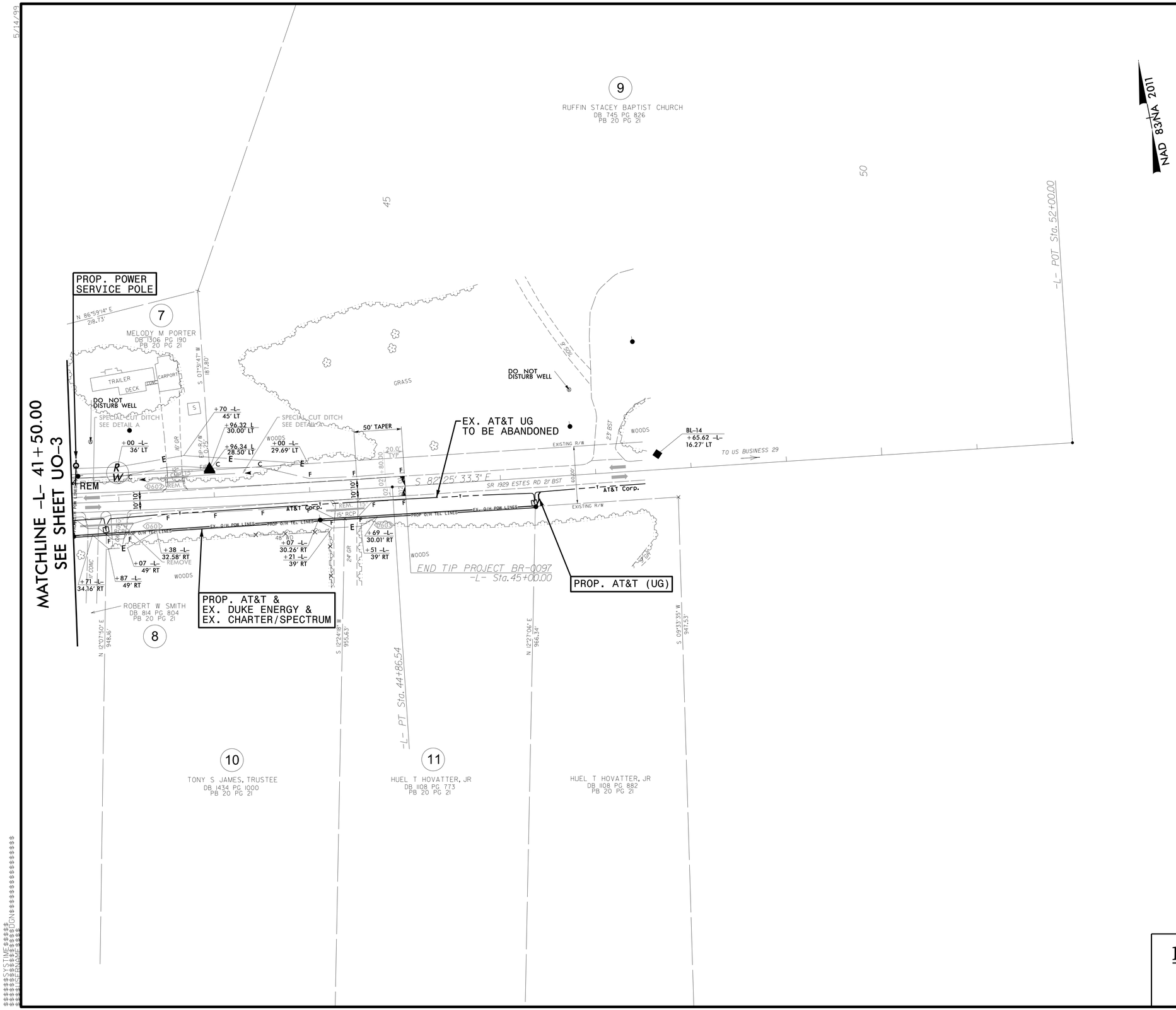

UTILITIES BY OTHERS PLANS PREPARED BY:
DAVIS • MARTIN • POWELL
ENGINEERS & SURVEYORS
6415 OLD PLANK RD. HIGH POINT, NC 27265
PHONE: (336)886-4821 FAX: (336)886-4458
WWW.DMP-INC.COM LICENSE: F-0245

5/14/99
$$$