DocuSign Envelope ID: 1B5F2B2A-B021-434E-84C0-A3C7618FB039

PROJECT REFERENCE NO.	SHEET NO.
U-5813	Sig. 12.1

18 CHANNEL IP CONFLICT MONITOR PROGRAMMING DETAIL

(remove jumpers and set switches as shown)

REMOVE DIODE JUMPERS 1-5, 1-6, 1-7, 1-9, 1-11, 1-12, 1-15, 2-5, 2-6, 2-7, 2-9, 2-11, 2-12, 2-13, 2-15, 3-16, 4-12, 4-14, 5-7, 5-9, 5-11, 5-12, 5-13, 6-9, 6-11, 6-13, 6-15, 7-9, 7-11, 7-12, 7-13, 9-11, 9-12, 9-13, 9-15, 11-12, 11-13, 11-15, 12-13, 12-14, and 13-15.

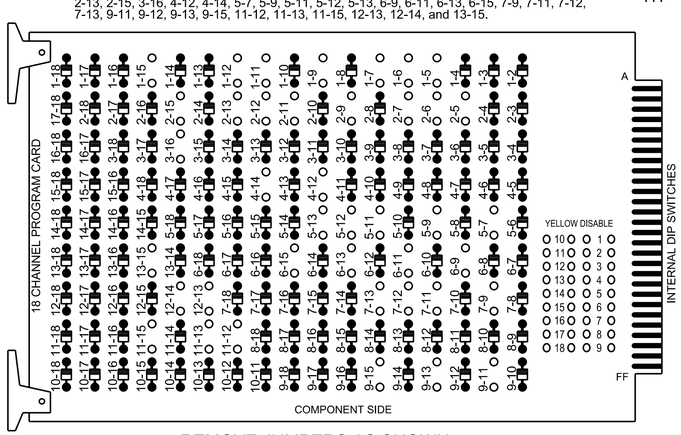

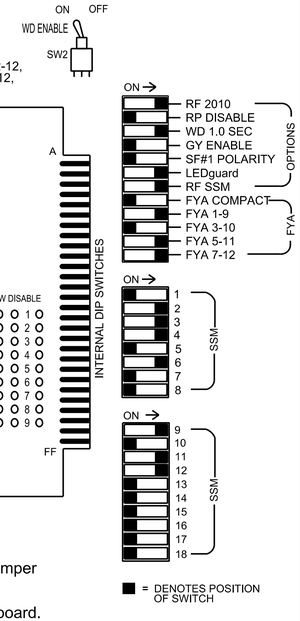

REMOVE JUMPERS AS SHOWN

NOTES:

1. Card is provided with all diode jumpers in place. Removal of any jumper allows its channels to run concurrently.
2. Ensure jumpers SEL2-SEL5 and SEL9 are present on the monitor board.
3. Ensure that the Red Enable is active at all times during normal operation.
4. Integrate monitor with Ethernet network in cabinet.

NOTES

1. To prevent "flash-conflict" problems, insert red flash program blocks for all unused vehicle load switches in the output file. The installer shall verify that signal heads flash in accordance with the signal plans.
2. Program controller to start up in phase 2 Green No Walk and 6 Green No Walk.
3. If this signal will be managed by an ATMS software, enable controller and detector logging for all enabled detectors used at this location.
4. The cabinet and controller are part of Signal System #D08-29_Asheboro, US 64 Bus-NC 49 (Asheboro).

EQUIPMENT INFORMATION

Controller.....2070LX
Cabinet.....332 w/ Aux
Software.....Q-Free MAXTIME
Cabinet Mount.....Base
Output File Positions.....18 With Aux. Output File
Load Switches Used.....S1,S2,S3,S4,S5,S6,S7,S8,S9,S10,S12
AUX S1,AUX S4,AUX S5
Phases Used.....1,2,2 PED,3,3 PED,4,4 PED,5,6,6 PED
Overlap "1".....*
Overlap "2".....Not Used
Overlap "3".....*
Overlap "4".....*
Overlap "5".....Not Used
Overlap "6".....Not Used
Overlap "7".....Not Used
Overlap "8".....*

*See overlap programming detail on sheet 2

SIGNAL HEAD HOOK-UP CHART

LOAD SWITCH NO.	S1	S2	S3	S4		S5		S6	S7	S8	S9	S10	S11	S12	AUX S1	AUX S2	AUX S3	AUX S4	AUX S5	AUX S6
CMU CHANNEL NO.	1	2	13	3		4		14	5	6	15	7	8	16	9	10	17	11	12	18
PHASE	1	2	2 PED	3		4		4 PED	5	6	6 PED	OL8	8	3 PED	OL1	OL2	SPARE	OL3	OL4	SPARE
SIGNAL HEAD NO.	★ 11	21,22	P21, P22	31	32	41	42	P41, P42	★ 51	61,62	P61, P62	★ 43	NU	P31, P32	★ 11	NU	NU	★ 51	★ 43	NU
RED		128		116	116	101	101			134									A101	
YELLOW	*	129		117	117	102	102		*	135		*								
GREEN		130		118	118	103	103			136										
RED ARROW															A121			A114		
YELLOW ARROW															A122			A115	A102	
FLASHING YELLOW ARROW															A123			A116	A103	
GREEN ARROW	133			118		103			133			124								
✋			113					104			119			110						
🚶			115					106			121			112						

NU = Not Used

* Denotes install load resistor. See load resistor installation detail this sheet.

★ See pictorial of head wiring in detail this sheet.

INPUT FILE POSITION LAYOUT

(front view)

		1	2	3	4	5	6	7	8	9	1O	11	12	13	14
FILE "I"	U	Ø 1	Ø 2	SLOT	SLOT	Ø 3	Ø 4	SLOT	SLOT	SLOT	SLOT	SLOT	Ø 2 PED	Ø 6 PED	FS
		1A	2A	EMPTY	EMPTY	3A	4A	EMPTY	EMPTY	EMPTY	EMPTY	EMPTY	DC ISOLATOR	DC ISOLATOR	DC ISOLATOR
	L	NOT USED	NOT USED			NOT USED	NOT USED						Ø 4 PED	Ø 3 PED	ST
													DC ISOLATOR	DC ISOLATOR	DC ISOLATOR
FILE "J"	U	Ø 5	Ø 5	Ø 6	SLOT	SLOT	SLOT	SLOT	SLOT	SLOT	SLOT	SLOT	SLOT	SLOT	SLOT
		5A	5B	6A	EMPTY	EMPTY	EMPTY	EMPTY	EMPTY	EMPTY	EMPTY	EMPTY	EMPTY	EMPTY	EMPTY
	L	NOT USED	NOT USED	NOT USED											

EX. : 1A, 2A, ETC. = LOOP NO.'S

FS = FLASH SENSE
ST = STOP TIME

INPUT FILE CONNECTION & PROGRAMMING CHART

LOOP NO.	LOOP TERMINAL	INPUT FILE POS.	PIN NO.	INPUT POINT	DETECTOR NO.	CALL PHASE	DELAY TIME	EXTEND TIME	EXTEND	ADDED INITIAL	CALL	DELAY DURING GREEN
1A	TB2-1,2	I1U	56	18	1★	1	15		X		X	
				-	29★	6			X		X	
2A	TB2-5,6	I2U	39	1	2	2			X		X	
3A	TB4-5,6	I5U	58	20	7	3	10		X		X	
4A	TB4-9,10	I6U	41	3	8	4	3		X		X	
5A	TB3-1,2	J1U	55	17	15★	5	15		X		X	
				-	31★	2			X		X	
5B	TB3-5,6	J2U	40	2	16	5	15		X		X	
6A	TB3-9,10	J3U	64	30	18	6			X		X	
PED PUSH BUTTONS												
P21,P22	TB8-4,6	I12U	67	33	2	PED 2						
P41,P42	TB8-5,6	I12L	69	35	4	PED 4						
P61,P62	TB8-7,9	I13U	68	34	6	PED 6						
P31,P32	TB8-8,9	I13L	70	36	8	PED 3						

NOTE:
INSTALL DC ISOLATORS IN INPUT FILE SLOTS I12 AND I13.

★ For the detectors to work as shown on the signal design plan, see the Detector Programming Detail for Alternate Phasing on Sheet 2.

INPUT FILE POSITION LEGEND: J2L
FILE J
SLOT 2
LOWER

FYA SIGNAL WIRING DETAIL

(wire signal heads as shown)

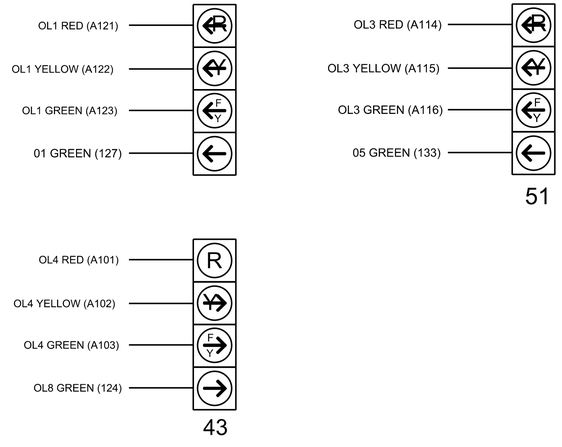

LOAD RESISTOR INSTALLATION DETAIL

(install resistors as shown)

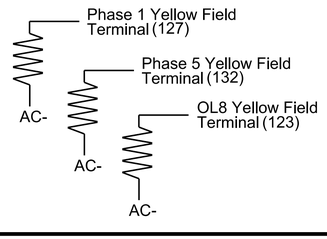

ACCEPTABLE VALUES	
Value (ohms)	Wattage
1.5K - 1.9K	25W (min)
2.0K - 3.0K	10W (min)

COUNTDOWN PEDESTRIAN SIGNAL OPERATION

Countdown Ped Signals are required to display timing only during Ped Clearance Interval. Consult Ped Signal Module user's manual for instructions on selecting this feature.

THIS ELECTRICAL DETAIL IS FOR
THE SIGNAL DESIGN: 08-0246
DESIGNED: AUGUST 2021
SEALED: 05/21/2024
REVISED:

Signal Upgrade - Final Design
Electrical Detail - Sheet 1 of 3

DOCUMENT NOT CONSIDERED FINAL UNLESS ALL SIGNATURES COMPLETED

HNTB NORTH CAROLINA, P.C.
343 E. Six Forks Road, Suite 200
Raleigh, North Carolina 27609
NC License No: C-1554
(919) 546-8997

ELECTRICAL AND PROGRAMMING DETAILS FOR:

Prepared for the Offices of:
Traffic Engineering, Mobility and Safety Division
Traffic Control & Signal Management Section
750 N. Greenfield Pkwy, Garner, NC 27529

SR 1713 (Albemarle Rd)
at
SR 1446 (Lewallen Rd) and
SR 1450 (Brookway Rd)

Division 8 | Randolph County | Asheboro

PLAN DATE:	August 2021	REVIEWED BY:	A.D. Klinksiek
PREPARED BY:	N.K. Vlanich	REVIEWED BY:	N.R. Simmons

REVISIONS	INIT.	DATE

SEAL
NORTH CAROLINA PROFESSIONAL SEAL 031464 ENGINEER NATASHA R. SIMMONS

DocuSigned by:
Natasha R Simmons 5/21/2024
SIGNATURE DATE
PROFESSIONAL ENGINEER
SIG. INVENTORY NO. 08-0246

21-MAY-2024 11:52
$$$$$$$$$$$$$$$$$$$$$$$$$$$$$$$$
HNTB