DocuSign Envelope ID: 1B5F2B2A-B021-434E-84C0-A3C7618FB039

PROJECT REFERENCE NO.	SHEET NO.
U-5813	Sig. 3.1

18 CHANNEL IP CONFLICT MONITOR PROGRAMMING DETAIL

(remove jumpers and set switches as shown)

REMOVE DIODE JUMPERS 1-5, 1-6, 1-9, 1-11, 2-5, 2-6, 2-9, 2-11, 3-7, 3-8, 3-10, 3-12, 4-7, 4-8, 4-10, 4-12, 5-9, 5-11, 6-9, 6-11, 7-10, 7-12, 8-10, 8-12, 9-11, and 10-12.

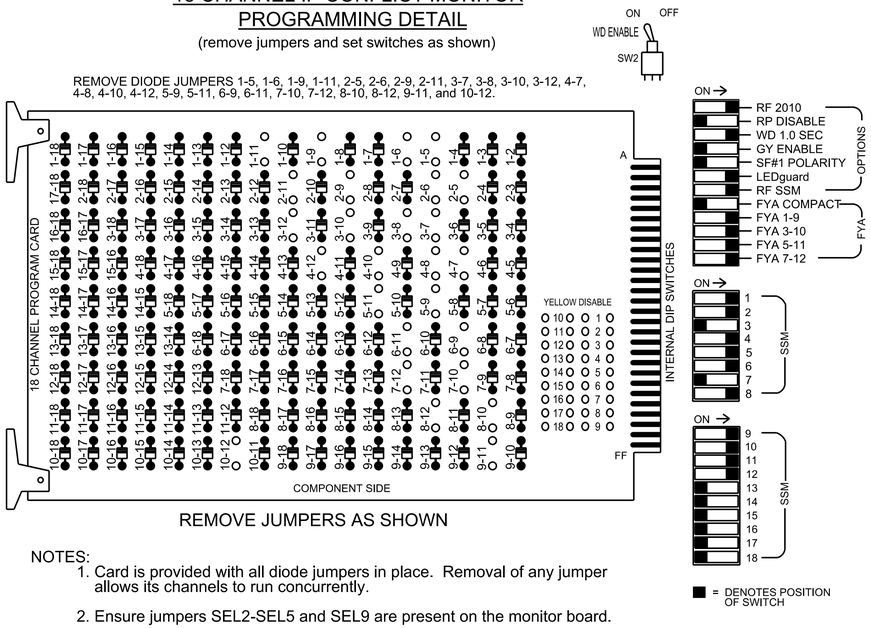

REMOVE JUMPERS AS SHOWN

NOTES:

1. Card is provided with all diode jumpers in place. Removal of any jumper allows its channels to run concurrently.
2. Ensure jumpers SEL2-SEL5 and SEL9 are present on the monitor board.
3. Ensure that the Red Enable is active at all times during normal operation.
4. Integrate monitor with Ethernet network in cabinet.

NOTES

1. To prevent "flash-conflict" problems, insert red flash program blocks for all unused vehicle load switches in the output file. The installer shall verify that signal heads flash in accordance with the signal plans.
2. Program phases 4 and 8 for Dual Entry.
3. Program controller to start up in phase 2 Green No Walk and 6 Green No Walk.
4. If this signal will be managed by an ATMS software, enable controller and detector logging for all enabled detectors used at this location.
5. The cabinet and controller are part of Signal System #D08-29_Asheboro, US 64 Bus-NC 49 (Asheboro).

EQUIPMENT INFORMATION

Controller.....2070LX
Cabinet.....332 w/ Aux
Software.....Q-Free MAXTIME
Cabinet Mount.....Base
Output File Positions.....18 With Aux. Output File
Load Switches Used.....S1,S2,S4,S5,S7,S8,S10,S11
AUX S1,AUX S2,AUX S4,AUX S5
Phases Used.....1,2,3,4,5,6,7,8
Overlap "1".....*
Overlap "2".....*
Overlap "3".....*
Overlap "4".....*

*See overlap programming detail on sheet 2

SIGNAL HEAD HOOK-UP CHART

LOAD SWITCH NO.	S1	S2	S3	S4	S5	S6	S7		S8	S9	S10	S11	S12	AUX S1	AUX S2	AUX S3	AUX S4	AUX S5	AUX S6
CMU CHANNEL NO.	1	2	13	3	4	14	5		6	15	7	8	16	9	10	17	11	12	18
PHASE	1	2	2 PED	3	4	4 PED	5		6	6 PED	7	8	8 PED	OL1	OL2	SPARE	OL3	OL4	SPARE
SIGNAL HEAD NO.	★ 11	82	21,22	NU	★ 31	41,42	NU	42	★ 51	61,62	NU	★ 71	81,82	NU	★ 11	★ 31	NU	★ 51	★ 71	NU
RED	*		128			101			*	134			107							
YELLOW			129		*	102				135		*	108							
GREEN			130			103				136			109							
RED ARROW															A121	A124		A114	A101	
YELLOW ARROW		126					132								A122	A125		A115	A102	
FLASHING YELLOW ARROW															A123	A126		A116	A103	
GREEN ARROW	127	127		118			133	133			124									
✋																				
🚶																				

NU = Not Used

* Denotes install load resistor. See load resistor installation detail this sheet.

★ See pictorial of head wiring in detail this sheet.

INPUT FILE POSITION LAYOUT

(front view)

		1	2	3	4	5	6	7	8	9	1O	11	12	13	14
FILE "I"	U	Ø 1 1A	Ø 1 1B	Ø 2 2A	SLOT EMPTY	Ø 3 3A	Ø 4 4A	SLOT EMPTY	SLOT EMPTY	SLOT EMPTY	SLOT EMPTY	SLOT EMPTY	SLOT EMPTY	SLOT EMPTY	FS DC ISOLATOR
	L	NOT USED	Ø 1 1C	NOT USED		NOT USED	NOT USED								ST DC ISOLATOR
FILE "J"	U	Ø 5 5A	Ø 5 5B	SLOT EMPTY	SLOT EMPTY	Ø 7 7A	Ø 8 8A	SLOT EMPTY	SLOT EMPTY	SLOT EMPTY	SLOT EMPTY	SLOT EMPTY	SLOT EMPTY	SLOT EMPTY	SLOT EMPTY
	L	NOT USED	Ø 5 5C			NOT USED	NOT USED								

EX. : 1A, 2A, ETC. = LOOP NO.'S

FS = FLASH SENSE
ST = STOP TIME

SPECIAL DETECTOR NOTE

Install a single-zone microwave detection system for vehicle detection. Perform installation according to manufacturer's directions and NCDOT engineer -approved mounting locations to accomplish the detection schemes shown on the Signal Design Plans.

INPUT FILE CONNECTION & PROGRAMMING CHART

LOOP NO.	LOOP TERMINAL	INPUT FILE POS.	PIN NO.	INPUT POINT	DETECTOR NO.	CALL PHASE	DELAY TIME	EXTEND TIME	EXTEND	ADDED INITIAL	CALL	DELAY DURING GREEN
1A	TB2-1,2	I1U	56	18	1 ★	1	15		X		X	
				-	29 ★	6	3		X		X	X
1B	TB2-5,6	I2U	39	1	2	1	15		X		X	
1C	TB2-7,8	I2L	43	5	3	1	15		X		X	
2A	TB2-9,10	I3U	63	29	4	2			X	X	X	
3A	TB4-5,6	I5U	58	20	7	3	15		X		X	
				-	30	8	3		X		X	
4A	TB4-9,10	I6U	41	3	8	4			X		X	
5A	TB3-1,2	J1U	55	17	15 ★	5	15		X		X	
				-	31 ★	2	3		X		X	X
5B	TB3-5,6	J2U	40	2	16	5	15		X		X	
5C	TB3-7,8	J2L	44	6	17	5	15		X		X	
7A	TB5-5,6	J5U	57	19	21	7	15		X		X	
				-	32	4	3		X		X	
8A	TB5-9,10	J6U	42	4	22	8			X		X	

★ For the detectors to work as shown on the signal design plan, see the Detector Programming Detail for Alternate Phasing on Sheet 2.

INPUT FILE POSITION LEGEND: J2L
FILE J
SLOT 2
LOWER

FYA SIGNAL WIRING DETAIL

(wire signal heads as shown)

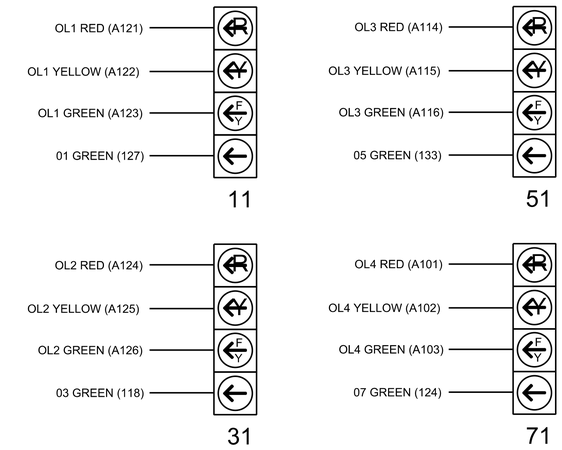

LOAD RESISTOR INSTALLATION DETAIL

(install resistors as shown)

ACCEPTABLE VALUES	
Value (ohms)	Wattage
1.5K - 1.9K	25W (min)
2.0K - 3.0K	10W (min)

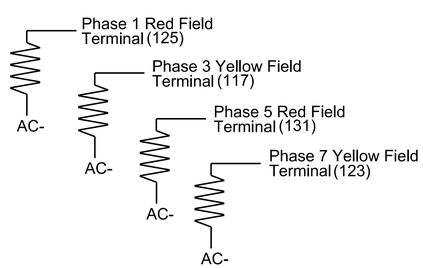

THIS ELECTRICAL DETAIL IS FOR
THE SIGNAL DESIGN: 08-0506T2
DESIGNED: AUGUST 2021
SEALED: 05/21/2024
REVISED:

HNTB
HNTB NORTH CAROLINA, P.C.
343 E. Six Forks Road, Suite 200
Raleigh, North Carolina 27609
NC License No: C-1554
(919) 546-8997

Signal Upgrade
Temporary Design 2
Electrical Detail - Sheet 1 of 3

DOCUMENT NOT CONSIDERED FINAL UNLESS ALL SIGNATURES COMPLETED

ELECTRICAL AND PROGRAMMING DETAILS FOR:

NC 49 (Albemarle Rd)
at
SR 1144 (Mack Rd)

Division 8 | Randolph County | Asheboro

PLAN DATE:	August 2021	REVIEWED BY:	A.D. Klinksiek
PREPARED BY:	N.K. Vlanich	REVIEWED BY:	N.R. Simmons

REVISIONS	INIT.	DATE

Prepared for the Offices of:
Traffic Engineering Branch, Mobility and Safety Division, Department of Transportation, State of North Carolina, Traffic Signal Management Section
750 N. Greenfield Pkwy, Garner, NC 27529

SEAL
NORTH CAROLINA PROFESSIONAL SEAL 031464 ENGINEER NATASHA R. SIMMONS

DocuSigned by: Natasha R Simmons 5/21/2024
SIGNATURE DATE
TRANSPORTATION ENGINEER
SIG. INVENTORY NO. 08-0506T2

21-MAR-2024 11:51
$$$$$$$$$$$$$$$$$$$$$$$$$$$$$$$$
HNTB