DocuSign Envelope ID: 98E68974-D859-4C59-8082-16310E8C5BE6

PROJ. REFERENCE NO.	SHEET NO.
HB-0003	TMP-11

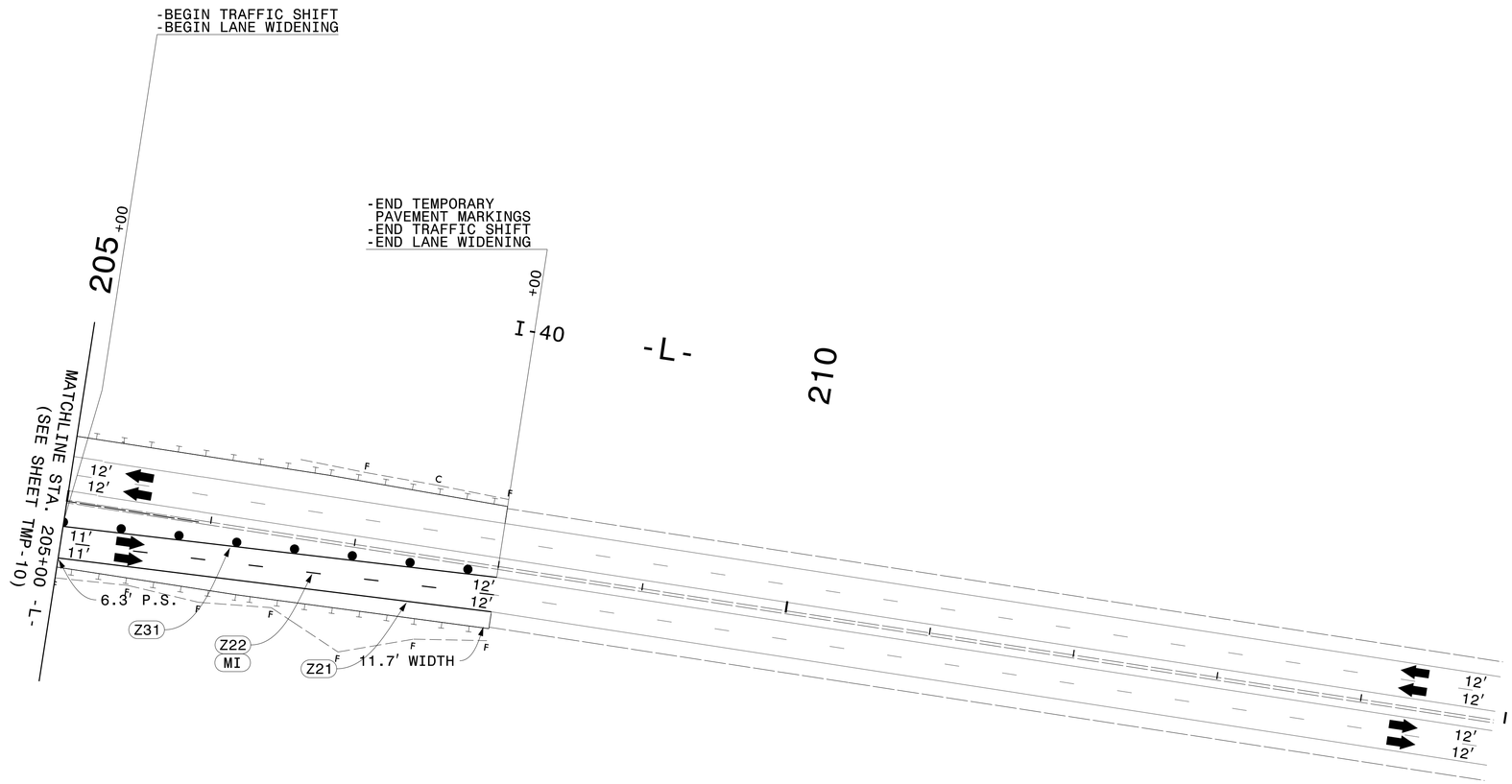

NOTES:
1) PEOT = PROPOSED EDGE OF TRAVEL
PTOC = PROPOSED TOP OF CROWN

WETHERILL ENGINEERING
1223 Jones Franklin Rd.
Raleigh, N.C. 27606
License No. F-0377
Bus: 919 851 8077
Fax: 919 851 8107
TRANSPORTATION PLANNING/DESIGN - BRIDGE/STRUCTURE DESIGN
CIVIL/SITE DESIGN - GIS/GPS - CONSTRUCTION OBSERVATION

APPROVED: DocuSigned by: Lawrence H. Green 4B087088968D48B...
DATE: 4/8/2024
NORTH CAROLINA PROFESSIONAL SEAL 028137 ENGINEER LAWRENCE H. GREEN

DOCUMENT NOT CONSIDERED FINAL UNLESS ALL SIGNATURES COMPLETED

DIVISION OF HIGHWAYS · STATE OF NORTH CAROLINA · DEPARTMENT OF TRANSPORTATION · WORK ZONE TRAFFIC CONTROL

PHASE II DETAIL

4/5/2024
P:\2023\23I28.01_HB-0003\Traffic\Traffic Design\Pre-Let\Plan\WZTC\HB-0003_TMP_II_PHII.dgn
User:AHayes