DocuSign Envelope ID: 6C678498-28DA-420E-B672-290C14E1DD88

PROJECT REFERENCE NO.	SHEET NO.
HB-0003	2A-3

ROADWAY DESIGN ENGINEER 5/14/2024 — NORTH CAROLINA PROFESSIONAL SEAL 35016 ENGINEER JONATHAN C. HEFNER — DocuSigned by: Jonathan C. Hefner

PAVEMENT DESIGN ENGINEER 5/14/2024 — NORTH CAROLINA PROFESSIONAL SEAL 024964 ENGINEER JOSEPH T. HOLLAND — DocuSigned by: Joseph T. Holland — 02BB9ADB7E0E478

WETHERILL ENGINEERING
1223 Jones Franklin Rd.
Raleigh, N.C. 27606
License No. F-0377
Bus: 919 851 8077
Fax: 919 851 8107
TRANSPORTATION PLANNING/DESIGN - BRIDGE/STRUCTURE DESIGN
CIVIL/SITE DESIGN - GIS/GPS - CONSTRUCTION OBSERVATION

DOCUMENT NOT CONSIDERED FINAL UNLESS ALL SIGNATURES COMPLETED

* EASTBOUND INSIDE AND OUTSIDE PAVED SHOULDERS ARE TO MATCH SUPERELEVATION OF ADJACENT TRAVEL LANE TO FACILITATE TRAFFIC PHASING AND MEDIAN CROSSOVERS.

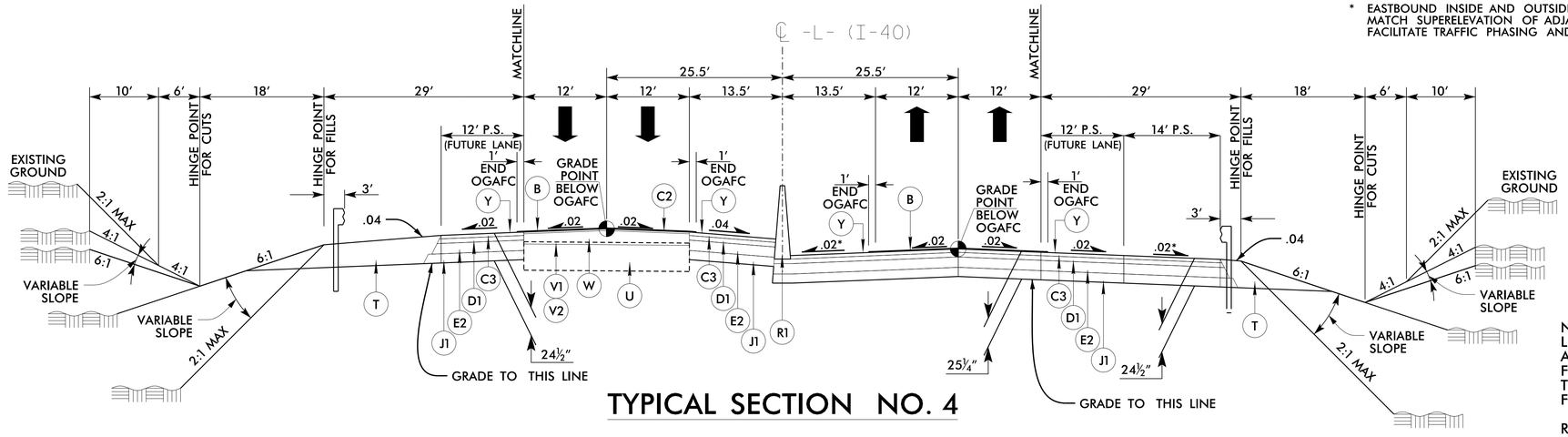

TYPICAL SECTION NO. 4

–L– STA. 182+00.00 TO STA. 195+00.00

NOTE:
LEFT SHOULDER POINT IS SET AT 66.5′ FROM CENTERLINE FOR –L– STA. 182+00.00 TO 194+00.00 TO MATCH SHOULDER POINT FOR FUTURE WIDENING.

RIGHT SHOULDER POINT IS SET AT 66.5′ FROM CENTERLINE FOR –L– STA. 182+12.00 TO 195+00.00 TO MATCH SHOULDER POINT FOR FUTURE WIDENING.

MILLING IS V2 IN LOCATIONS WITH EXISTING OGAFC

PAVEMENT SCHEDULE	
B	¾″ OGAFC TYPE FC-1 MOD.
C1	3″ S9.5C
C2	1½″ S9.5D
C3	3″ S9.5D
C4	VAR. S9.5D
D1	4″ I19.0C
D2	VAR. I19.0C
E1	4″ B25.0C
E2	9½″ B25.0C
E3	13″ B25.0C
E4	VAR. B25.0C
J1	8″ ABC
R1	SINGLE SLOPE CONCRETE BARRIER
R2	SINGLE FACED CONCRETE BARRIER
R3	SHOULDER BERM GUTTER
T	EARTH MATERIAL
U	EXIST. PAVEMENT
V1	1½″ MILLING
V2	2¼″ MILLING
W	WEDGING
Y	RUMBLE STRIP

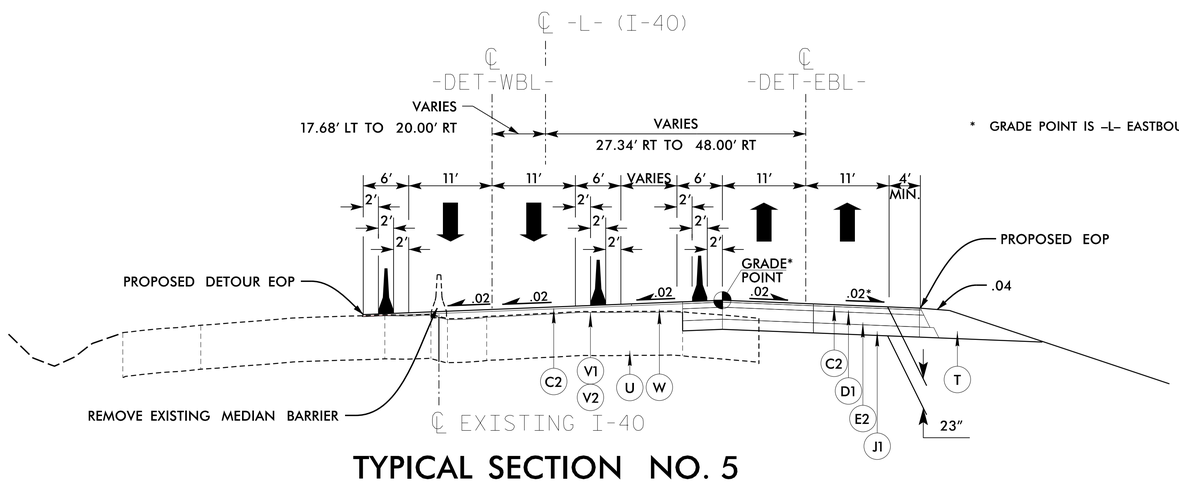

* GRADE POINT IS –L– EASTBOUND PGL MINUS 1½″

NOTES:

–DET–EBL– WILL BE CONSTRUCTED TO PROPOSED FINISHED GRADE MINUS THE FINAL LIFT OF S9.5D

–DET–WBL– WILL BE CONSTRUCTED TO PROPOSED FINISHED GRADE MINUS THE FINAL LIFT OF S9.5D AND BY EXTENSION OF THE PROPOSED EASTBOUND INSIDE TRAVEL LANE. CROSS SLOPE OF THE EXTENDED PAVEMENT WILL MATCH THE INSIDE TRAVEL LANE CROSS SLOPE TO THE PAVING LIMITS REQUIRED FOR THE DETOUR.

TRANSITION FROM EXISTING WESTBOUND PAVEMENT TO PROPOSED DETOUR PAVEMENT FROM –DET–WBL– STA. 175+99.69 TO 176+46.59.

TRANSITION FROM PROPOSED DETOUR PAVEMENT TO FINAL WESTBOUND PAVEMENT MINUS FINAL LIFT OF S9.5D FROM –DET–WBL– STA. 200+00.30 TO 200+50.45.

TYPICAL SECTION NO. 5

–DET–WBL– STA. 176+49.59 TO STA. 200+00.30
–DET–EBL– STA. 176+52.80 TO STA. 199+99.73

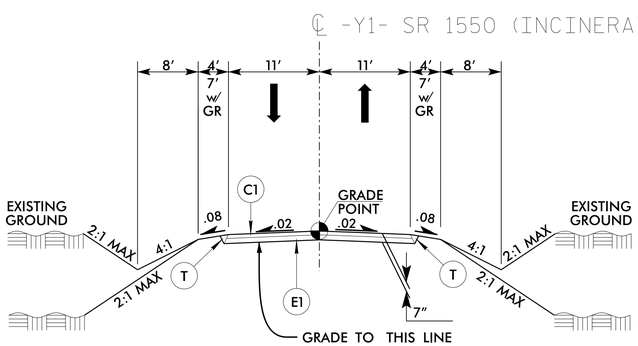

TYPICAL SECTION NO. 6

–Y1– STA. 10+00.00 TO STA. 12+68.00
–Y1– STA. 14+42.00 TO STA. 20+00.00

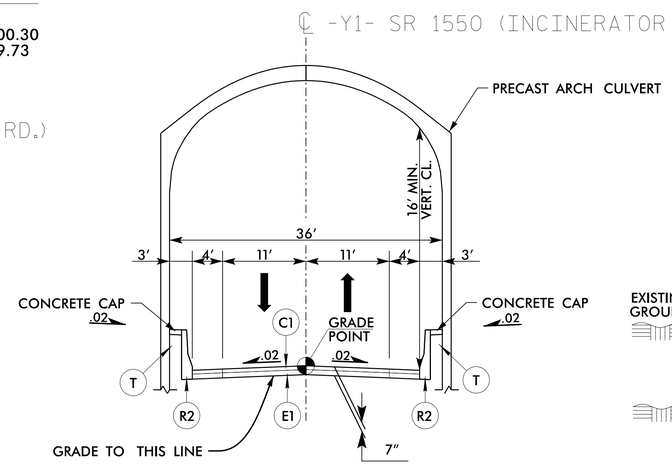

TYPICAL SECTION NO. 7

–Y1– STA. 12+68.00 TO STA. 14+42.00

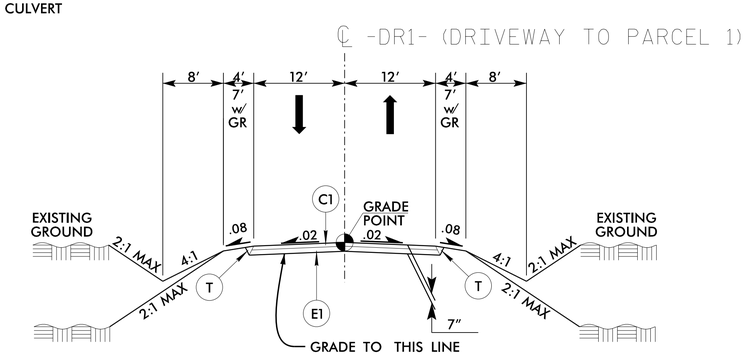

TYPICAL SECTION NO. 8

–DR1– STA. 10+11.04 TO STA. 11+50.00

6/2/99
5/13/2024
n:\hydro\hb0003_rdy_psh_02A-03_typ.dgn
USER:hefner