DocuSign Envelope ID: F73F27B9-C79A-4F73-9183-D7F0577DAFC7

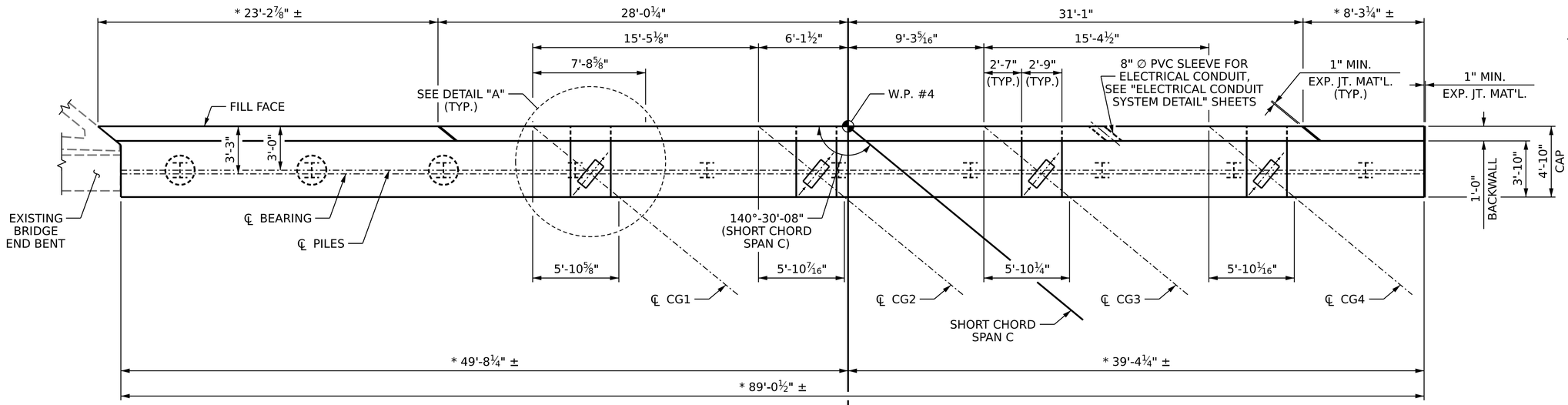

PLAN

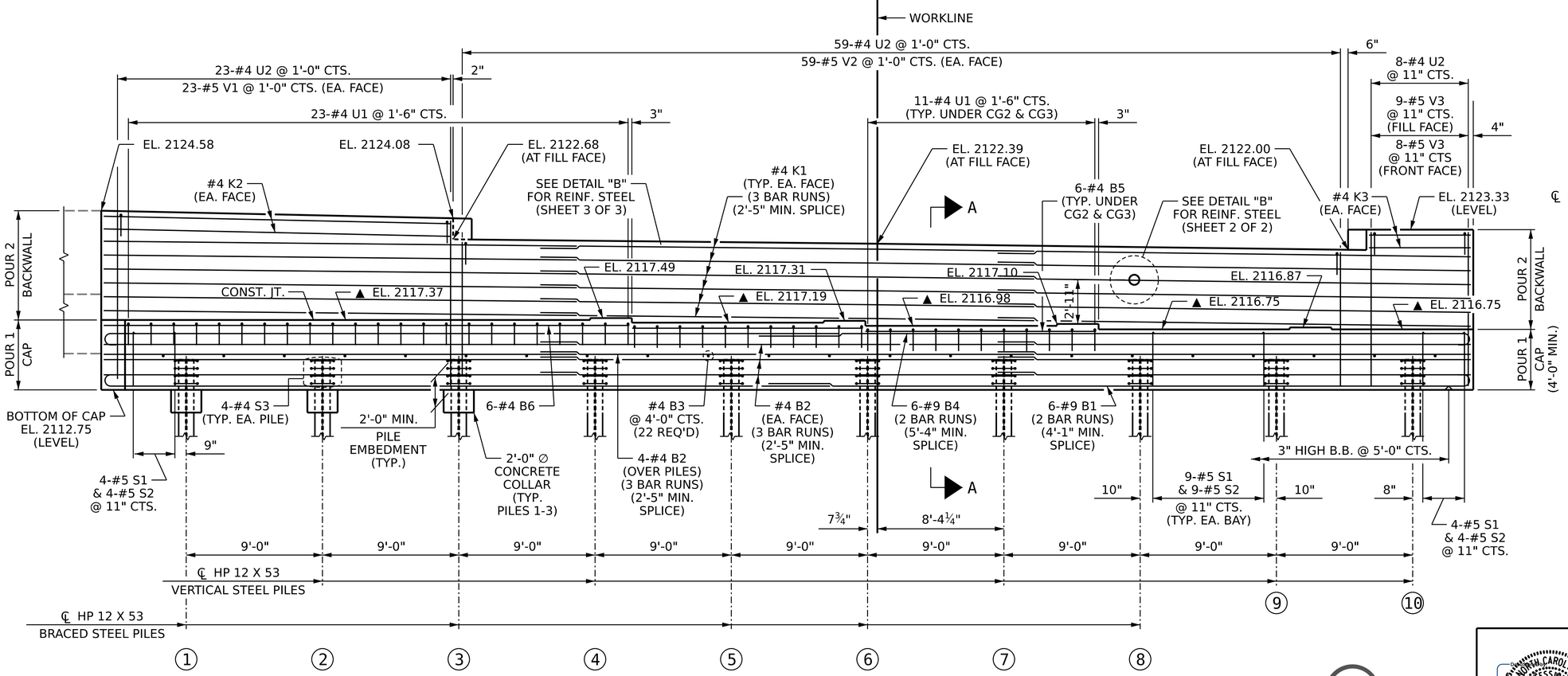

ELEVATION

NOTES:

STIRRUPS AND "U" BARS IN CAP MAY BE SHIFTED AS NECESSARY TO CLEAR ANCHOR BOLTS.

BACKWALL SHALL BE PLACED BEFORE APPLYING THE EPOXY PROTECTIVE COATING.

THE TOP SURFACE AREAS OF THE END BENT CAPS SHALL BE CURED IN ACCORDANCE WITH THE STANDARD SPECIFICATIONS EXCEPT THE MEMBRANE CURING COMPOUND METHOD SHALL NOT BE USED.

THE TOP SURFACE OF THE CAP EXCEPT THE BRIDGE SEAT BUILDUPS SHALL BE SLOPED TRANSVERSELY FROM THE FILL FACE TO THE BACK FACE AT THE RATE 2%.

▲ FOR LOCATION OF ELEVATIONS BETWEEN BRIDGE SEAT BUILDUPS, SEE SECTION A-A SHEET 2 OF 2.

SEE GENERAL DRAWING "FOUNDATION LAYOUT" FOR ADDITIONAL NOTES FOR DRIVING PILES.

* END BENT IS EXTENDED TO MEET EXISTING END BENT ON LEFT AND MSE WALL ON RIGHT.

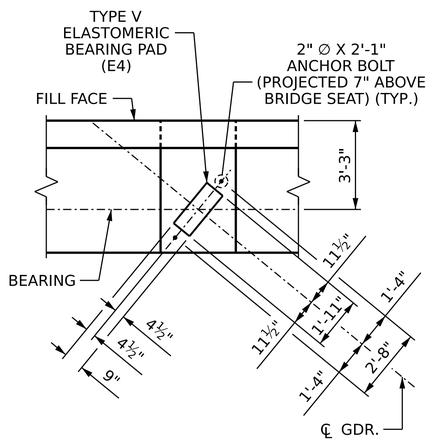

DETAIL "A"

(TYP. EA. GIRDER)

PROJECT NO. I-2513AA/AB
BUNCOMBE COUNTY
STATION: 20+16.70 -Y5RPA-

SHEET 1 OF 2

STATE OF NORTH CAROLINA
DEPARTMENT OF TRANSPORTATION
RALEIGH

SUBSTRUCTURE

END BENT 2

WGI
5640 Dillard Drive, Suite 200
Cary, NC 27518
LICENSURE NO. C-4434

NORTH CAROLINA PROFESSIONAL ENGINEER SEAL 023908 MARK A. AVERETTE
12/21/2023 | 11:09 AM PST

DOCUMENT NOT CONSIDERED FINAL UNLESS ALL SIGNATURES COMPLETED

REVISIONS							
NO.	BY:	DATE:	NO.	BY:	DATE:		
1			3				
2			4				

SHEET NO. S-42
TOTAL SHEETS 49

DRAWN BY :	T. BANKOVICH	DATE :	12-23
CHECKED BY :	M.A. AVERETTE	DATE :	12-23
DESIGN ENGINEER OF RECORD:	M.A. AVERETTE	DATE :	12-23

12/21/2023 1:49:48 PM c:\pwworking\aecom_ds21_na_2020\d0252774\I2513AA_SMU_EB4_100902.dgn