DocuSign Envelope ID: 91B23B57-CFB9-45C9-B5BC-37A8B08DE867

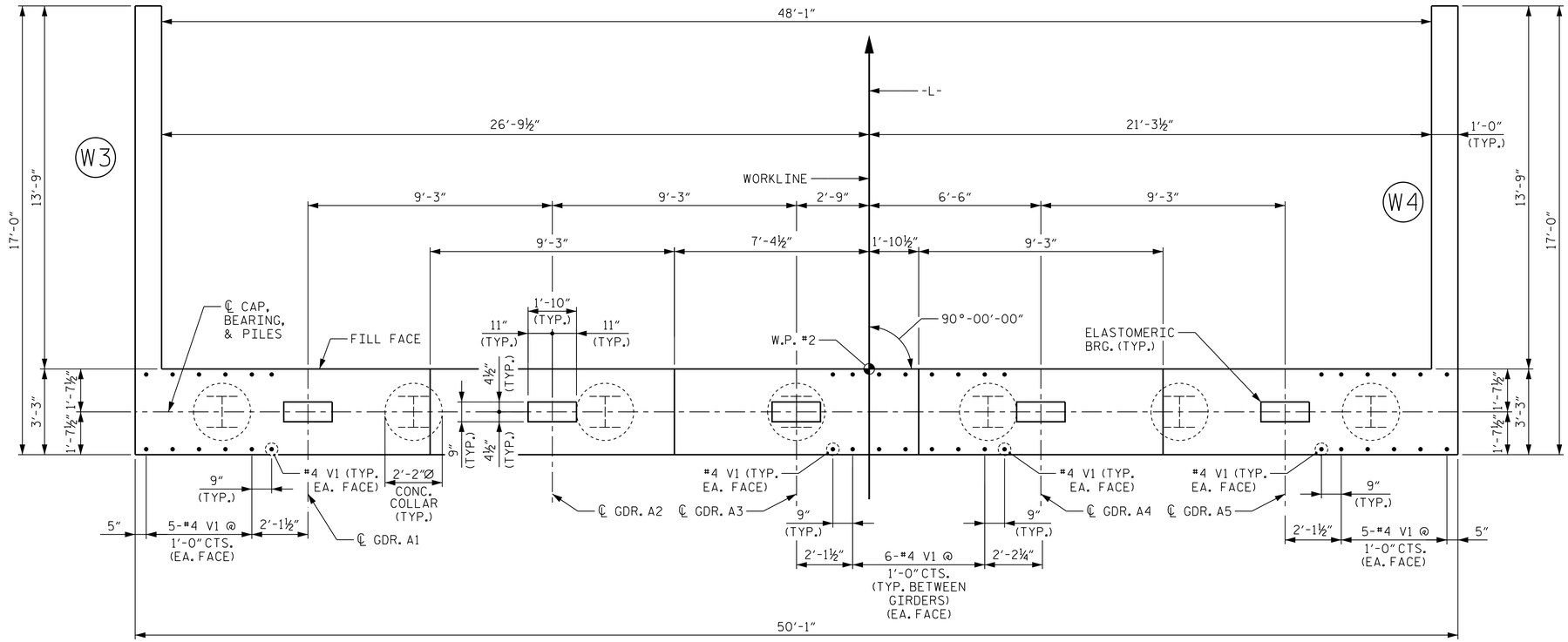

PLAN

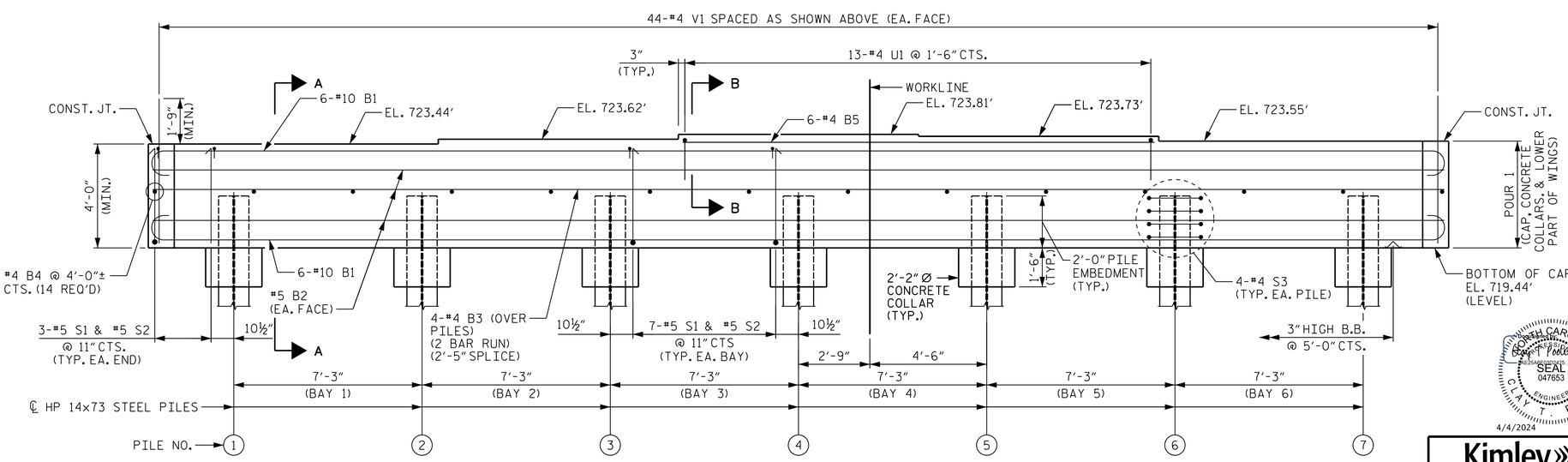

ELEVATION

NOTES

FOR PILE SPLICE DETAILS, AND TEMPORARY DRAINAGE DETAILS, SEE SHEET 3 OF 3.

FOR SECTION A-A AND PARTIAL SECTION B-B, SEE SHEET 3 OF 3.

STIRRUPS IN CAP MAY BE SHIFTED AS NECESSARY TO CLEAR #4 V1 BARS.

THE TOP SURFACE OF POUR 1 OF THE END BENT CAP AND WINGS, EXCLUDING THE BEARING AREA, SHALL BE RAKED TO A DEPTH OF 1/4".

PROJECT NO. U-5108
MECKLENBURG COUNTY
STATION: 74+01.00 -L-

SHEET 1 OF 3

STATE OF NORTH CAROLINA
DEPARTMENT OF TRANSPORTATION
RALEIGH

SUBSTRUCTURE

END BENT 2 PLAN AND ELEVATION

NORTH CAROLINA PROFESSIONAL SEAL 047653 ENGINEER C. T. POOLE
4/4/2024

Kimley»Horn
421 Fayetteville Street, Suite 600
Raleigh, NC 27601-1772
Phone (919) 677-2000
NC LICENSE # F-0102

This document, together with the concepts and designs presented herein, as an instrument of services, is intended only for the specific purpose and client for which it was prepared. Reuse of and improper reliance on this document without written consent by Kimley-Horn and Associates, Inc. shall be without liability to Kimley-Horn and Associates, Inc.
Copyright Kimley-Horn and Associates, Inc., 2024

REVISIONS						
NO.	BY:	DATE:	NO.	BY:	DATE:	
1			3			
2			4			

SHEET NO. S-28
TOTAL SHEETS 33

DRAWN BY: J. I. KIMBLE DATE: 10/2023
CHECKED BY: T. H. ORR DATE: 10/2023
DESIGN ENGINEER OF RECORD: C. T. POOLE DATE: 10/2023

DOCUMENT NOT CONSIDERED FINAL UNLESS ALL SIGNATURES COMPLETED

2/28/2024 K:\RDT_Structures_Bridge\NC\01036359 - U-5108\Cad\Dgn\U5108_SMU_E4_591403.dgn