DocuSign Envelope ID: B96FFCF9-4238-4A0A-8697-95D1CC5B3FC1

CITY OF ASHEVILLE DETAILS

HINDE ENGINEERING
License No. C-2639
401 Harrison Oaks Blvd., Suite 220 Cary, NC 27513

DOCUMENT NOT CONSIDERED FINAL UNLESS ALL SIGNATURES COMPLETED

PROJECT REFERENCE NO.	SHEET NO.
I-2513 AA/AB	UC-3D
DESIGNED BY: JKC	
DRAWN BY: JKC	
CHECKED BY: CLS	
APPROVED BY: CDB	
REVISED:	
NORTH CAROLINA DEPARTMENT OF TRANSPORTATION	
UTILITIES ENGINEERING SEC. PHONE:(919)707-6690 FAX:(919)250-4151	UTILITY CONSTRUCTION PLANS ONLY

NORTH CAROLINA PROFESSIONAL SEAL 023041 ENGINEER CAREY D BOUSQUET
DocuSigned by: Carey D. Bousquet, P.E.
5E23F92887BC49A...
9/20/2023

UTILITY CONSTRUCTION

TRENCH DETAIL

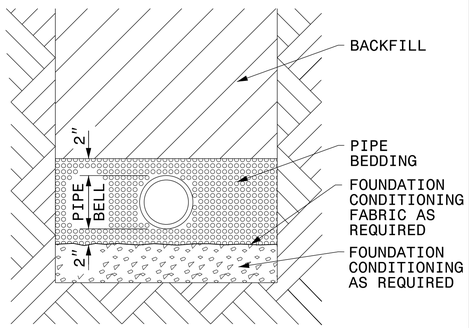

PLACE FOUNDATION CONDITIONING MATERIAL BELOW BEDDING IF REQUIRED, AS DIRECTED BY ENGINEER. PIPE BEDDED IN SELECT MATERIAL, CLASS II (TYPE 1) OR CLASS III. TRENCH BACKFILLED IN LOOSE 6" LAYERS COMPACTED TO TOP OF TRENCH USING LOCAL EXCAVATED MATERIAL IF APPROVED BY THE ENGINEER, OR SELECT MATERIAL. ALL MATERIAL SHALL BE FREE OF ROCKS, FOREIGN MATERIAL, AND FROZEN EARTH. COMPACTION SHALL BE TO APPROXIMATELY 95% DENSITY IN ACCORDANCE WITH AASHTO T-99 AS MODIFIED BY THE DEPARTMENT OF TRANSPORTATION.

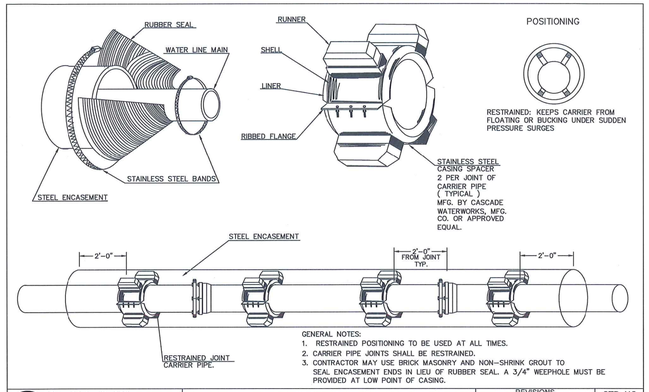

GENERAL NOTES:
1. RESTRAINED POSITIONING TO BE USED AT ALL TIMES.
2. CARRIER PIPE JOINTS SHALL BE RESTRAINED.
3. CONTRACTOR MAY USE BRICK MASONRY AND NON-SHRINK GROUT TO SEAL ENCASEMENT ENDS IN LIEU OF RUBBER SEAL. A 3/4" WEEPHOLE MUST BE PROVIDED AT LOW POINT OF CASING.

City of Asheville, NC WATER ENGINEERING DIVISION	CARRIER PIPE IN STEEL ENCASEMENT	REVISIONS DATE / DESCRIPTION: 6/2015 REVISED	STD. NO. W.26

GENERAL NOTES:
1. VALVE BOX SHALL NOT CONTACT WATER MAIN OR VALVE.
2. VALVE PAD REQUIREMENTS SHALL NOT BE APPLICABLE FOR IMPROVED PAVED SURFACES.
3. VALVE BOX ADJUSTMENT MUST BE DONE BY ADJUSTING/RAISING THE TOP SECTION OF THE EXISTING ADJUSTABLE SCREW-TYPE VALVE BOX TO GRADE, OR BY INSTALLING A NEW VALVE BOX TOP SECTION. THE USE OF PAVING RINGS OR ADJUSTING C.I. SLEEVES IS NOT ALLOWED.

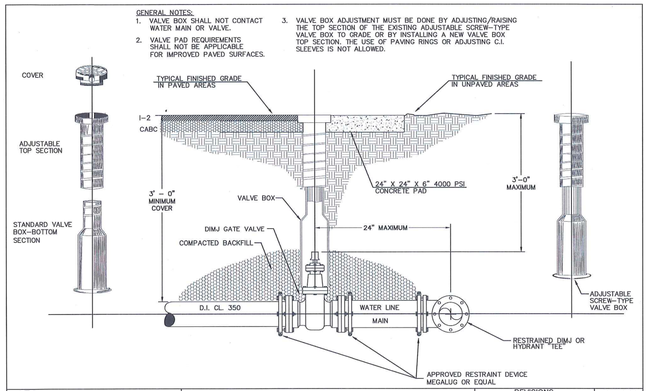

City of Asheville, NC WATER ENGINEERING DIVISION	TYPICAL VALVE & VALVE BOX INSTALLATION / ADJUSTMENT	REVISIONS DATE / DESCRIPTION: 6/2015 REVISED	STD. NO. W.18

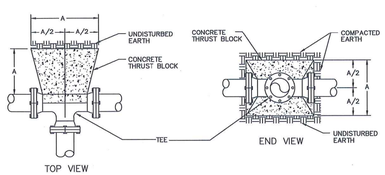

RECOMMENDED MINIMUM RESTRAINED LENGTH REQUIRED EACH SIDE OF FITTING (FEET)

FITTING TYPE	SIZE	WORKING PRESSURE (PSI) 125	150	175	200
HORIZ. 11 1/4 DEG.	6"	4	4	5	6
	8"	5	6	7	8
	10"	6	7	8	9
HORIZ. 22 1/2 DEG.	6"	7	9	10	12
	8"	10	12	14	16
	10"	12	14	17	19
REDUCER	8"X6"	14	17	20	23
	10"X8"	14	17	20	23
	12"X10"	14	17	20	23
HORIZ. 45 DEG.	6"	16	20	23	26
	8"	20	24	28	32
	10"	25	30	35	40
DEAD END	6"	24	29	34	39
	8"	34	41	48	55
	10"	42	50	59	67
TEE	TO BE CALCULATED ON A CASE BY CASE BASIS.				
90 DEG. VERT. BENDS	TO BE CALCULATED ON A CASE BY CASE BASIS.				

= 1 JOINT EQUIVALENT = 2 JOINTS EQUIVALENT
= 3 JOINTS EQUIVALENT = 4 JOINTS EQUIVALENT

GENERAL NOTES:
1. RESTRAINED JOINTS BY AN APPROVED PIPE MANUFACTURER ARE TO BE USED FOR ALL PUBLIC WATERLINES. THRUST BLOCKS ARE PERMITTED WHERE THE USE OF MECHANICAL RESTRAINT IS NOT FEASIBLE.
2. DIMENSION TABLE GIVEN IS A GUIDE ONLY. TO ENGINEER SHALL BE RESPONSIBLE TO CALCULATE THRUST BLOCK DIMENSIONS AND/OR BASED ON RESTRAINED LENGTH ACTUAL SOIL AND OPERATING PRESSURE CONDITIONS.
3. FITTING JOINTS SHALL BE KEPT FREE OF CONCRETE. A LAYER OF POLYETHYLENE PLASTIC SHALL BE PLACED BETWEEN THE FITTING AND THE CONCRETE.
4. PRE-CAST THRUST BLOCKS ARE NOT ACCEPTABLE.
5. CONCRETE SHALL HAVE 4000 P.S.I. COMPRESSIVE STRENGTH.

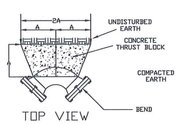

TABLE OF "A" DIMENSIONS (IN FEET)

BEND	90	45	22 1/2	11 1/4	TEE
PIPE SIZE (NOMINAL DIAMETER IN INCHES) 6	1.4	1.1	1.0	1.0	1.2
8	1.9	1.5	1.5	1.5	1.6
10	2.4	1.8	1.8	1.8	2.0
12	2.8	2.1	2.0	2.0	2.4
16	3.8	2.8	2.5	2.5	2.8
24	5.6	4.2	3.0	3.0	4.5

City of Asheville, NC WATER ENGINEERING DIVISION	THRUST BLOCK FOR FITTINGS & RESTRAINING REQUIREMENTS	REVISIONS DATE / DESCRIPTION: 6/2015 REVISED	STD. NO. W.22

GENERAL NOTES:
1. VALVE BOX NOT TO CONTACT WATER MAIN OR VALVE OR COMPACTED BACKFILL UNDER VALVE BOX.
2. ALL FITTINGS AND APPURTENANCES SHALL BE RESTRAINED AS PER SPECIFICATIONS IN LIEU OF THRUST BLOCKING.
2. VALVE PAD REQUIREMENTS SHALL NOT BE APPLICABLE FOR IMPROVED PAVED SURFACES.
3. VALVE BOX ADJUSTMENT MUST BE DONE BY ADJUSTING/RAISING THE TOP SECTION OF THE EXISTING ADJUSTABLE SCREW-TYPE VALVE BOX TO GRADE OR BY INSTALLING A NEW VALVE BOX TOP SECTION. THE USE OF PAVING RINGS OR ADJUSTING C.I. SLEEVES IS NOT ALLOWED.

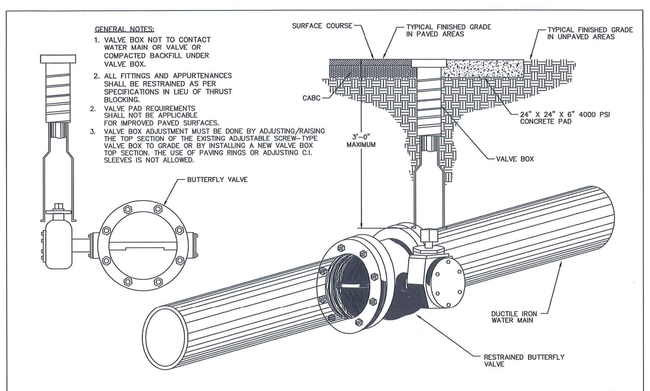

City of Asheville, NC WATER ENGINEERING DIVISION	TYPICAL BUTTERFLY VALVE INSTALLATION	REVISIONS DATE / DESCRIPTION: 6/2015 REVISED	STD. NO. W.19

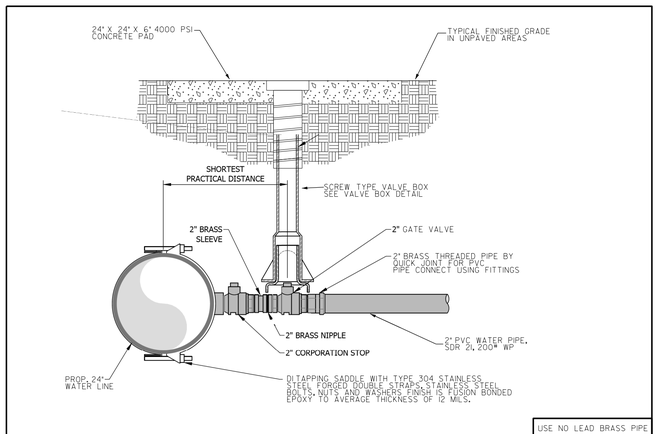

USE NO LEAD BRASS PIPE

TYPICAL 2" WATER LINE CONNECTION

09-SEP-2023 12:45
S:\PROJECTS\2020\A2020901.00_AECOM_I-2513AA&AB\Design\Utilities\Engineering\UC\Proj\I2513AA_ut_dtl_UC3D_psh.dgn
$$$$USERNAME$$$$