DocuSign Envelope ID: B96FFCF9-4238-4A0A-8697-95D1CC5B3FC1

METROPOLITIAN SEWERAGE DISTRICT DETAILS

HINDE ENGINEERING
License No. C-2639
401 Harrison Oaks Blvd., Suite 220 Cary, NC 27513

DOCUMENT NOT CONSIDERED FINAL UNLESS ALL SIGNATURES COMPLETED

PROJECT REFERENCE NO.	SHEET NO.
I-2513 AA/AB	UC-3C
DESIGNED BY: JKC	
DRAWN BY: JKC	
CHECKED BY: CLS	
APPROVED BY: CDB	
REVISED:	
NORTH CAROLINA DEPARTMENT OF TRANSPORTATION	
UTILITIES ENGINEERING SEC. PHONE:(919)707-6690 FAX:(919)250-4151	UTILITY CONSTRUCTION PLANS ONLY

NORTH CAROLINA PROFESSIONAL SEAL ENGINEER COREY D BOUSQUET
DocuSigned by: Corey Bousquet, PE
SEAL 042041
5A29F92887BC49A...
9/20/2023

UTILITY CONSTRUCTION

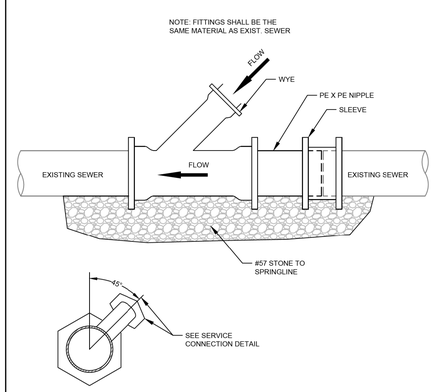

NOT FOR USE ON NEW CONSTRUCTION.

STANDARD DETAIL
Metropolitan Sewerage District
of Buncombe County, North Carolina
SERVICE CONNECTION TO EXISTING SEWER
DATE APPROVED: MARCH 2017 | 2.07 - 01

NOTES:

1. WYE CONNECTIONS ARE STANDARD FOR NEW SEWER MAIN CONSTRUCTION.
2. FORCE MAINS CARRYING DOMESTIC WASTEWATER FROM SANITARY CONVENIENCES WITHIN A SINGLE BUILDING, MAY BE CONNECTED TO A 4" MSD GRAVITY SERVICE LINE PROVIDED THAT GRAVITY FLOW WILL BE MAINTAINED DURING PROPOSED MAXIMUM DISCHARGE RATE FOR THE GRINDER OR EFFLUENT PUMP(S).
3. WHERE COVER IS LESS THAN 3 FT. DUCTILE IRON MUST BE USED.
4. WHERE DUCTILE IRON IS REQUIRED RISER MAY BE CONSTRUCTED WITH SCH. 40 PVC

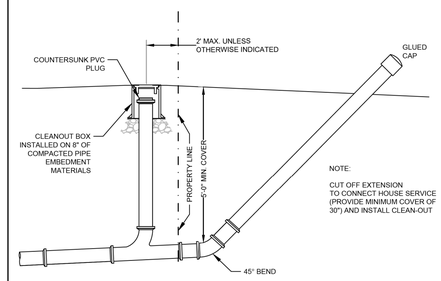

NOTE:

CUT OFF EXTENSION TO CONNECT HOUSE SERVICE (PROVIDE MINIMUM COVER OF 30") AND INSTALL CLEAN-OUT

CONNECT TO EXISTING SEWER SERVICE WITH APPROVED COUPLING OR INSTALL PVC PLUG FOR FUTURE SERVICE. WHEN REQUIRED BACKFLOW VALVES SHALL BE INSTALLED ON PORTION OF LATERAL TO BE MAINTAINED BY PROPERTY OWNER.

SEE DETAIL 2.07-03 FOR ADDITIONAL NOTES

STANDARD DETAIL
Metropolitan Sewerage District
of Buncombe County, North Carolina
SANITARY SEWER SERVICE MORE THAN 5' DEEP
DATE APPROVED: MARCH 2017 | 2.07 - 04

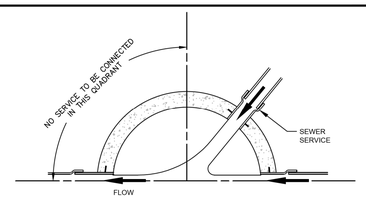

PLAN
N.T.S.

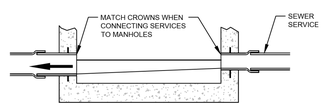

SECTION
N.T.S.

STANDARD DETAIL
Metropolitan Sewerage District
of Buncombe County, North Carolina
SERVICE CONNECTIONS AT MANHOLES
DATE APPROVED: MARCH 2017 | 2.11 - 07.1

NOTES:

1. WYE CONNECTIONS ARE STANDARD FOR NEW SEWER MAIN CONSTRUCTION.
2. FORCE MAINS CARRYING DOMESTIC WASTEWATER FROM SANITARY CONVENIENCES WITHIN A SINGLE BUILDING, MAY BE CONNECTED TO A 4" MSD GRAVITY SERVICE LINE PROVIDED THAT GRAVITY FLOW WILL BE MAINTAINED DURING PROPOSED MAXIMUM DISCHARGE RATE FOR THE GRINDER OR EFFLUENT PUMP(S).
3. WHERE COVER IS LESS THAN 3 FT. DUCTILE IRON MUST BE USED.
4. WHERE DUCTILE IRON IS REQUIRED RISER MAY BE CONSTRUCTED WITH SCH. 40 PVC

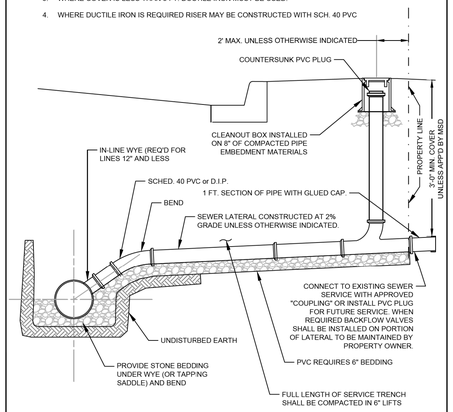

STANDARD DETAIL
Metropolitan Sewerage District
of Buncombe County, North Carolina
SANITARY SEWER SERVICE LESS THAN 5' DEEP
DATE APPROVED: MARCH 2017 | 2.07 - 03

09-SEP-2023 12:44
S:\Proj\PROJECTS\2020\A2020901.00_AECOM_I-2513AA&AB\Design\Utilities\Engineering\UC\Proj\I2513AA_ut_dtl_UC3C_psh.dgn
$$$$USER$$$$
$$$$DATE$$$$
$$$$TIME$$$$
$$$$FRAME$$$$