DocuSign Envelope ID: 8F366873-9B93-4429-91C2-7188E4B0B581

PROJECT I.D. NO.	SHEET NO.
I-2513 AA/AB	Sig.M3

Fabrication Details – Strain Poles

NOTE:

1. OPENING IN POLE BASE PLATE SHALL BE EQUAL TO POLE BASE INSIDE DIAMETER MINUS 3½" BUT SHALL NOT BE LESS THAN 8½".

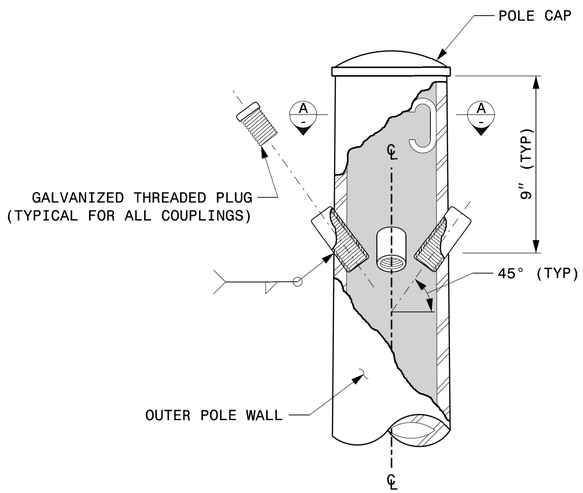

CABLE ENTRANCES AT TOP OF POLE

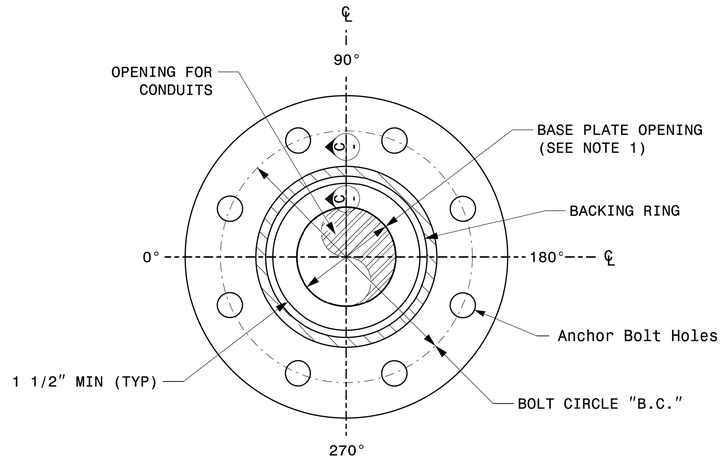

SECTION B-B

POLE BASE PLATE DETAILS
(8 AND 12 BOLT PATTERN)

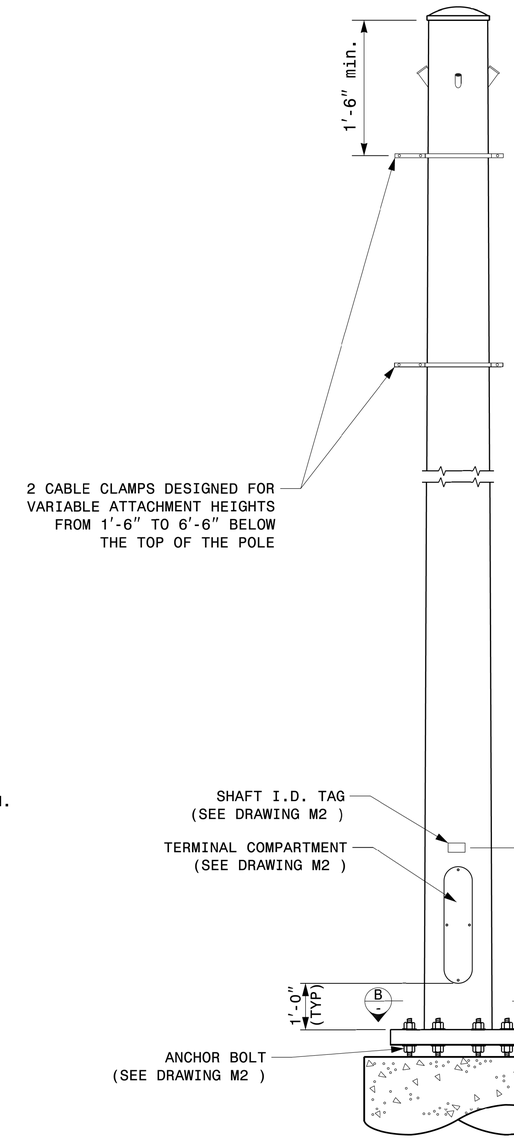

MONOTUBE STRAIN POLE

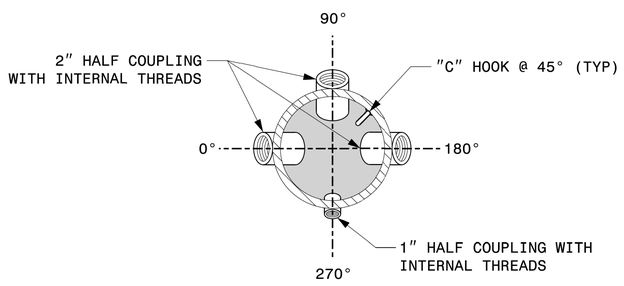

SECTION A-A

RADIAL ORIENTATION OF FACTORY INSTALLED ACCESSORIES AT TOP OF POLE

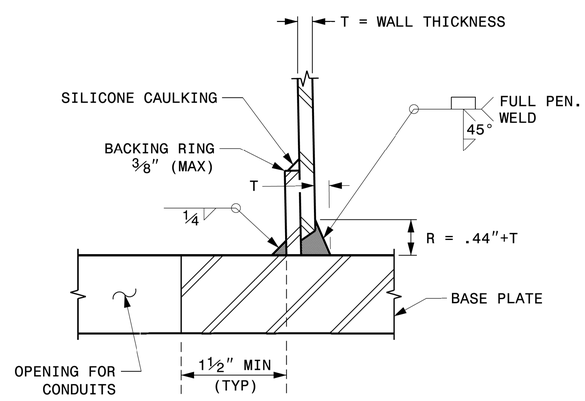

SECTION C-C

(POLE ATTACHMENT TO BASE PLATE)

FULL-PENETRATION GROOVE WELD DETAIL

Prepared in the Offices of:
Transportation Mobility and Safety Division
Signal Design Section
750 N.Greenfield Pkwy,Garner,NC 27529

SCALE
0 NA
NONE

Typical Fabrication Details
For
Strain Poles

PLAN DATE:	SEPTEMBER 2023	DESIGNED BY:	K.C. DURIGON
PREPARED BY:	K.C. DURIGON	REVIEWED BY:	D.C. SARKAR

REVISIONS	INIT.	DATE

SEAL
NORTH CAROLINA PROFESSIONAL SEAL 036626 ENGINEER KEVIN C. DURIGON

DocuSigned by:
Kevin Durigon
SIGNATURE
4B23DC79B3784DA...
09/21/2023
DATE

03-OCT-2023 12:31
S:*HITSAGUTS's Signals*Signal Design Section*Structures*Drawings*2024 Metal Pole Std Drawings for LBFD*2024 Sig-M3 Std. Fabrication Details-Strain Poles.dgn
kcdurigon