DocuSign Envelope ID: 110CAB6E-CD05-401F-9EE1-84F6649EA05A

8/17/99

REVISIONS

PROJECT TYPICAL DETAILS

WETHERILL ENGINEERING
1223 Jones Franklin Rd.
Raleigh, N.C. 27606
License No. F-0377
Bus: 919 851 8077
Fax: 919 851 8107
TRANSPORTATION PLANNING/DESIGN - BRIDGE/STRUCTURE DESIGN
CIVIL/SITE DESIGN - GIS/GPS - SURVEY/SUE - UTILITIES - CONSTRUCTION OBSERVATION

PROJECT REFERENCE NO.	SHEET NO.
BR-0062	UC-3A
DESIGNED BY: TWR	8/22/2024
DRAWN BY: TWR	
CHECKED BY: PKP	
APPROVED BY: SLK	
REVISED:	
NORTH CAROLINA DEPARTMENT OF TRANSPORTATION	
UTILITIES ENGINEERING SEC. PHONE:(919)707-6690 FAX:(919)250-4151	UTILITY CONSTRUCTION PLANS ONLY

NORTH CAROLINA PROFESSIONAL SEAL 10773 ENGINEER EDWARD G. WETHERILL
Developed by: Edward G. Wetherill

DOCUMENT NOT CONSIDERED FINAL UNLESS ALL SIGNATURES COMPLETED

UTILITY CONSTRUCTION

TRENCH DETAIL

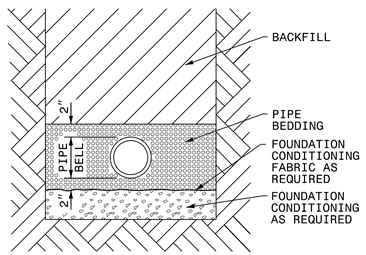

PLACE FOUNDATION CONDITIONING MATERIAL BELOW BEDDING IF REQUIRED, AS DIRECTED BY ENGINEER. PIPE BEDDED IN SELECT MATERIAL, CLASS II (TYPE 1) OR CLASS III. TRENCH BACKFILLED IN LOOSE 6" LAYERS COMPACTED TO TOP OF TRENCH USING LOCAL EXCAVATED MATERIAL IF APPROVED BY THE ENGINEER, OR SELECT MATERIAL. ALL MATERIAL SHALL BE FREE OF ROCKS, FOREIGN MATERIAL, AND FROZEN EARTH. COMPACTION SHALL BE TO APPROXIMATELY 95% DENSITY IN ACCORDANCE WITH AASHTO T-99 AS MODIFIED BY THE DEPARTMENT OF TRANSPORTATION.

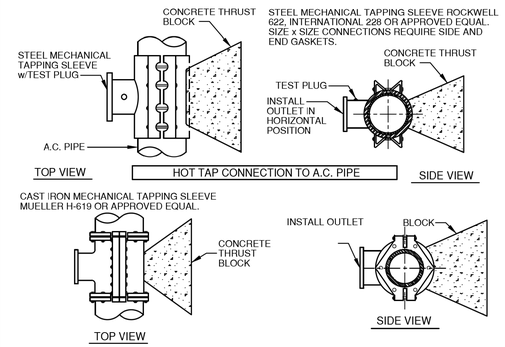

TYPICAL CONNECTION DETAILS TO A.C. WATER LINE

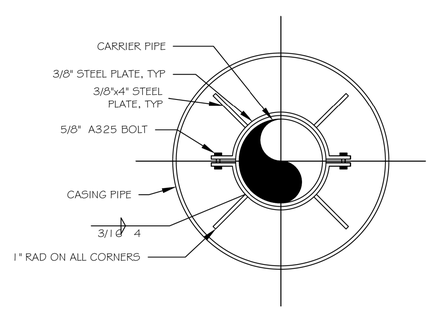

NOTE:

1) USE A MINIMUM OF TWO SPIDERS PER PIPE JOINT ONE FOURTH OF THE PIPE JOINT LENGTH IN FROM BOTH THE BELL AND SPIGOT ENDS.

STANDARD ENCASEMENT PIPE DETAIL

AIR RELIEF MH VALVE & FITTING SCHEDULE

NO.	DESCRIPTION	SIZE	JOINT
1	KOR-N-SEAL MANHOLE BOOT	12"	-
2	PIPE	12"	-
3	LONG SLEEVE	12"	MJ
4	BRASS NIPPLE WITH TAP & ANVELET	1"	THD
5	BRASS BALL VALVE	1"	THD
6	AIR RELEASE VALVE (APCO 145C)	1"	THD
7	BRASS PIPE	1"	THD
8	BRASS 90° BENO	1"	THD
9	BRASS UNION	1"	THD
10	BRASS COUPLING	1"	THD
11	PVC PIPE SCH 40	1"	THD
12	PVC 90° BEND SCH 40	1"	THD
13	BRASS REDUCING TEE	1" X ½"	THD
14	BRASS PIPE	½"	THD
15	BRASS BALL VALVE	½"	THD
16	FLOOR DRAIN	4" X 2"	-
17	PIPE SUPPORT (GRINNELL 254 OR APROVE EQUAL)	SIZED FOR PIPE	

NOTE:

1. HOT DIP GALVANIZE AIR RELIEF VENT STAND PIPE COVER AFTER FABRICATION.
2. AIR RELIEF VENT STAND PIPE SHALL BE LOCATED IN FIELD AS DIRECTED BY ENGINEER.
3. PROVIDE THRUST RESTRAINT FOR ALL FITTINGS.

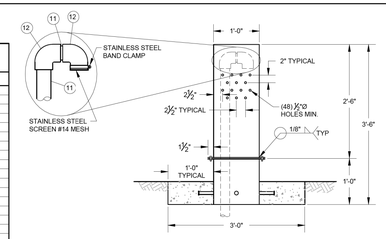

AIR RELIEF VENT STAND PIPE COVER DETAIL
N.T.S.

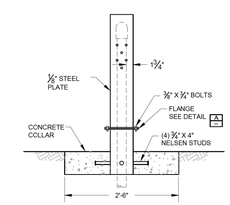

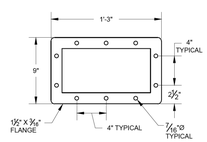

FLANGE DETAIL A
N.T.S.

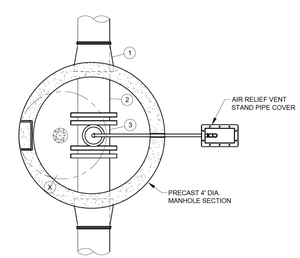

AIR RELIEF / VACUUM VALVE DETAIL
N.T.S.

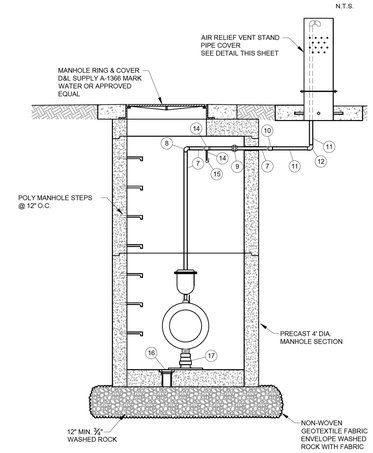

SECTION 1
N.T.S.

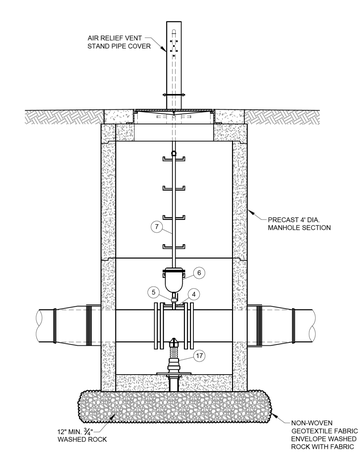

SECTION 2
N.T.S.

AIR RELEASE VALVE ASSEMBLY

10/16/2023
BR-0062_ut_UC3_notes_details.dgn
USER: TBeaver