DocuSign Envelope ID: EBDE42FC-C0DE-4D6C-AA89-3EEAA9FEA8D2

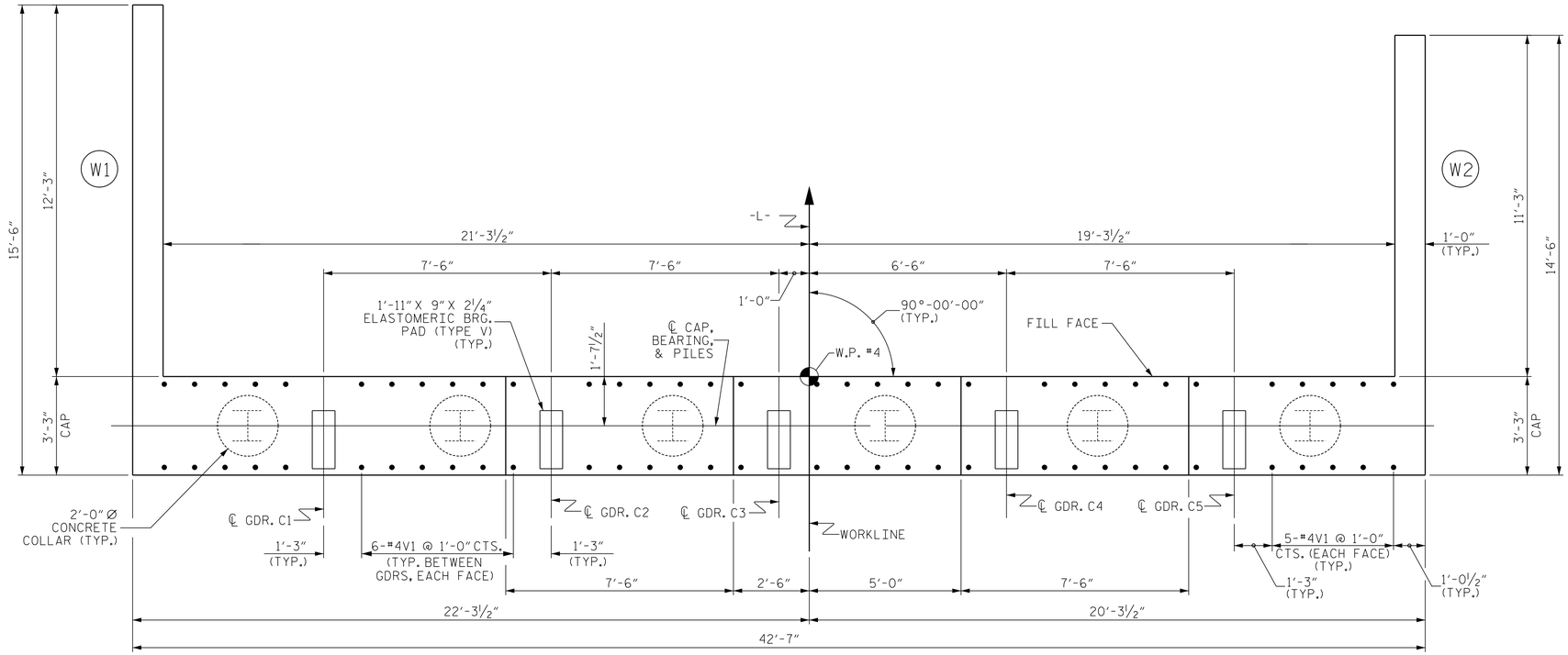

PLAN

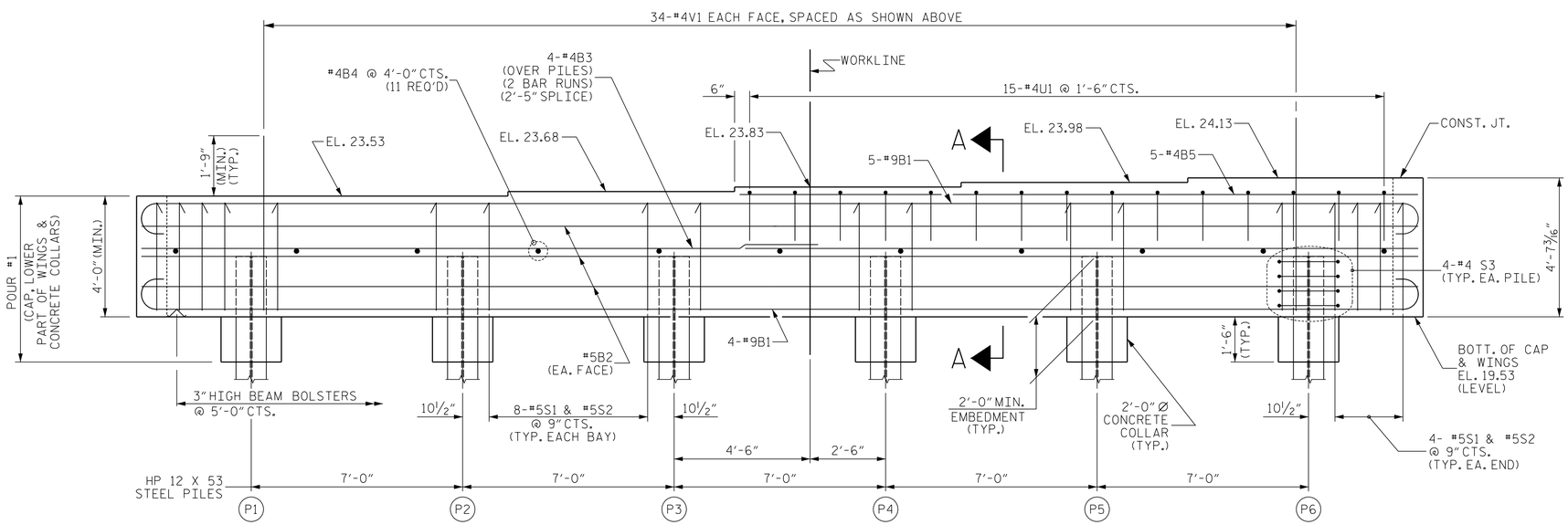

ELEVATION

NOTES

STIRRUPS IN THE CAP MAY BE SHIFTED AS NECESSARY TO CLEAR #4 V1 BARS.

SEE THE SUPERSTRUCTURE SHEETS FOR FOR UPPER PART OF INTEGRAL END BENT DETAIL.

THE UPPER PART OF INTEGRAL PORTION AND WINGS SHALL BE POURED WITH THE SUPERSTRUCTURE. SEE SUPERSTRUCTURE PLAN OF SPANS.

THE TOP SURFACE OF POUR #1 OF THE END BENT CAP AND WINGS, EXCLUDING THE BEARING AREA, SHALL BE RAKED TO A DEPTH OF ¼".

FOR SECTION A-A, SEE SHEET 3 OF 3.

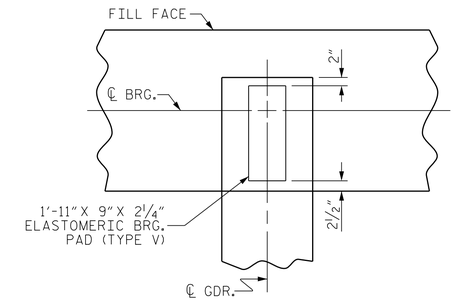

BRG. PAD DETAIL

PROJECT NO. B-4926

LENOIR COUNTY

STATION: 35+00.00 -L-

SHEET 1 OF 3

STATE OF NORTH CAROLINA
DEPARTMENT OF TRANSPORTATION
RALEIGH

SUBSTRUCTURE

INTEGRAL END BENT NO. 2

SEAL 042890 NORTH CAROLINA PROFESSIONAL ENGINEER PATRICK R. CALLAHAN

DOCUSIGNED BY: Patrick Callahan 6/7/2023 | 10:09 AM EDT

DOCUMENT NOT CONSIDERED FINAL UNLESS ALL SIGNATURES COMPLETED

Johnson, Mirmiran, & Thompson Inc.
4700 Falls of Neuse Rd, Suite 100,
Raleigh, NC, 27609
License No: C-3097

REVISIONS						
NO.	BY:	DATE:	NO.	BY:	DATE:	
1			3			
2			4			

SHEET NO. S2-34

TOTAL SHEETS 39

DWN. BY: WDC	DATE: 03/2023
CHKD. BY: PRG	DATE: 03/2023
DES. EGR. OF RECORD: PRG	DATE: 03/2023

wdcrutcher
DGN: V:\MCS\Structures\03141-01 - B-4926 Lenoir 20 &34\Structures\Lenoir 34\Plans\402_067_B4926_SMU_EB2_S34.dgn
TIME: 02:34 PM on Wednesday, September 06, 2023