DocuSign Envelope ID: 8D9DD5CE-C82A-448C-BE92-69EF089A271B

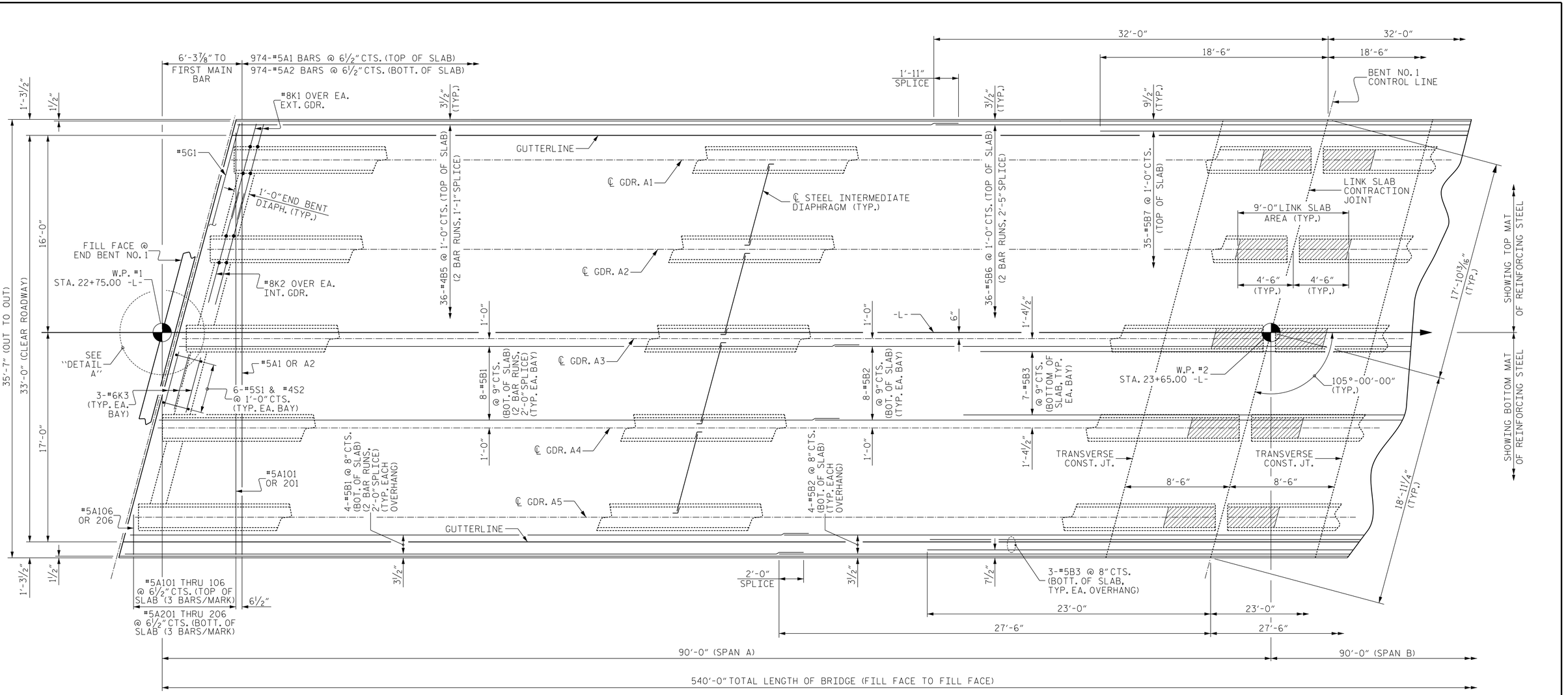

PLAN OF SPAN A

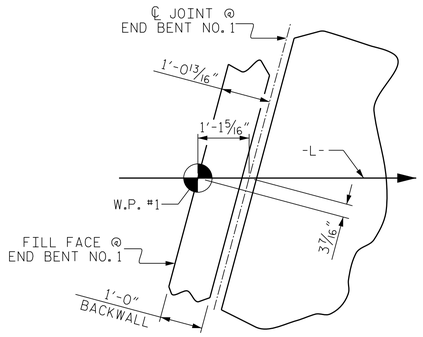

DETAIL A

PROJECT NO. B-4926

LENOIR COUNTY

STATION: 25+45.00 -L-

SHEET 1 OF 6

STATE OF NORTH CAROLINA
DEPARTMENT OF TRANSPORTATION
RALEIGH

SUPERSTRUCTURE
PLAN OF SPAN A

NORTH CAROLINA PROFESSIONAL ENGINEER SEAL 24892 PATRICK R. GALLAGHER 9/7/2023

DOCUMENT NOT CONSIDERED FINAL UNLESS ALL SIGNATURES COMPLETED

Johnson, Mirmiran, & Thompson Inc.
4700 Falls of Neuse Rd, Suite 100,
Raleigh, NC, 27609
License No: C-3097

REVISIONS						SHEET NO.
NO.	BY:	DATE:	NO.	BY:	DATE:	S1-11
1			3			TOTAL SHEETS
2			4			49

DWN. BY: WDC	DATE: 03/2023
CHKD. BY: PRG	DATE: 03/2023
DES. EGR. OF RECORD: PRG	DATE: 03/2023

wdcruther
DGN: V:\WC\Structures\03174\01 - B-4926 Lenoir 20 &34\Structures\Lenoir 20\Plans\401_021_B4926_SMU_PS01_01.dgn
TIME: 01:33 PM on Wednesday, September 06, 2023