DocuSign Envelope ID: 590FBF04-8ED4-463A-9C7B-221245F1170B

NOTES:

FOR NOTES, SEE SHEET 1 OF 5.

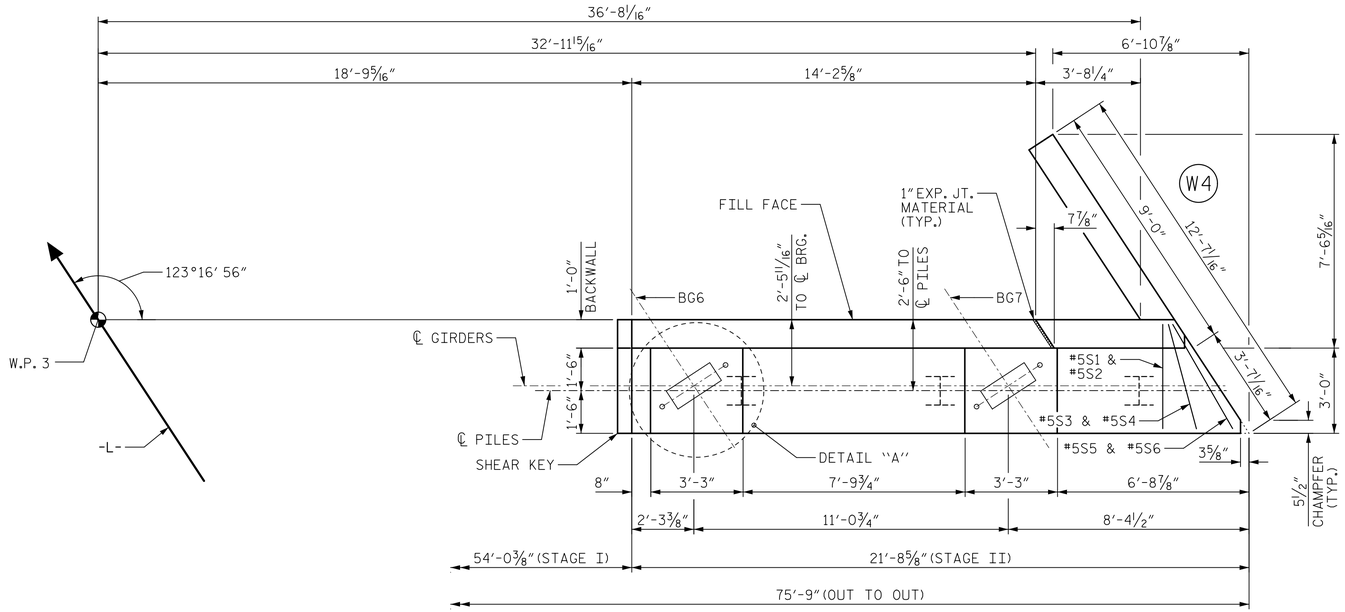

PLAN

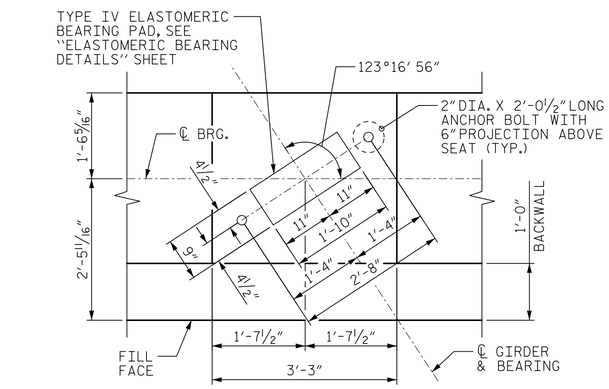

DETAIL "A"

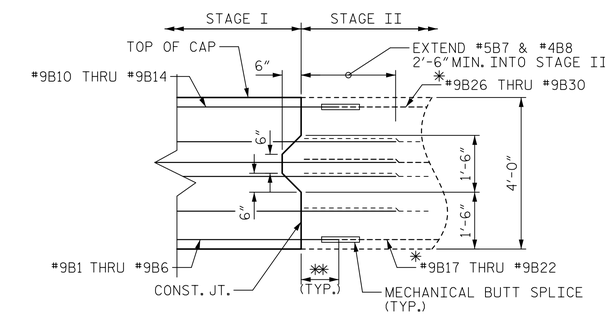

** STAGE I TOP AND BOTTOM "B" BARS ARE DETAILED WITH STAGGERED 1'-0" AND 2'-0" EXTENSIONS BEYOND CONSTRUCTION JOINT.

* PLACE ALL BARS IN STAGE II AT OR NEAR THE END OF BARS EXTENDING FROM STAGE I.

DETAIL "B"

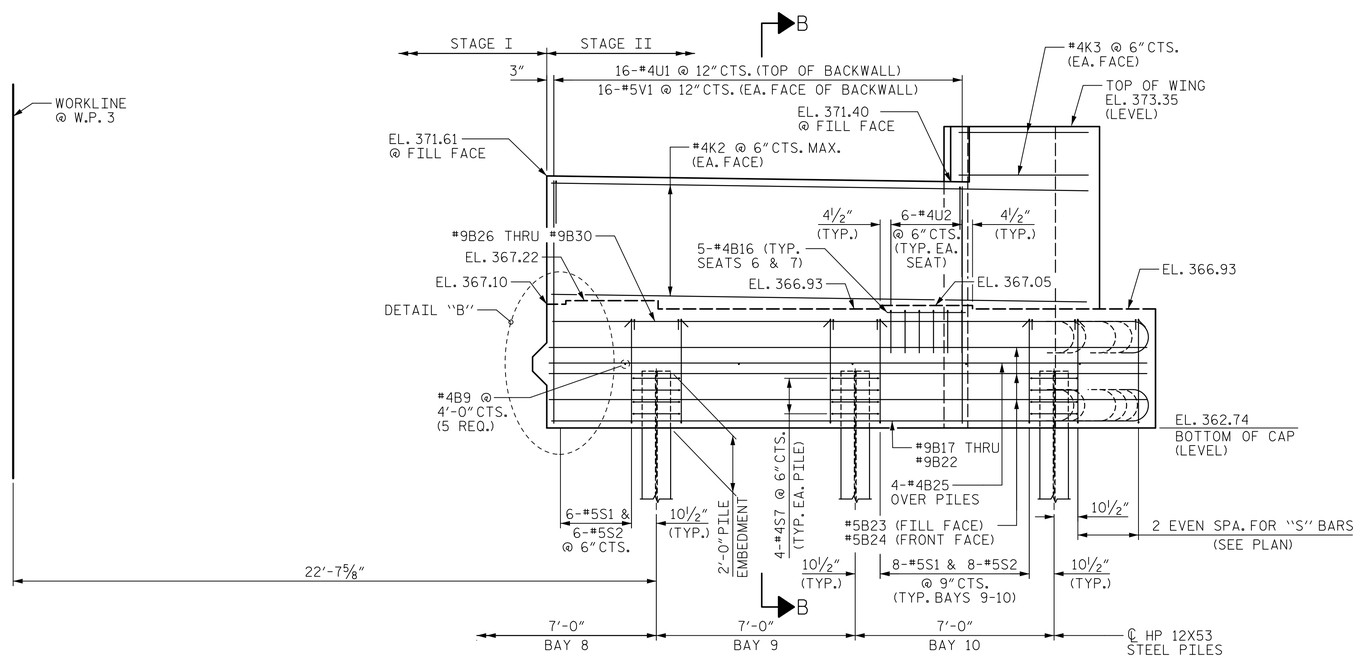

ELEVATION

PROJECT NO. B-4654

WAKE COUNTY

STATION: 22+71.80 -L-

SHEET 2 OF 5

AECOM

AECOM TECHNICAL SERVICES OF NC, INC.
5438 WADE PARK BOULEVARD, SUITE 200
RALEIGH, NC 27607
(919) 854-6200 www.aecom.com
AECOM License No. F-0342

NORTH CAROLINA PROFESSIONAL ENGINEER SEAL 030474 JOHN C. MORRISON

1/19/2023

DOCUMENT NOT CONSIDERED FINAL UNLESS ALL SIGNATURES COMPLETED

STATE OF NORTH CAROLINA
DEPARTMENT OF TRANSPORTATION
RALEIGH

SUBSTRUCTURE

END BENT 2 (STAGE II)

REVISIONS						SHEET NO.
NO.	BY:	DATE:	NO.	BY:	DATE:	S-42
1			3			TOTAL SHEETS
2			4			49

DRAWN BY :	T.B. STUMP	DATE :	02/2019
CHECKED BY :	J.C. MORRISON	DATE :	02/2019
DESIGNED BY :	D. RITACCO	DATE :	02/2019
DESIGN CHECKED BY :	J.C. MORRISON	DATE :	02/2019

DATE: 1/19/2023
TIME: 10:40:33 AM

USER: mdanick
DGN: \\vzpacomnet.com\M's\MEB\Raleigh-US\RAL3\Legacy\Projects\60456195-B-4654\900_Work\910_CADD\70_NCDOT_TIP\Structures\04_Drawings\20122_Updates\400_B3_S42_B4654_SMU_EB2_2.dgn