DocuSign Envelope ID: 590FBF04-8ED4-463A-9C7B-221245F1170B

NOTES:

STIRRUPS AND "U" BARS IN CAP MAY BE SHIFTED AS NECESSARY TO CLEAR ANCHORS.

BACKWALL SHALL BE PLACED BEFORE APPLYING THE EPOXY PROTECTIVE COATING

THE TOP SURFACE OF THE END BENT CAP EXCEPT THE BRIDGE SEAT BUILDUPS SHALL BE SLOPED TRANSVERSELY FROM THE FILL FACE TO THE FRONT FACE AT THE RATE OF 2%.

THE TOP SURFACE AREAS OF THE END BENT CAPS SHALL BE CURED IN ACCORDANCE WITH THE STANDARD SPECIFICATIONS, EXCEPT THE MEMBRANE CURING COMPOUND METHOD SHALL NOT BE USED.

MECHANICAL COUPLERS SHALL BE USED TO JOIN THE #9 "B" BARS IN STAGE I WITH THE #9 "B" BARS IN STAGE II.

FOR MECHANICAL COUPLERS, SEE MECHANICAL BUTT SPLICE FOR REINFORCING STEEL IN STANDARD SPECIFICATIONS.

CONTRACTORS ATTENTION IS CALLED TO THE FACT THAT THE LENGTHS OF THE #9 "B" BARS AT THE STAGE CONSTRUCTION JOINT MAY NEED TO BE ADJUSTED DUE TO THE TYPE OF MECHANICAL CUT SPLICE CHOSEN BY THE CONTRACTOR. NO ADDITIONAL PAYMENT WILL BE MADE FOR ANY ADJUSTMENTS.

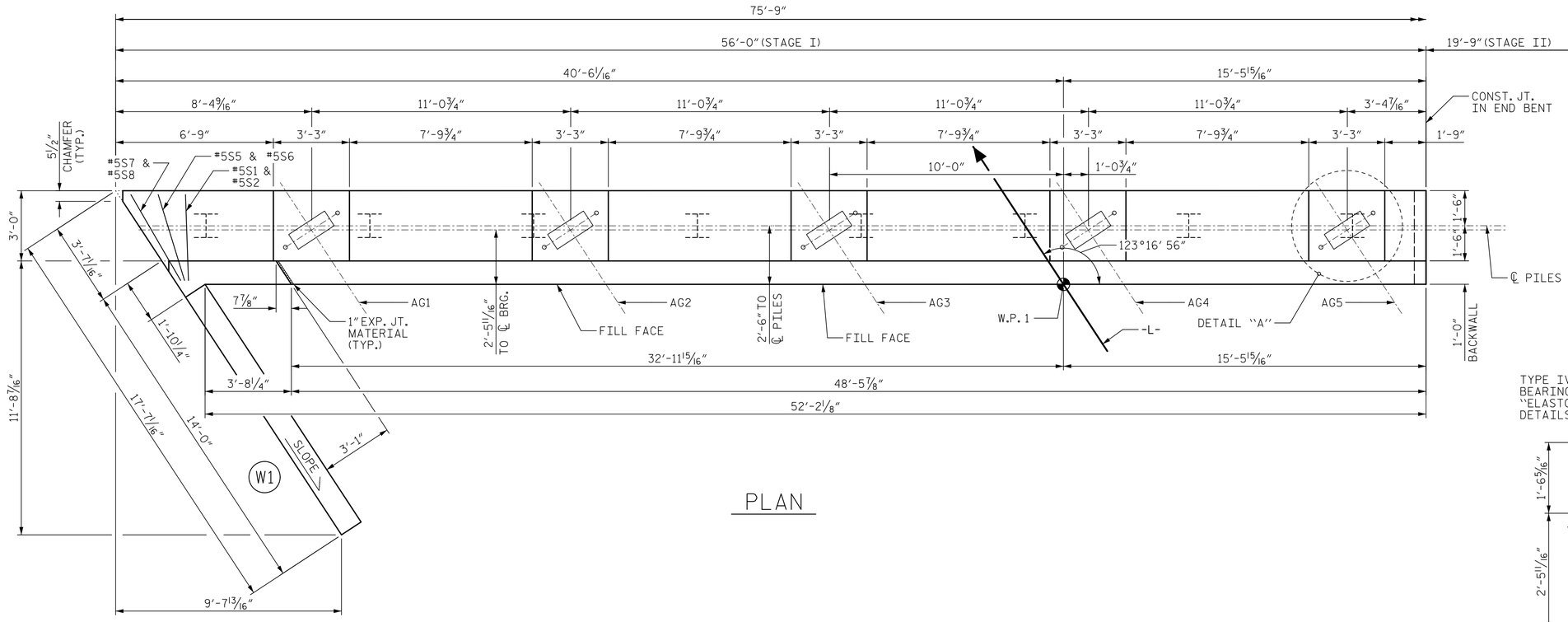

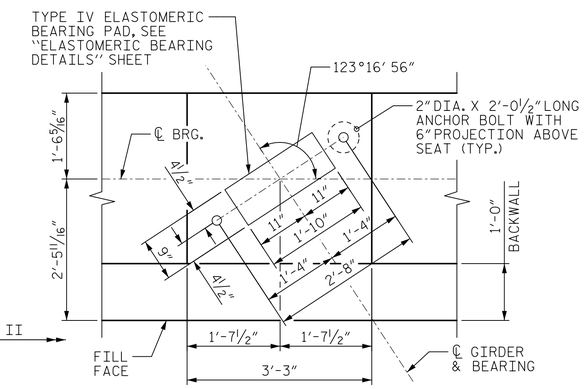

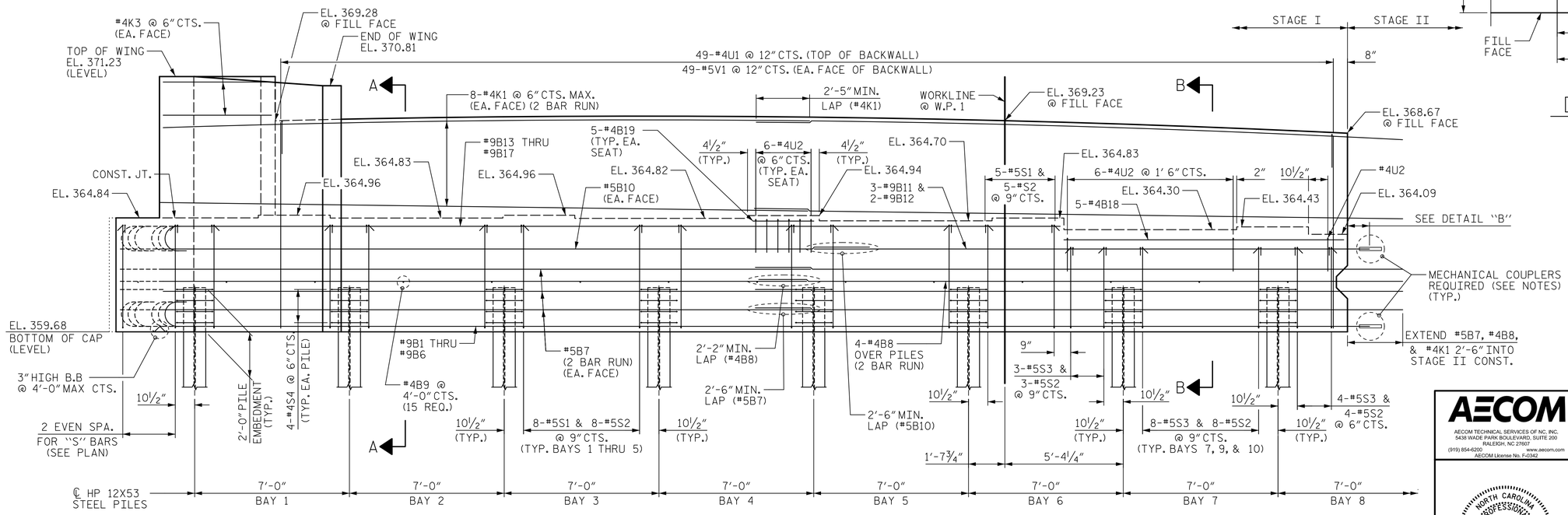

PROJECT NO. B-4654

WAKE COUNTY

STATION: 22+71.80 -L-

SHEET 1 OF 5

AECOM

AECOM TECHNICAL SERVICES OF NC, INC.
5438 WADE PARK BOULEVARD, SUITE 200
RALEIGH, NC 27607
(919) 854-6200 www.aecom.com
AECOM License No. F-0342

STATE OF NORTH CAROLINA
DEPARTMENT OF TRANSPORTATION
RALEIGH

SUBSTRUCTURE

END BENT 1 (STAGE I)

NORTH CAROLINA PROFESSIONAL SEAL 030474 ENGINEER JOHN C. MORRISON
1/19/2023

REVISIONS						SHEET NO.
NO.	BY:	DATE:	NO.	BY:	DATE:	S-33
1			3			TOTAL SHEETS
2			4			49

DRAWN BY : T.B. STUMP	DATE : 01/2019		
CHECKED BY : J.C. MORRISON	DATE : 01/2019		
DESIGNED BY : T.B. STUMP	DATE : 01/2019		
DESIGN CHECKED BY : J.C. MORRISON	DATE : 01/2019		

DOCUMENT NOT CONSIDERED FINAL UNLESS ALL SIGNATURES COMPLETED

DATE: 1/19/2023
TIME: 10:55:51 AM

USER: mstancik
DGN: \\bazbcomet.com\fs\AMER\Raleigh-US\RAL3\Legacy\Projects\60436595-B-4654\900_Work\90_CAD\TO_NCDOT_TIP\Structures\04 Drawings\2022 Updates\400_B5_S33_B4654_SMU_EB1_Jdgn