DocuSign Envelope ID: 254D0FAA-5F42-4F2E-8906-5788B1E1D1DF

NOTES

FOR SUPERSTRUCTURE NOTES, SEE "TYPICAL SECTION" SHEET 1 OF 3.

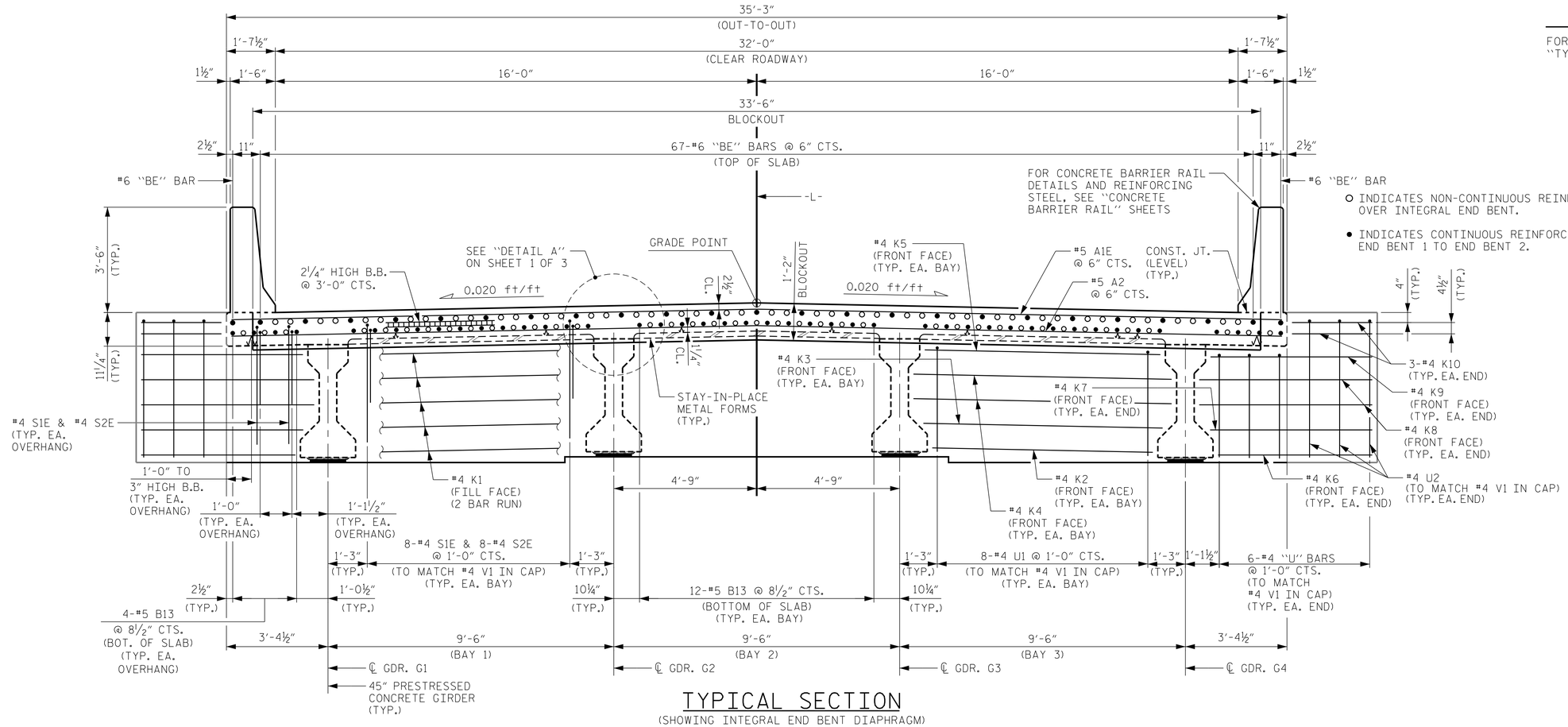

TYPICAL SECTION

(SHOWING INTEGRAL END BENT DIAPHRAGM)

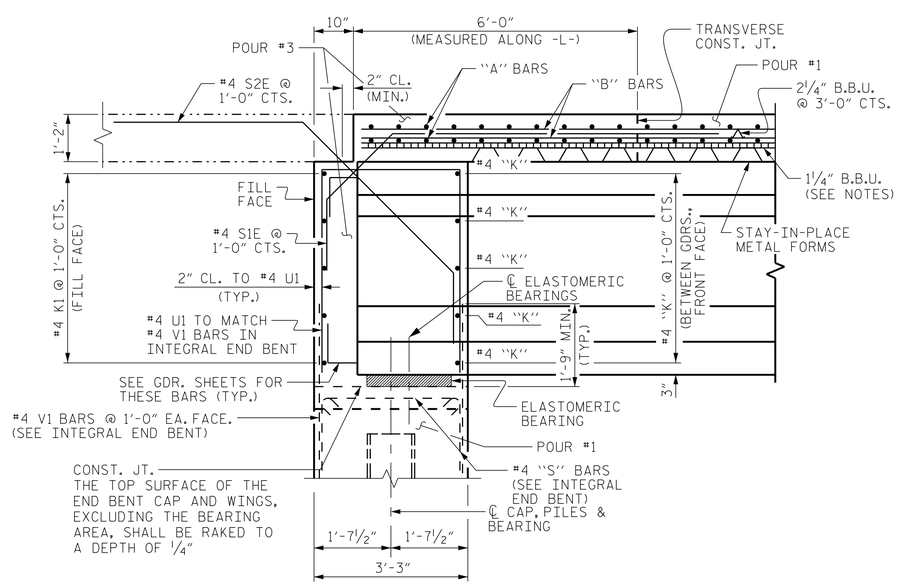

SECTION THRU INTEGRAL END BENT

(END BENT 1 SHOWN, END BENT 2 SIMILAR)

PROJECT NO. B-5156

PENDER COUNTY

STATION: 22+90.50 -L-

SHEET 2 OF 3

STATE OF NORTH CAROLINA
DEPARTMENT OF TRANSPORTATION
RALEIGH

SUPERSTRUCTURE

TYPICAL SECTION

NORTH CAROLINA PROFESSIONAL SEAL 047653 ENGINEER CLAY T. POOLE

DocuSigned by: Clay T Poole 5AE25ABE03D2425... 1/10/2024

Kimley»Horn
421 Fayetteville Street, Suite 600
Raleigh, NC 27601-1772
Phone (919) 677-2000
NC LICENSE # F-0102

This document, together with the concepts and designs presented herein, as an instrument of services, is intended only for the specific purpose and client for which it was prepared. Reuse of and improper reliance of this document without written authorization and adoption by Kimley-Horn and Associates, Inc. shall be without liability to Kimley-Horn and Associates, Inc.
Copyright Kimley-Horn and Associates, Inc., 2024

REVISIONS						
NO.	BY:	DATE:	NO.	BY:	DATE:	
1			3			
2			4			

SHEET NO. S-7

TOTAL SHEETS 45

DOCUMENT NOT CONSIDERED FINAL UNLESS ALL SIGNATURES COMPLETED

DRAWN BY: D. D. LOWERY DATE: 03/2023
CHECKED BY: A. L. PHILLIPS DATE: 03/2023
DESIGN ENGINEER OF RECORD: C.T. POOLE DATE: 03/2023

1/10/2024 K:\RDT_Structures\Bridge\NC\01103649 - B-5156\Cad\Dgn\B5156_SMU_TS2_700028.dgn