DocuSign Envelope ID: A77F627A-D704-4394-94F9-D7668E059C27

5/14/99

Kimley»Horn ©2024
300 MORRIS STREET, SUITE 200
DURHAM, NC 27701

PROJECT REFERENCE NO.	SHEET NO.
R-5963D	UC-3B
DESIGNED BY: NLH	
DRAWN BY: JNB	
CHECKED BY: NDR	
APPROVED BY: NLH	
REVISED:	
NORTH CAROLINA DEPARTMENT OF TRANSPORTATION	
UTILITIES ENGINEERING SEC. PHONE:(919)707-6690 FAX:(919)250-4151	UTILITY CONSTRUCTION PLANS ONLY

NORTH CAROLINA PROFESSIONAL SEAL 045249 ENGINEER NATHANIEL L. HARVEY 3/4/2024

UTILITY CONSTRUCTION

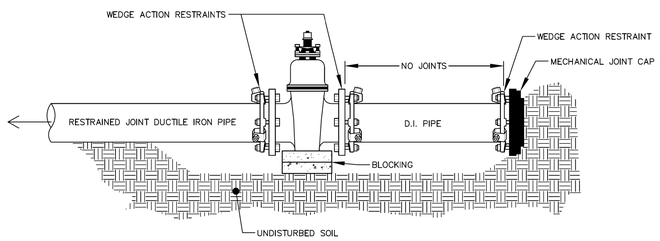

NOTES:
1. THIS DETAIL SHALL APPLY ONLY TO TEMPORARY CAPPING. PERMANENT DEAD END LINES TO BE IN ACCORDANCE WITH STANDARD DETAIL.
2. REQUIRED RESTRAINT AWAY FROM THE DEAD END MAY BE MJ PIPE WITH WEDGE ACTION RESTRAINTS FOR PIPE ≤ 12 INCH DIAMETER.

PITTSBORO NORTH CAROLINA 1787

EFFECTIVE: 2/14/22

STANDARD CAPPING DETAIL

TOWN OF PITTSBORO
STANDARD CONSTRUCTION DETAIL
STANDARD NO: PW-03-023

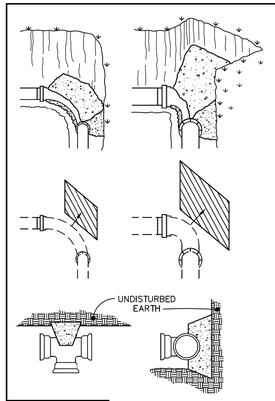

MINIMUM CONCRETE BLOCKING (C.Y.) *					
NOMINAL PIPE DIAMETER INCHES	TEES & DEAD ENDS	90° BEND	45° BEND	22½° BEND	11¼° BEND
4	⅓	⅓	⅓	⅓	⅓
6	⅓	⅓	⅓	⅓	⅓
8	⅓	½	⅓	⅓	⅓
10	⅔	¾	½	⅓	⅓
12	¾	1.0	⅔	⅓	⅓

NOTES:
1. FITTING SHALL BE WARAPPED WITH A MINIMUM 4 MIL PLASTIC.
2. NO CONCRETE SHALL COVER BOLTS OR GLANDS.
3. PIPE DIAMETERS BEYOND 12 INCHES SHALL UTILIZE A PROFESSIONS ENGINEER'S SEALED DESIGN CONSISTING OF RESTRAINED JOINT PIPE OR BLOCKING.
4. APPROPIATE CONCRETE FORMWORK SHALL BE PROVIDED
5. CONCRETE SHALL BE 3,000 P.S.I. MIX

PITTSBORO NORTH CAROLINA 1787

EFFECTIVE: 2/14/22

STANDARD REACTION BLOCKING

TOWN OF PITTSBORO
STANDARD CONSTRUCTION DETAIL
STANDARD NO: PW-03-025

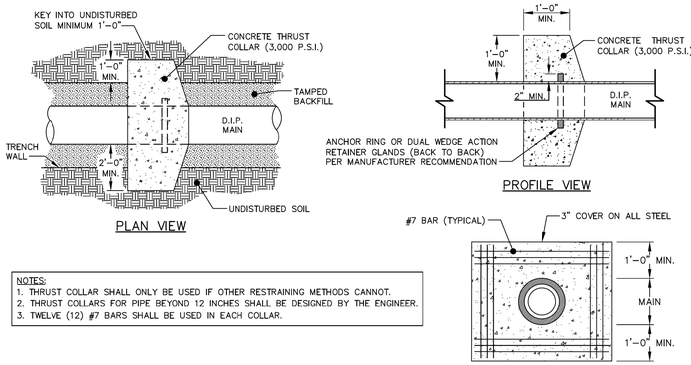

NOTES:
1. THRUST COLLAR SHALL ONLY BE USED IF OTHER RESTRAINING METHODS CANNOT.
2. THRUST COLLARS FOR PIPE BEYOND 12 INCHES SHALL BE DESIGNED BY THE ENGINEER.
3. TWELVE (12) #7 BARS SHALL BE USED IN EACH COLLAR.

PITTSBORO NORTH CAROLINA 1787

EFFECTIVE: 2/14/22

STANDARD THRUST COLLAR INSTALLATION (FOR PIPE DIAMETERS 4" - 12")

TOWN OF PITTSBORO
STANDARD CONSTRUCTION DETAIL
STANDARD NO: PW-03-026

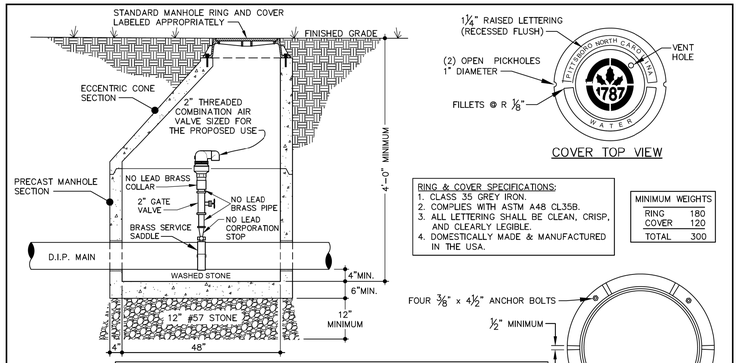

RING & COVER SPECIFICATIONS:
1. CLASS 35 GREY IRON.
2. COMPLIES WITH ASTM A48 CL35B.
3. ALL LETTERING SHALL BE CLEAN, CRISP, AND CLEARLY LEGIBLE.
4. DOMESTICALLY MADE & MANUFACTURED IN THE USA.

MINIMUM WEIGHTS	
RING	180
COVER	120
TOTAL	300

NOTES:
1. TAP SIZE AND ISOLATION VALVE TO BE SAME SIZE AS AIR VALVE.
2. ALL PIPING AND FITTINGS, IN THE MANHOLE, SHALL BE 'NO LEAD' BRASS OR BRONZE UNLESS NOTED.
3. ARV MANHOLE SHALL BE PROVIDED WITHOUT STEPS.
4. CONCENTRIC CONES MAY BE USED FOR AIR VALVE MANHOLES LESS THAN 5 FEET IN DEPTH.
5. RESILIENT CONNECTORS OR BOOTS MEETING ASTM C923 SHALL BE USED AT THE MANHOLE AND PIPE INTERFACE.
6. MANHOLES DEEPER THAN 12 FEET REQUIRE AN EXTENDED BASE.

PITTSBORO NORTH CAROLINA 1787

EFFECTIVE: 2/14/22

STANDARD 2" COMBINATION AIR VALVE (FOR POTABLE WATER SYSTEMS)

TOWN OF PITTSBORO
STANDARD CONSTRUCTION DETAIL
STANDARD NO: PW-03-027

2/16/2024