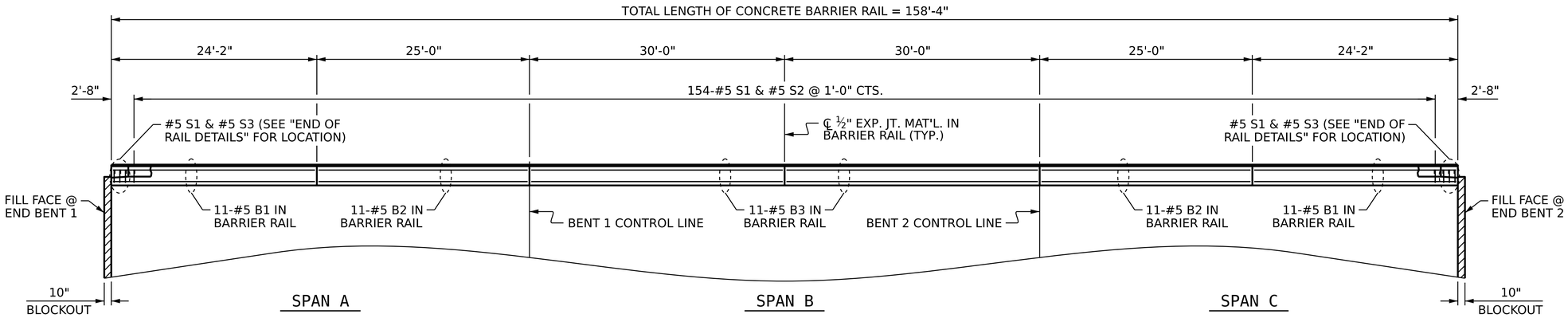

PLAN OF CONCRETE BARRIER RAIL

LEFT SIDE SHOWN, RIGHT SIDE SIMILAR BY ROTATION.
RAIL DIMENSIONS ARE MEASURED ALONG THE OUTSIDE FACE.

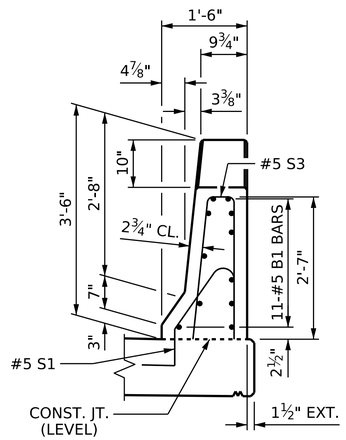

END VIEW

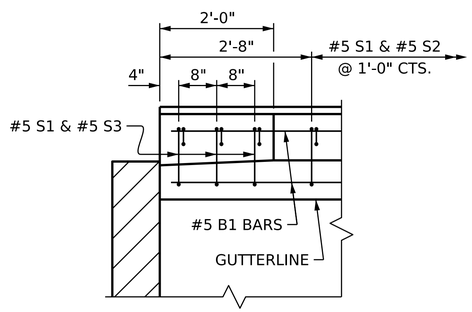

PLAN

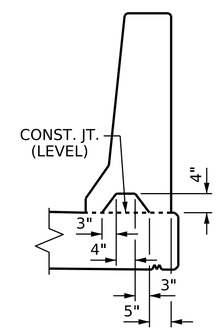

SECTION S-S

AT DAM IN OPEN JOINT
(THIS IS TO BE USED ONLY WHEN SLIP FORM IS USED)

NOTES

THE BARRIER RAIL IN A CONTINUOUS UNIT SHALL NOT BE CAST UNTIL ALL SLAB CONCRETE IN THE UNIT HAS BEEN CAST AND HAS REACHED A MINIMUM COMPRESSIVE STRENGTH OF 3,000 PSI.

ALL REINFORCING STEEL IN BARRIER RAILS SHALL BE EPOXY COATED.

GROOVED CONTRACTION JOINTS, ½" IN DEPTH, SHALL BE TOOLED IN ALL EXPOSED FACES OF THE BARRIER RAIL AND IN ACCORDANCE WITH ARTICLE 825-10(B) OF THE STANDARD SPECIFICATIONS. THE CONTRACTION JOINT SHALL BE LOCATED AT EACH THIRD POINT BETWEEN BARRIER RAIL EXPANSION JOINTS. ONLY ONE CONTRACTION JOINT IS REQUIRED AT MIDPOINT OF BARRIER RAIL SEGMENTS LESS THAN 20 FEET IN LENGTH, AND NO CONTRACTION JOINTS ARE REQUIRED FOR THOSE SEGMENTS LESS THAN 10 FEET IN LENGTH.

BAR TYPES

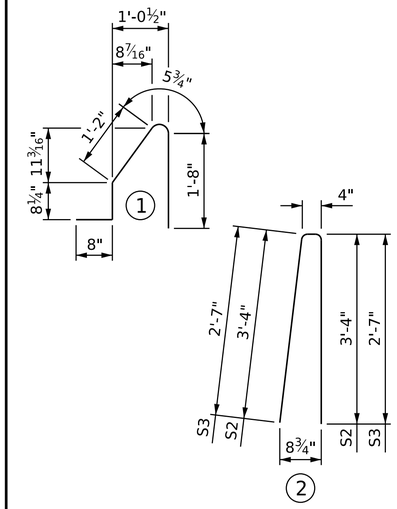

ALL BAR DIMENSIONS ARE OUT TO OUT.

BILL OF MATERIAL

FOR CONCRETE BARRIER RAIL ONLY

BAR	NO.	SIZE	TYPE	LENGTH	WEIGHT
*B1	44	#5	STR	23'-9"	1,090
*B2	44	#5	STR	24'-7"	1,128
*B3	44	#5	STR	29'-7"	1,358
*S1	320	#5	1	4'-8"	1,558
*S2	308	#5	2	7'-0"	2,249
*S3	12	#5	STR	5'-6"	69

* EPOXY COATED REINFORCING STEEL	7,452 LBS.
CLASS AA CONCRETE	43.0 C. Y.
CONCRETE BARRIER RAIL	316.67 LIN. FT.

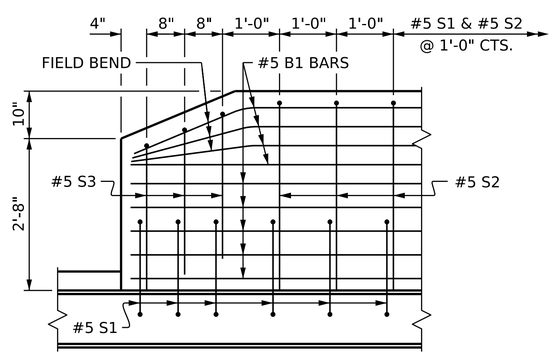

SIDE VIEW

END OF RAIL DETAILS

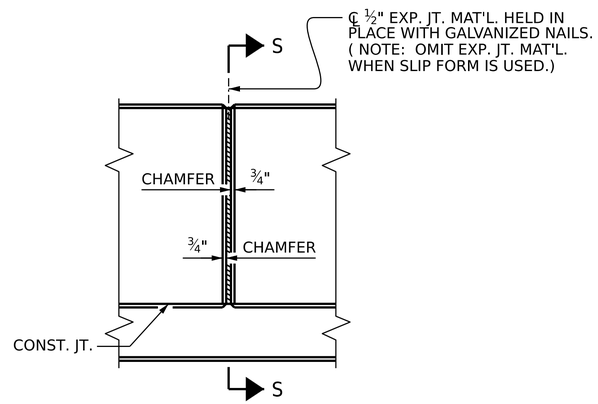

ELEVATION AT EXPANSION JOINTS

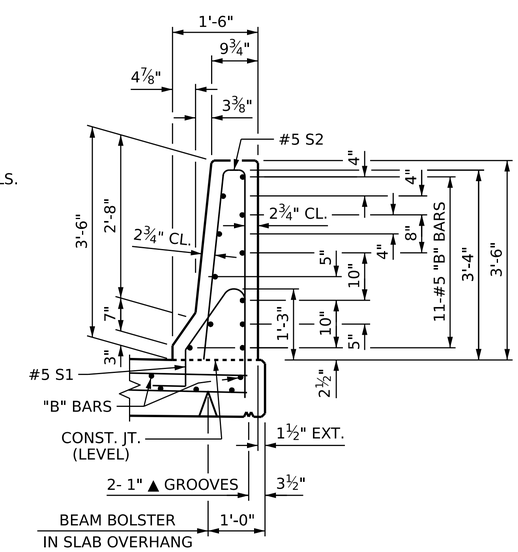

SECTION THRU RAIL

BARRIER RAIL DETAILS

PROJECT NO. BR-0046
SAMPSON COUNTY
STATION: 24+30.00 -L-

STATE OF NORTH CAROLINA
DEPARTMENT OF TRANSPORTATION
RALEIGH

SUPERSTRUCTURE

CONCRETE BARRIER RAIL

NORTH CAROLINA PROFESSIONAL SEAL 26445 ENGINEER P. KOREY NEWTON

DocuSigned by: P. Korey Newton
4FFE39D143318407...
10/09/2023

DOCUMENT NOT CONSIDERED FINAL UNLESS ALL SIGNATURES COMPLETED

REVISIONS								SHEET NO.
NO.	BY:	DATE:	NO.	BY:	DATE:			S-17
1			3					TOTAL SHEETS
2			4					31

DESIGN ENGINEER OF RECORD : P. D. BRYANT	DATE : 8/29/23	
ASSEMBLED BY : P. K. NEWTON CHECKED BY : P. D. BRYANT	DATE : 2/6/23 DATE : 8/29/23	
DRAWN BY : ARB 5/87 CHECKED BY : SJD 9/87	REV. 7/12 REV. 6/13 REV. 12/17	MAA / GM MAA / GM MAA / THC

10/9/2023
R:\Structures\Plans\401_035_BR-0046_SMU_CBR_S-17_810022.dgn
pknewton

STD. NO. CBR1 (SHT 1)