PREPARED BY:
Kimley»Horn ©2020
421 FAYETTEVILLE STREET, SUITE 600
RALEIGH, NC 27601

PROJECT REFERENCE NO.	SHEET NO.
U-5873	UC-3F
DESIGNED BY: MAS	
DRAWN BY: SJJ	
CHECKED BY: DCS	
APPROVED BY:	
REVISED:	
NORTH CAROLINA DEPARTMENT OF TRANSPORTATION	
UTILITIES ENGINEERING SEC. PHONE:(919)707-6690 FAX:(919)250-4151	UTILITY CONSTRUCTION PLANS ONLY

NORTH CAROLINA PROFESSIONAL SEAL 022670 ENGINEER MATTHEW A. SHOSMITH
Docusigned by: Matthew A. Shosmith
8/25/2023

UTILITY CONSTRUCTION

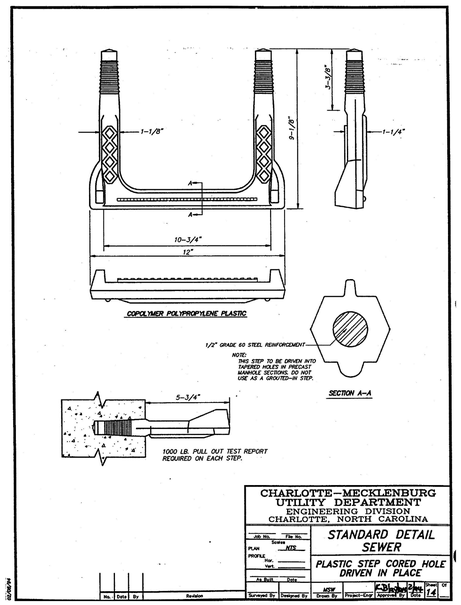

July 27, 1995 XV-70 Sewer Specifications/Details (SD)

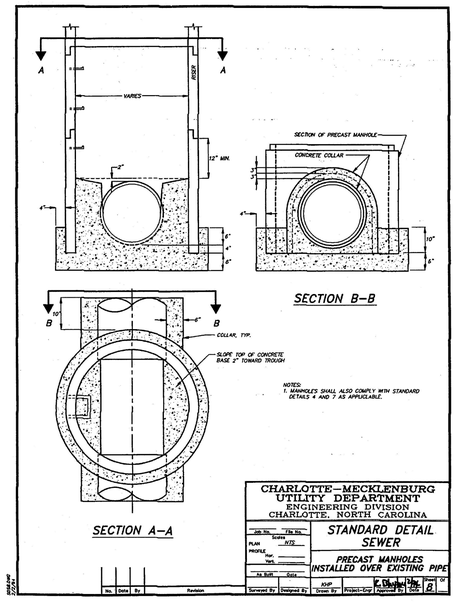

July 27, 1995 XV-64 Sewer Specifications/Details (SD)

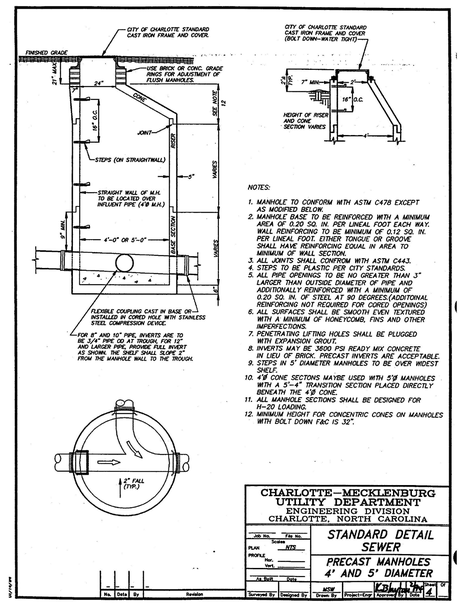

July 27, 1995 XV-60 Sewer Specifications/Details (SD)

50 25 0 50 100