5/14/99

U.S. FOUNDRY & MFG. CORP.

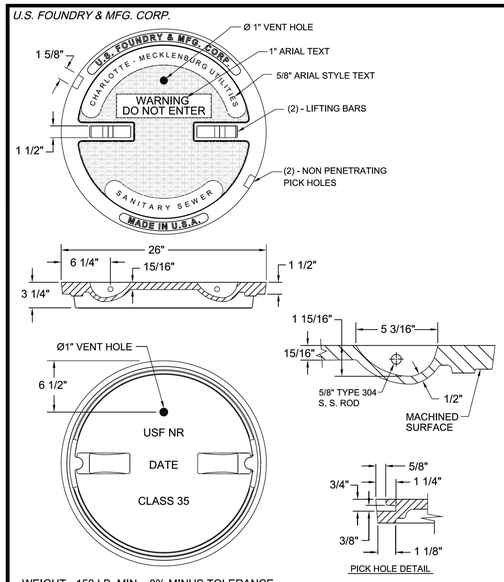

WEIGHT - 150 LB. MIN. , 0% MINUS TOLERANCE

EAST JORDAN IRON WORKS

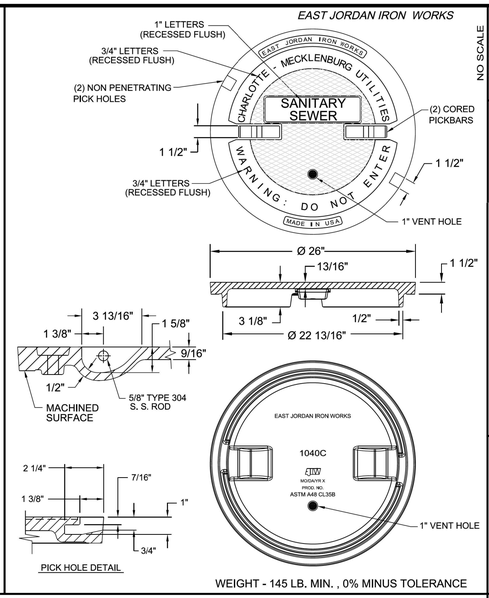

WEIGHT - 145 LB. MIN. , 0% MINUS TOLERANCE

NOTES:

LOAD RATING - HEAVY DUTY
MATERIAL - ASTM A48 - CLASS 35 GRAY IRON
COATING - UNDIPPED

USE WITH TYPE A, B, OR C FRAME
COVER SHALL CONFORM TO DIMENSION AND WEIGHT REQUIREMENTS.
COVER SHALL NOT BE OUT OF ROUND.

NO SCALE
STANDARD NO. A
VERSION NO. V1.2
REVISION DATE 9.23.2009

TYPE 1 MANHOLE COVER
24-INCHES DIAMETER (CLEAR OPENING)
VENTED - ONE VENT HOLE, NO GASKET, NO CAM LOCK

CHARLOTTE-MECKLENBURG UTILITIES
STANDARD DETAILS
GRAVITY SEWER
CHARLOTTE

U.S. FOUNDRY & MFG. CORP.

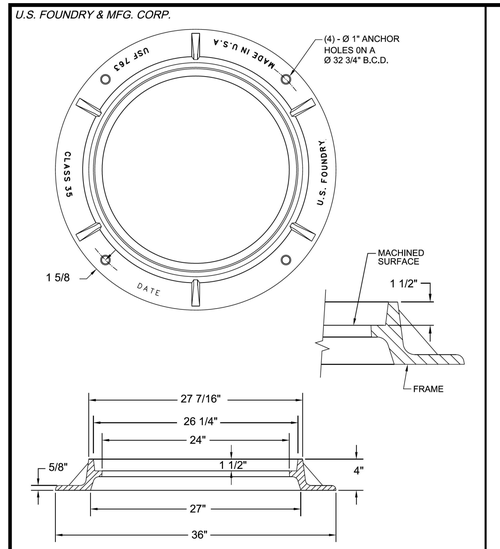

WEIGHT - 155 LB. MIN. , 0% MINUS TOLERANCE

EAST JORDAN IRON WORKS

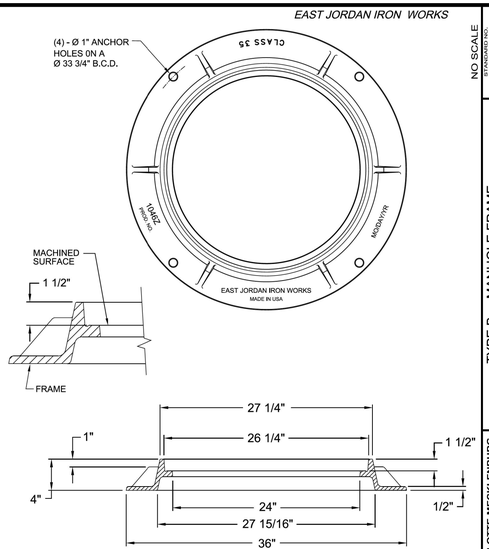

WEIGHT - 135 LB. MIN. , 0% MINUS TOLERANCE

NOTES:

LOAD RATING - HEAVY DUTY
MATERIAL - ASTM A48 - CLASS 35 GRAY IRON
COATING - UNDIPPED

USE WITH TYPE 1, 2, OR 3 COVER
FRAME SHALL CONFORM TO DIMENSION AND WEIGHT REQUIREMENTS.
FRAME SHALL NOT BE OUT OF ROUND.

NO SCALE
STANDARD NO. G
VERSION NO. V1.1
REVISION DATE 8.18.2009

TYPE B MANHOLE FRAME
24-INCHES DIAMETER (CLEAR OPENING)
4-INCHES TALL

CHARLOTTE-MECKLENBURG UTILITIES
STANDARD DETAILS
GRAVITY SEWER
CHARLOTTE

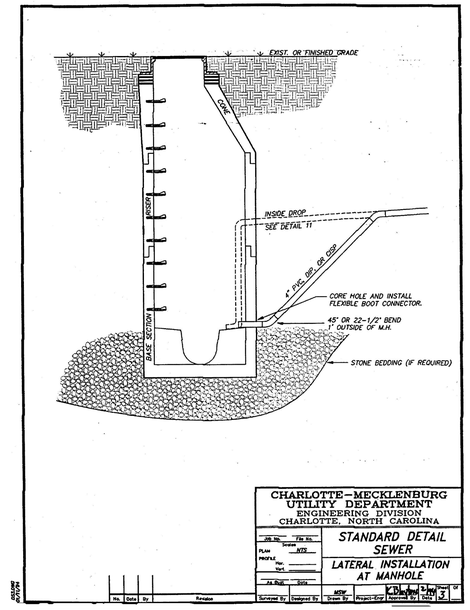

CHARLOTTE-MECKLENBURG UTILITY DEPARTMENT
ENGINEERING DIVISION
CHARLOTTE, NORTH CAROLINA

STANDARD DETAIL SEWER
LATERAL INSTALLATION AT MANHOLE

July 27, 1995 XV-59 Sewer Specifications/Details (SD)

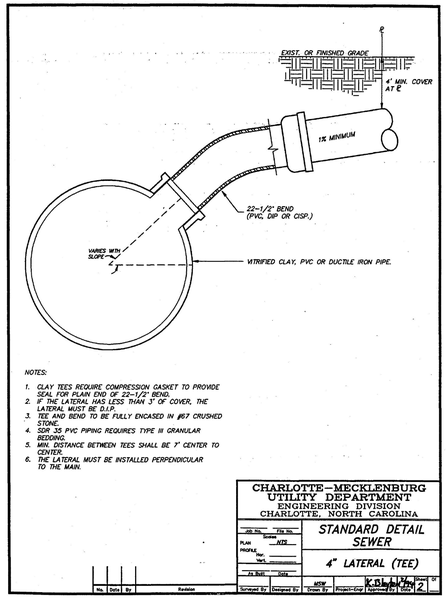

NOTES:

1. CLAY TEES REQUIRE COMPRESSION GASKET TO PROVIDE SEAL FOR PLAIN END OF 22-1/2° BEND.
2. IF THE LATERAL HAS LESS THAN 3' OF COVER, THE LATERAL MUST BE D.I.P.
3. TEE AND BEND TO BE FULLY ENCASED IN #67 CRUSHED STONE.
4. SDR 35 PVC PIPING REQUIRES TYPE III GRANULAR BEDDING.
5. MIN. DISTANCE BETWEEN TEES SHALL BE 7' CENTER TO CENTER.
6. THE LATERAL MUST BE INSTALLED PERPENDICULAR TO THE MAIN.

CHARLOTTE-MECKLENBURG UTILITY DEPARTMENT
ENGINEERING DIVISION
CHARLOTTE, NORTH CAROLINA

STANDARD DETAIL SEWER
4" LATERAL (TEE)

July 27, 1995 XV-58 Sewer Specifications/Details (SD)

PREPARED BY:
Kimley»Horn
421 FAYETTEVILLE STREET, SUITE 600
RALEIGH, NC 27601

PROJECT REFERENCE NO.	SHEET NO.
U-5873	UC-3E

DESIGNED BY: MAS
DRAWN BY: SJJ
CHECKED BY: DCS
APPROVED BY:
REVISED:
NORTH CAROLINA DEPARTMENT OF TRANSPORTATION
UTILITIES ENGINEERING SEC.
PHONE:(919)707-6690
FAX:(919)250-4151

NORTH CAROLINA PROFESSIONAL SEAL 027670 ENGINEER HEW A. SHOSMITH
8/25/2021
UTILITY CONSTRUCTION PLANS ONLY

UTILITY CONSTRUCTION

50 25 0 50 100