PROJ. REFERENCE NO.	SHEET NO.
U-5873 & U-5907	TMP-4

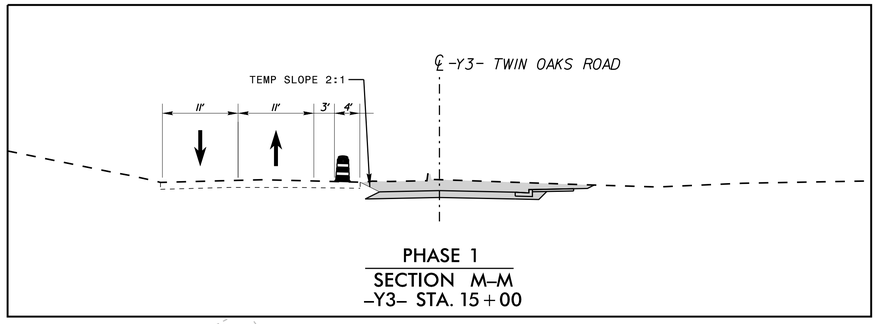

PHASE 1
SECTION M–M
–Y3– STA. 15+00

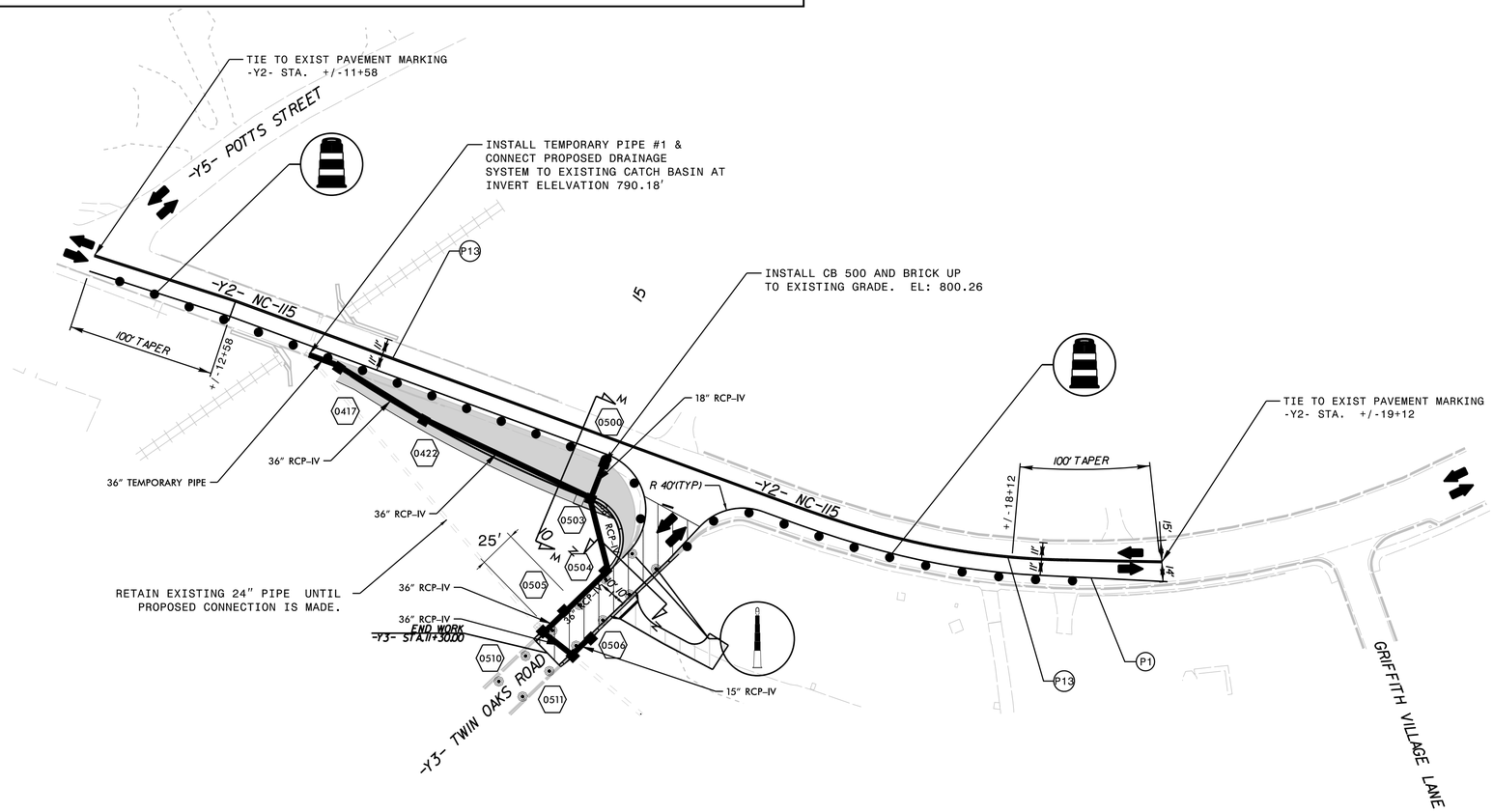

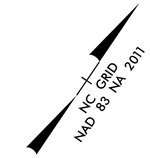

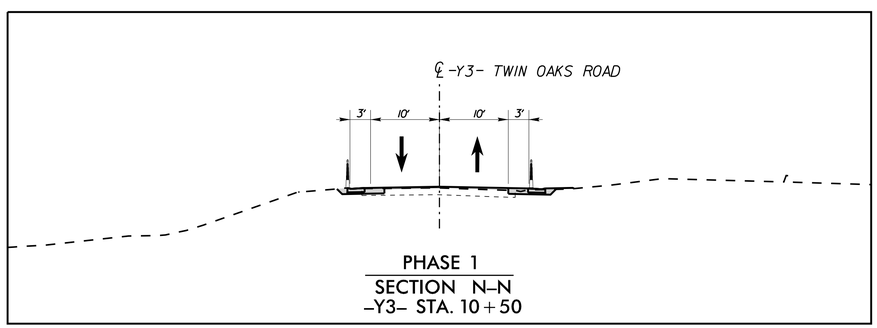

PHASE 1
SECTION N–N
–Y3– STA. 10+50

WEDGING

WORK AREA

Kimley»Horn

APPROVED: Frank Masterson DATE: 10/24/2023

SEAL

NORTH CAROLINA PROFESSIONAL SEAL 037923 ENGINEER FRANK D. MASTERSON, JR.

DIVISION OF HIGHWAYS STATE OF NORTH CAROLINA DEPARTMENT OF TRANSPORTATION WORK ZONE TRAFFIC CONTROL

PHASE 1A TRAFFIC CONTROL DETAILS

K:\CHL_PRJ\011036361_U-5873 Potts-Main\Traffic\TrafficControl\TCP\Sheets\U-5873_rdy_tmp_04.dgn

10/12/2023