DocuSign Envelope ID: 3BE402AC-83F5-4B4B-8D73-FE2CD9BFA1EA

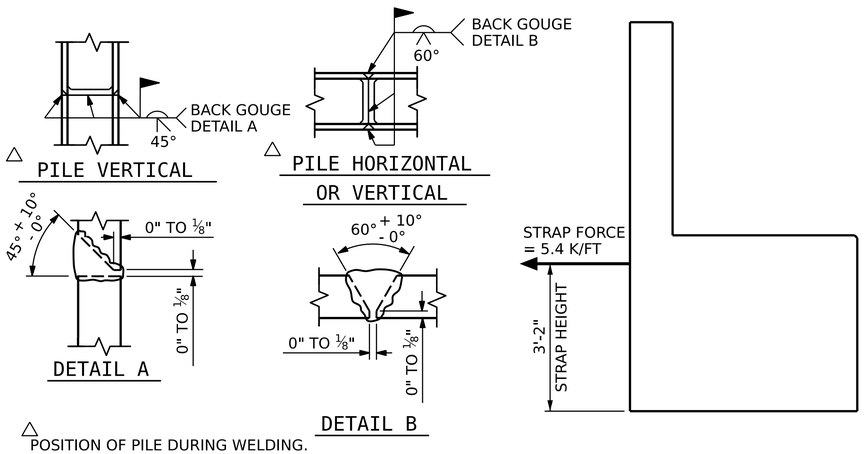

△ POSITION OF PILE DURING WELDING.

PILE SPLICE DETAILS

STRAP FORCE

(SEE MSE WALL PLANS)

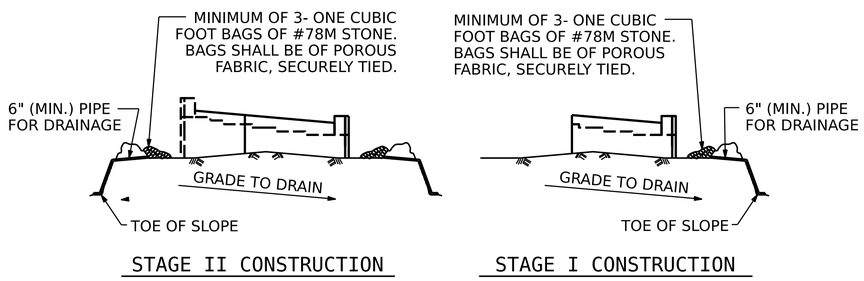

TEMPORARY DRAINAGE AT END BENT

BAGGED STONE AND PIPE SHALL BE PLACED IMMEDIATELY AFTER COMPLETION OF END BENT EXCAVATION. PIPE MAY BE EITHER CONCRETE, CORRUGATED STEEL, CORRUGATED ALUMINUM ALLOY, OR CORRUGATED PLASTIC. PERFORATED PIPE WILL NOT BE ALLOWED.

BAGGED STONE SHALL REMAIN IN PLACE UNTIL THE ENGINEER DIRECTS THAT IT BE REMOVED. THE CONTRACTOR SHALL REMOVE AND DISPOSE OF SILT ACCUMULATIONS AT BAGGED STONE WHEN SO DIRECTED BY THE ENGINEER. BAGS SHALL BE REMOVED AND REPLACED WHENEVER THE ENGINEER DETERMINES THAT THEY HAVE DETERIORATED AND LOST THEIR EFFECTIVENESS.

NO SEPARATE PAYMENT WILL BE MADE FOR THIS WORK AND THE ENTIRE COST OF THIS WORK SHALL BE INCLUDED IN THE UNIT CONTRACT PRICE BID FOR THE SEVERAL PAY ITEMS.

BILL OF MATERIAL

END BENT 2

STAGE I

BAR	NO.	SIZE	TYPE	LENGTH	WEIGHT
B1	6	10	1	34'-8"	895
B2	6	10	STR	33'-3"	858
B3	5	9	1	35'-3"	599
B4	5	9	STR	34'-0"	578
B5	16	5	STR	31'-8"	528
B6	3	10	STR	53'-1"	685
B7	3	10	STR	55'-1"	711
B8	3	9	STR	53'-1"	541
B9	2	9	STR	55'-1"	375
B10	16	5	STR	29'-3"	488
B11	10	4	STR	3'-5"	23
B12	5	4	STR	7'-4"	24
B13	16	4	STR	31'-4"	335
B14	16	4	STR	28'-10"	308
B15	27	4	STR	5'-0"	90
H1	30	5	2	8'-4"	261
K1	20	4	STR	31'-0"	414
K2	20	4	STR	28'-7"	382
K3	5	4	3	16'-5"	55
K4	4	4	STR	7'-8"	20
S1	119	5	4	5'-11"	734
S2	119	5	5	13'-1"	1624
S7	68	4	6	7'-7"	345
U1	90	4	7	4'-2"	251
U2	1	4	7	4'-8"	3
U3	1	4	7	5'-1"	3
U4	2	4	7	5'-6"	7
U5	1	4	7	5'-11"	4
U6	1	4	7	6'-4"	4
U7	1	4	7	6'-8"	4
U8	1	4	7	7'-1"	5
U9	1	4	7	7'-6"	5
U10	1	4	7	7'-11"	5
U11	12	4	7	9'-0"	72
V1	200	5	STR	8'-6"	1773
V2	34	5	STR	10'-2"	361

REINFORCING STEEL 13,370 LBS.

CLASS A CONCRETE

POUR #1 (CAP & LOWER WINGWALL) 89.0 C.Y.

POUR #2 (BACKWALL & UPPER WINGWALL) 25.7 C.Y.

TOTAL = 114.7 C.Y.

STAGE II

BAR	NO.	SIZE	TYPE	LENGTH	WEIGHT
B15	9	4	STR	5'-0"	30
B16	1	10	1	32'-11"	142
B17	1	10	1	30'-9"	132
B18	1	10	1	32'-0"	138
B19	1	10	1	29'-7"	127
B20	1	10	1	30'-10"	133
B21	1	10	1	28'-7"	123
B22	1	9	1	32'-9"	111
B23	1	9	1	30'-3"	103
B24	1	9	1	31'-8"	108
B25	1	9	1	29'-1"	99
B26	1	9	1	30'-5"	103
B27	4	5	STR	23'-4"	97
B28	4	5	STR	29'-11"	125
B29	8	4	STR	30'-0"	160
B30	1	4	STR	32'-3"	22
B31	1	4	STR	31'-9"	21
B32	1	4	STR	31'-2"	21
B33	1	4	STR	30'-6"	20
B34	1	4	STR	29'-11"	20
H2	32	5	3	11'-4"	378
K5	4	4	STR	2'-8"	7
K6	10	4	STR	24'-1"	161
S1	33	5	4	5'-11"	204
S2	33	5	5	13'-1"	450
S3	12	5	7	14'-6"	181
S4	9	5	7	14'-0"	131
S5	24	4	6	7'-7"	122
U1	27	4	7	4'-2"	75
U11	22	4	7	9'-0"	132
U12	5	5	8	15'-11"	83
U13	6	5	8	24'-6"	153
V1	54	5	STR	8'-6"	479
V3	28	5	STR	10'-10"	316

REINFORCING STEEL 4,707 LBS.

CLASS A CONCRETE

POUR #1 (CAP & LOWER WINGWALL) 32.9 C.Y.

POUR #2 (BACKWALL & UPPER WINGWALL) 8.0 C.Y.

TOTAL = 40.9 C.Y.

NOTE: SEE GEOTECHNICAL FOUNDATION TABLES FOR ADDITIONAL PILE INFORMATION

BAR TYPES

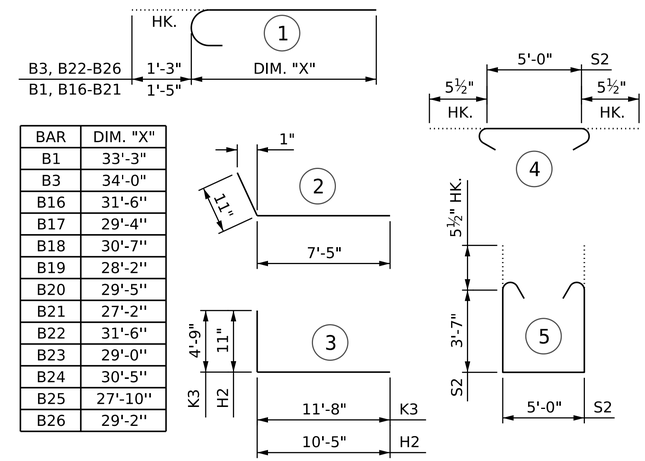

BAR	DIM. "X"
B1	33'-3"
B3	34'-0"
B16	31'-6"
B17	29'-4"
B18	30'-7"
B19	28'-2"
B20	29'-5"
B21	27'-2"
B22	31'-6"
B23	29'-0"
B24	30'-5"
B25	27'-10"
B26	29'-2"

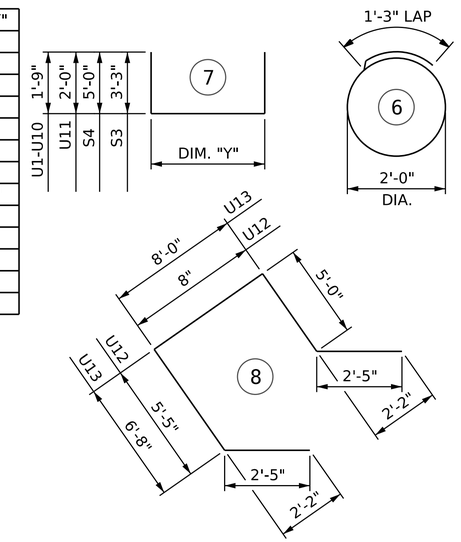

BAR	DIM. "Y"
S3	8'-0"
S4	4'-0"
U1	8"
U2	1'-2"
U3	1'-7"
U4	2'-0"
U5	2'-5"
U6	2'-10"
U7	3'-2"
U8	3'-7"
U9	4'-0"
U10	4'-5"
U11	5'-0"

ALL BAR DIMENSIONS ARE OUT TO OUT.

PROJECT NO. B-3186 / B-5898

HAYWOOD COUNTY

STATION: 32+21.34 -L_LT-

SHEET 6 OF 6

AECOM

AECOM TECHNICAL SERVICES OF NC, INC.
5438 WADE PARK BOULEVARD, SUITE 200
RALEIGH, NC 27607
(919) 854-6200 www.aecom.com
AECOM License No. F-0342

NORTH CAROLINA PROFESSIONAL SEAL 047572 ENGINEER DANNERY S. RITACCO

Docu... BF16E9D917... 20/18/2023

STATE OF NORTH CAROLINA
DEPARTMENT OF TRANSPORTATION
RALEIGH

SUBSTRUCTURE

END BENT 2

BILL OF MATERIALS & DETAILS

REVISIONS							SHEET NO.
NO.	BY:	DATE:	NO.	BY:	DATE:		S1-39
1			3				TOTAL SHEETS
2			4				43

DOCUMENT NOT CONSIDERED FINAL UNLESS ALL SIGNATURES COMPLETED

DRAWN BY : D. RITACCO DATE : 04/2023
CHECKED BY : S. NATARAJAN DATE : 04/2023
DESIGN ENGINEER OF RECORD: D. RITACCO DATE : 04/2023

8/21/2023
c:\pwworking\usnc\dms07766\401_077_B-5898-B-3186_SMU_E206_S1-39_430168.dgn
dannerys.ritacco