DocuSign Envelope ID: 31D555FB-4BCC-4830-BFE1-487C32EC3750

PROJECT REFERENCE NO.	SHEET NO.
B-3186/ B-5898	ITS 28

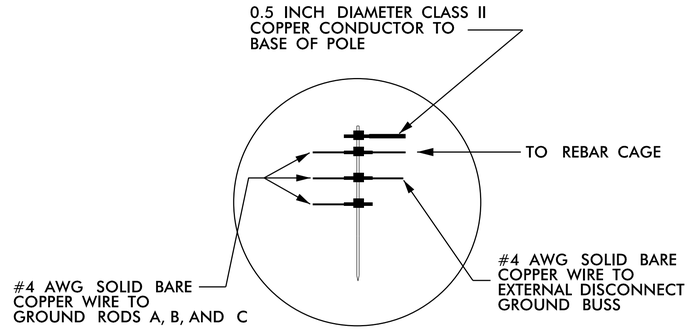

INSET `A'

NOTES

1. BOND 0.5 INCH DIAMETER, 28 STRAND (MINIMUM) CLASS II COPPER CONDUCTOR TO THE MAIN GROUND ROD BY AN IRREVERSIBLE MECHANICAL CRIMP METHOD.
2. ALL CONNECTIONS TO GROUND RODS SHOULD BE MADE WITH AN IRREVERSIBLE MECHANICAL CRIMP METHOD.
3. BOND #4 AWG SOLID BARE COPPER WIRE TO REBAR CAGE AND THE MAIN GROUND ROD BY AN IRREVERSIBLE MECHANICAL CRIMP.
4. ENSURE CAMERA HOUSING, CAMERA, AND PAN –TILT UNIT ARE BONDED TO POLE.
5. REMOVE BONDING JUMPER BETWEEN EQUIPMENT CABINET GROUND BUSS AND NEUTRAL BUSS.
6. REFER TO STANDARD DRAWING 1700–2 FOR ALTERNATE GROUND ROD INSTALLATION METHOD AS APPROVED BY THE ENGINEER.
7. INSTALL MARKER TAPE DIRECTLY ABOVE ALL GROUNDING ELECTRODES AND CONDUCTORS AT A DEPTH OF 12 INCHES.

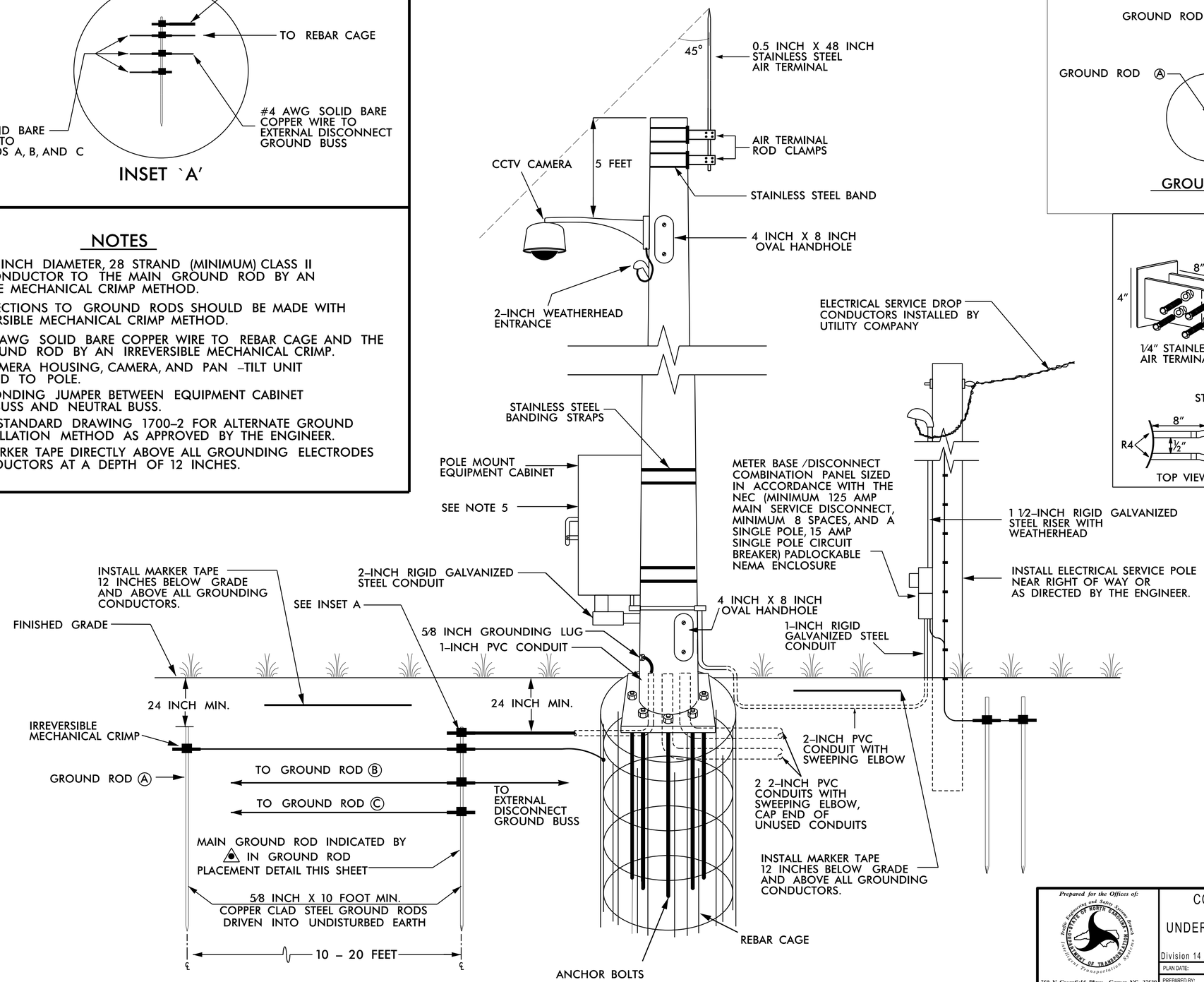

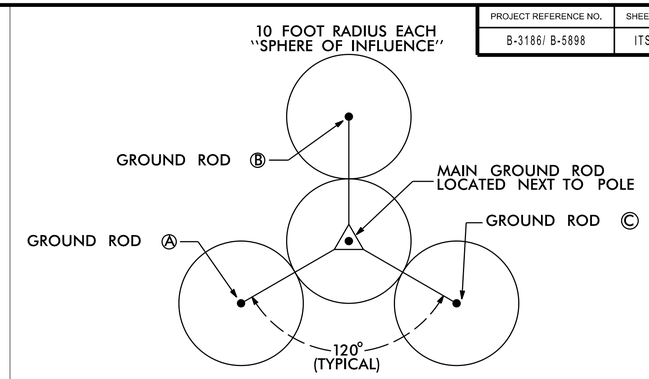

GROUND ROD PLACEMENT DETAIL
(TYPICAL EACH POLE)

AIR TERMINAL ROD CLAMP DETAIL

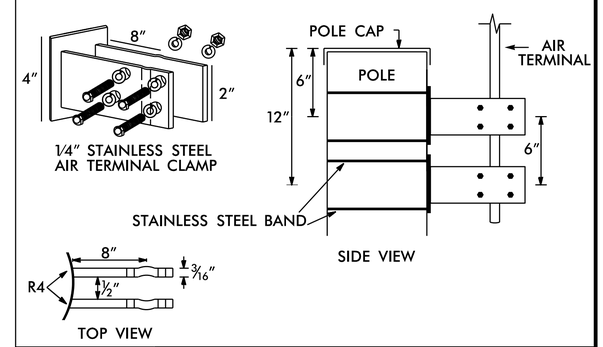

ALTERNATE GROUNDING METHOD

IF SPACE IS NOT AVAILABLE TO DRIVE MULTIPLE RODS, DRIVE SECTIONAL GROUND RODS A MINIMUM OF 30 FEET.

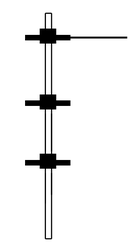

JOIN SECTIONAL GROUND RODS BY IRREVERSIBLE COMPRESSION COUPLER

DOCUMENT NOT CONSIDERED FINAL UNLESS ALL SIGNATURES COMPLETED

Prepared for the Offices of: Traffic Engineering and Safety Systems Branch, Intelligent Transportation Systems, NORTH CAROLINA DEPARTMENT OF TRANSPORTATION
750 N. Greenfield Pkwy., Garner, NC 27529

NTS

CCTV CAMERA INSTALLATION FOR METAL POLE WITH UNDERGROUND ELECTRICAL SERVICE TYPICAL DETAIL

Division 14 | Haywood County | Waynesville

PLAN DATE:	August 2023	REVIEWED BY:	R. Garrett
PREPARED BY:	M. Tindal	REVIEWED BY:	

REVISIONS	INIT.	DATE

SEAL
NORTH CAROLINA PROFESSIONAL SEAL 026679 ENGINEER ROCHELLE GARRETT

DocuSigned by:
Rochelle Garrett 8/4/2023
SIGNATURE DATE

CADD Filename:

8/4/2023
pw://aecom-na-pw.bentley.com:AECOM_USA_North_Carolina\Documents\60670967-1-NCDOT B5898 B3186\900-CAD GIS\910_CAD\70_NCDOT_TIP\Intelligent Transportation Systems\B-5898_ITS_FSH28.dgn
ncdot\jaycom