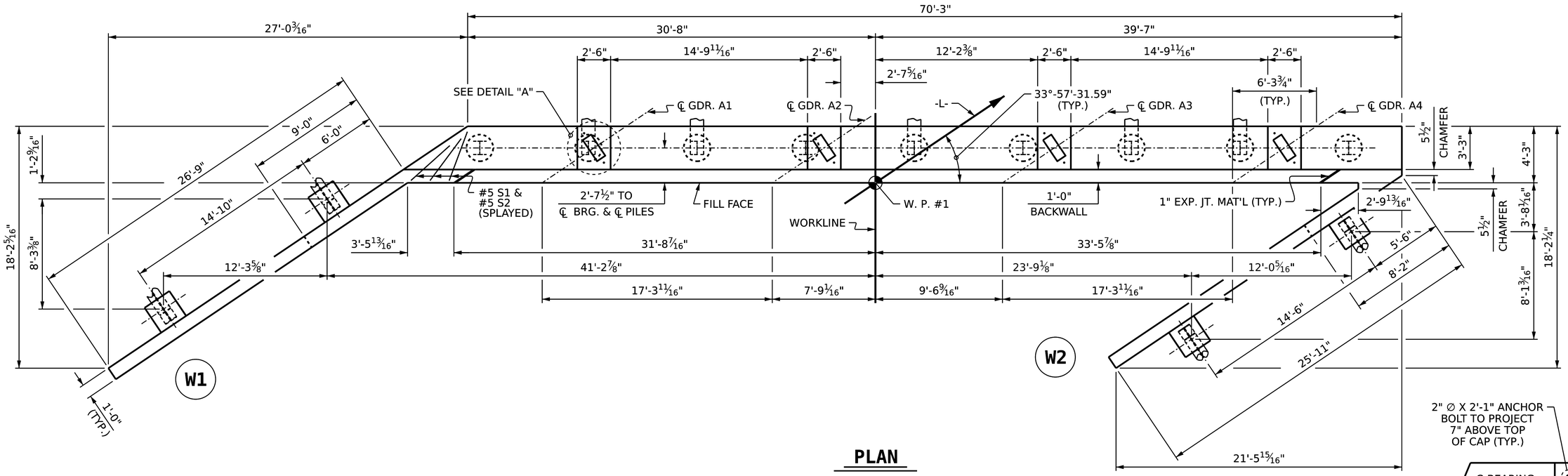

PLAN

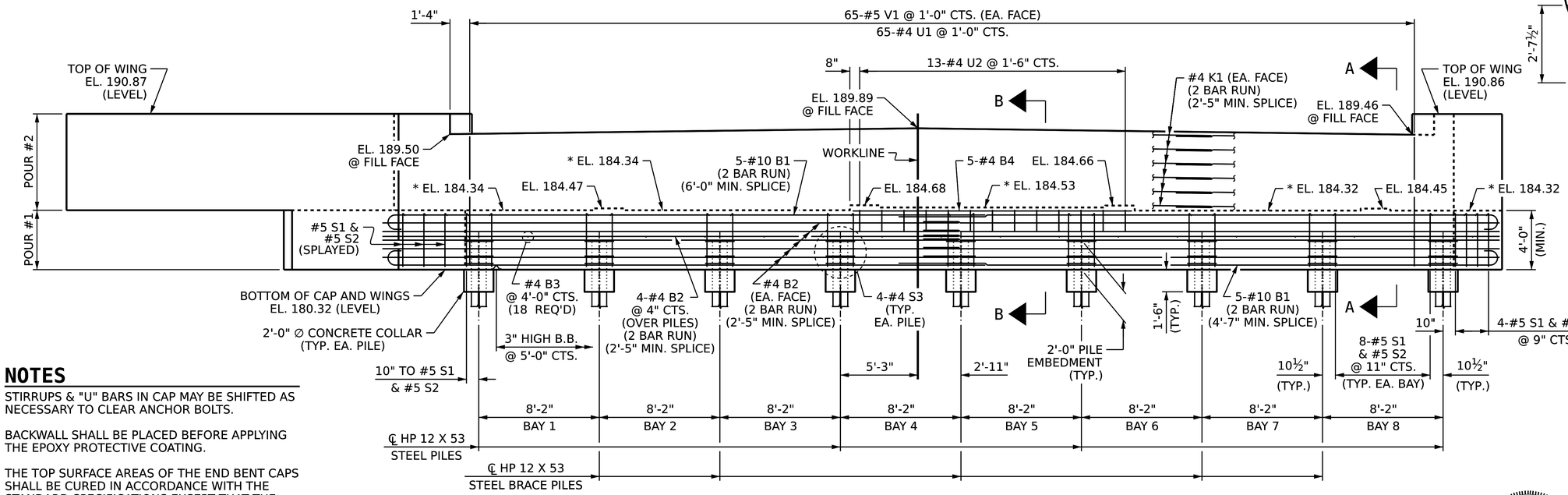

ELEVATION

RIGHT WING NOT SHOWN FOR CLARITY
BRACE PILES IN WINGS NOT SHOWN FOR CLARITY

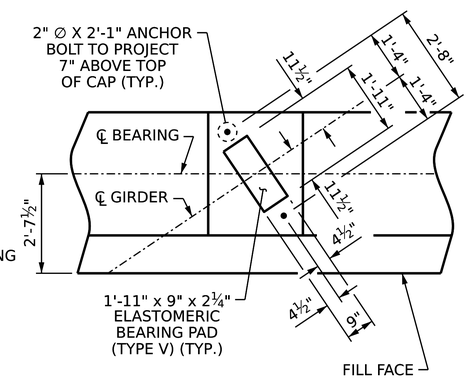

DETAIL "A"

(TYP. EA. GIRDER)

NOTES

STIRRUPS & "U" BARS IN CAP MAY BE SHIFTED AS NECESSARY TO CLEAR ANCHOR BOLTS.

BACKWALL SHALL BE PLACED BEFORE APPLYING THE EPOXY PROTECTIVE COATING.

THE TOP SURFACE AREAS OF THE END BENT CAPS SHALL BE CURED IN ACCORDANCE WITH THE STANDARD SPECIFICATIONS EXCEPT THAT THE MEMBRANE CURING COMPOUND METHOD SHALL NOT BE USED.

* THE TOP SURFACE OF THE END BENT CAP EXCEPT THE BRIDGE SEAT BUILDUPS SHALL BE SLOPED TRANSVERSELY FROM THE FILL FACE TO THE BACK FACE AT THE RATE OF 2%.

PROJECT NO. B-5981
DUPLIN COUNTY
STATION: 23+56.64 -L-

SHEET 1 OF 3

STATE OF NORTH CAROLINA
DEPARTMENT OF TRANSPORTATION
RALEIGH

SUBSTRUCTURE

END BENT 1

NORTH CAROLINA PROFESSIONAL SEAL 023739 ENGINEER PAUL D. BRYANT

DocuSigned by: Paul D. Bryant
71C21940EF294A5...
10/24/2023

DOCUMENT NOT CONSIDERED FINAL UNLESS ALL SIGNATURES COMPLETED

REVISIONS								SHEET NO.
NO.	BY:	DATE:	NO.	BY:	DATE:			S1-30
1			3					TOTAL SHEETS
2			4					43

DRAWN BY :	P. K. NEWTON	DATE :	1/14/23
CHECKED BY :	D. R. SHACKELFORD	DATE :	1/31/23
DESIGN ENGINEER OF RECORD:	P. D. BRYANT	DATE :	2/6/23

10/24/2023
R:\Structures\Plans\300016\401_059_B5981_SMU_EB1_S1-30_300016.dgn
ssandor