TIP PROJECT: R-5861

CONTRACT: C204887

09/08/99

10/30/2023
R:\Roadway\Proj\R5861_Rdy_tsh.dgn
default

See Sheet 1A For Index of Sheets
See Sheet 1B For Conventional Symbols

STATE OF NORTH CAROLINA
DIVISION OF HIGHWAYS

CHEROKEE COUNTY

STATE	STATE PROJECT REFERENCE NO.	SHEET NO.	TOTAL SHEETS
N.C.	R–5861	1	

STATE PROJ. NO.	F. A. PROJ. NO.	DESCRIPTION
47427.1.2		PE
47427.2.1		R/W
47427.2.2		UTILITIES
47427.3.1	4742701	CONSTRUCTION

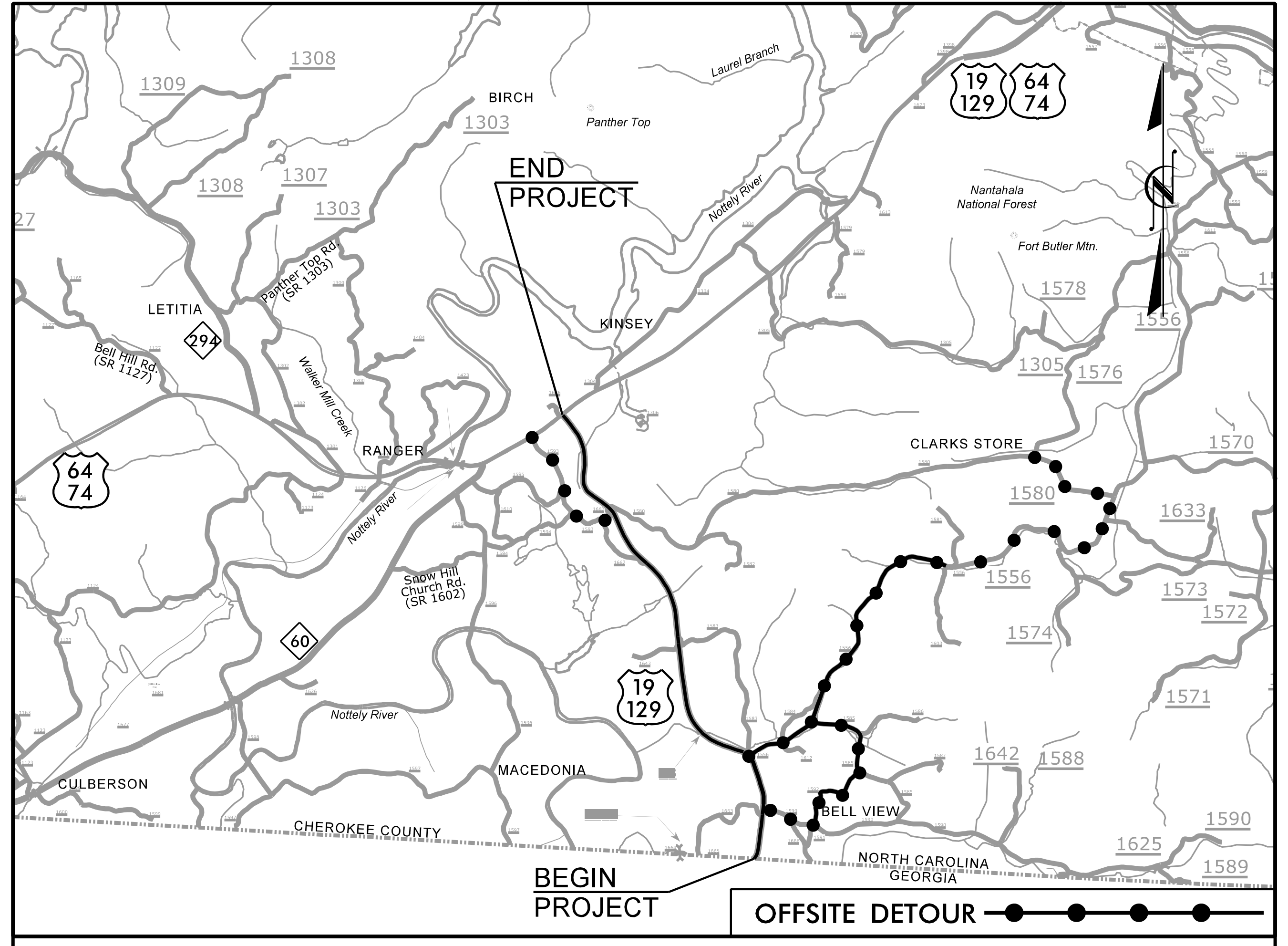

END PROJECT
BEGIN PROJECT
OFFSITE DETOUR
BIRCH
Panther Top
KINSEY
LETITIA
RANGER
CULBERSON
MACEDONIA
BELL VIEW
CLARKS STORE
Nantahala National Forest
Fort Butler Mtn.
CHEROKEE COUNTY
NORTH CAROLINA
GEORGIA
19 129
64 74
294
60
1309
1308
1303
1307
1578
1556
1305
1576
1570
1580
1633
1573
1572
1574
1571
1642
1588
1590
1625
1589

VICINITY MAP (NTS)

LOCATION: WIDENING US 19 /129 FROM THE GEORGIA STATE LINE TO US 64 /74.

TYPE OF WORK: DRAINAGE, GRADING, PAVING, SIGNALS, & STRUCTURES

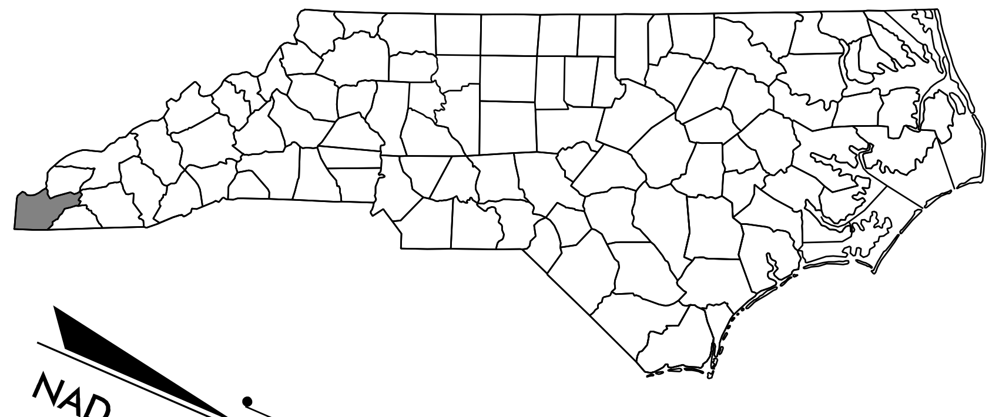

NAD 83/2011

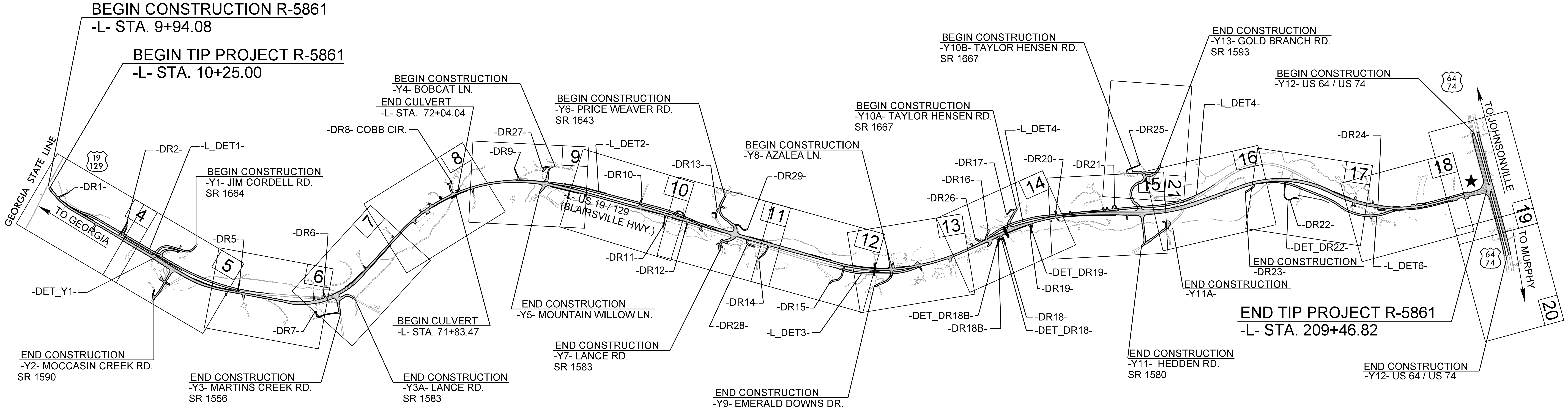

BEGIN CONSTRUCTION R-5861
-L- STA. 9+94.08
BEGIN TIP PROJECT R-5861
-L- STA. 10+25.00
GEORGIA STATE LINE
TO GEORGIA
-DR1-
-DR2-
-L_DET1-
BEGIN CONSTRUCTION
-Y1- JIM CORDELL RD.
SR 1664
-DET_Y1-
END CONSTRUCTION
-Y2- MOCCASIN CREEK RD.
SR 1590
-DR5-
-DR6-
-DR7-
END CONSTRUCTION
-Y3- MARTINS CREEK RD.
SR 1556
BEGIN CONSTRUCTION
-Y4- BOBCAT LN.
END CULVERT
-L- STA. 72+04.04
-DR8- COBB CIR.
BEGIN CULVERT
-L- STA. 71+83.47
END CONSTRUCTION
-Y3A- LANCE RD.
SR 1583
-DR27-
-DR9-
BEGIN CONSTRUCTION
-Y6- PRICE WEAVER RD.
SR 1643
-L_DET2-
-DR10-
-L- US 19 / 129
(BLAIRSVILLE HWY.)
-DR11-
-DR12-
-DR13-
END CONSTRUCTION
-Y5- MOUNTAIN WILLOW LN.
END CONSTRUCTION
-Y7- LANCE RD.
SR 1583
BEGIN CONSTRUCTION
-Y8- AZALEA LN.
-DR29-
-DR14-
-DR28-
-DR15-
-L_DET3-
END CONSTRUCTION
-Y9- EMERALD DOWNS DR.
BEGIN CONSTRUCTION
-Y10A- TAYLOR HENSEN RD.
SR 1667
BEGIN CONSTRUCTION
-Y10B- TAYLOR HENSEN RD.
SR 1667
-L_DET4-
-DR17-
-DR16-
-DR26-
-DR20-
-DR21-
-DET_DR18B-
-DR18B-
-DR18-
-DET_DR18-
-DET_DR19-
-DR19-
-DR25-
END CONSTRUCTION
-Y13- GOLD BRANCH RD.
SR 1593
-L_DET4-
END CONSTRUCTION
-Y11A-
END CONSTRUCTION
-Y11- HEDDEN RD.
SR 1580
-DR22-
-DET_DR22-
END CONSTRUCTION
-DR23-
-DR24-
-L_DET6-
BEGIN CONSTRUCTION
-Y12- US 64 / US 74
TO JOHNSONVILLE
TO MURPHY
END TIP PROJECT R-5861
-L- STA. 209+46.82
END CONSTRUCTION
-Y12- US 64 / US 74
19 129
64 74
4
5
6
7
8
9
10
11
12
13
14
15
16
17
18
19
20
21

★ SIGNAL UPGRADE

DOCUMENT NOT CONSIDERED FINAL UNLESS ALL SIGNATURES COMPLETED

GRAPHIC SCALES

50 25 0 50 100
PLANS

50 25 0 50 100
PROFILE (HORIZONTAL)

10 5 0 10 20
PROFILE (VERTICAL)

DESIGN DATA

ADT 2023 = 9,477
ADT 2043 = 11,103
V = 60 MPH
DHV = 8%
D = 55%
T = 4% *
(* TTST = 2% /* DUAL = 2%)
FUNC CLASS = RURAL ARTERIAL
REGIONAL TIER

PROJECT LENGTH

LENGTH ROADWAY TIP PROJECT R–5861............3.769 miles
LENGTH STRUCTURE TIP PROJECT R–5861...........0.004 miles
TOTAL LENGTH OF PROJECT R–5861...................3.773 miles

PLANS PREPARED BY:

RK&K

8601 SIX FORKS ROAD, FORUM 1, SUITE 700
RALEIGH, NORTH CAROLINA 27615
NC LICENSE NO. F-0112
1-888-521-4455 OR 919-878-9560

FOR NORTH CAROLINA DEPARTMENT OF TRANSPORTATION

2018 STANDARD SPECIFICATIONS

RIGHT OF WAY DATE:
JULY 20, 2021

LETTING DATE:
DECEMBER 19, 2023

Brandon McInnis, P.E.
PROJECT ENGINEER

Jillian Hinson, E.I.
PROJECT DESIGN ENGINEER

NCDOT CONTACT: Kenneth J. McDowell
DIVISION 14

HYDRAULICS ENGINEER

SEAL 46155
ALEXIS S. BURKE

DocuSigned by:
Alexis Burke
SIGNATURE: P.E. 10/30/2023

ROADWAY DESIGN ENGINEER

SEAL 29470
BRANDON J. McINNIS

DocuSigned by:
Brandon McInnis
SIGNATURE: P.E. 10/31/2023

PROJECT REFERENCE NO.	SHEET NO.
R-5861	1A
R/W SHEET NO.	

ROADWAY DESIGN ENGINEER

DocuSigned by:
Brandon McInnis
BE6912CC24204D4...

SEAL 29470
BRANDON J. McINNIS
10/31/2023

DOCUMENT NOT CONSIDERED FINAL
UNLESS ALL SIGNATURES COMPLETED

INDEX OF SHEETS

SHEET NUMBER	SHEET
1	TITLE SHEET
1A	INDEX OF SHEETS, GENERAL NOTES, AND STANDARD DRAWINGS
1B	CONVENTIONAL SYMBOLS
2A-1 THRU 2A-7	PAVEMENT SCHEDULE AND TYPICAL SECTIONS
2B-1 THRU 2B-10	ROADWAY DETOUR SHEETS
2C-1 THRU 2C-3	GUARDRAIL DETAILS
2C-4 THRU 2C-7	DRAINAGE DETAILS
2C-8	CHAIN LINK FENCE ON RETAINING WALL DETAIL
2C-9	EXTRA DEPTH CATCH BASIN
2C-10	OPEN THROAT CATCH BASIN (3 OR 4 SIDED)
2C-11	CONVERT EXIST BOX TO OTCB
2C-12	CONVERT EXIST BOX TO JB
2C-13	ROCK PLATING
2D-1 THRU 2D-2	DITCH DETAIL SHEET
2G-1 THRU 2G-6	GEOTECH DETAIL SHEET
3B-1 THRU 3B-2	EARTHWORK SUMMARY
3B-3	CURB AND GUTTER, VINYL COATED FENCE, PAVEMENT REMOVAL, AND PAVEMENT BREAKING SUMMARIES
3B-4	GUARDRAIL SUMMARY
3B-5	TEMPORARY GUARDRAIL SUMMARY
3D-1 THRU 3D-14	DRAINAGE SUMMARY SHEETS
3G-1	GEOTECH SUMMARY SHEET
3P-1	PARCEL INDEX SHEET
4 THRU 21	PLAN SHEETS
22 THRU 43	PROFILE SHEETS
RW01 THRU RW19	RIGHT OF WAY CONTROL SHEETS
TMP-1 THRU TMP-60	TRANSPORTATION MANAGEMENT PLANS
PMP-1 THRU PMP-19	PAVEMENT MARKING PLANS
EC-1 THRU EC-39	EROSION CONTROL PLANS
SIGN-1 THRU SIGN-17	SIGNING PLANS
SIG.-1.0 THRU SIG.-3.1	SIGNAL PLANS
SIG. M1 THRU SIG. M8	METAL STRAIN POLE PLANS
UC-1 THRU UC-9	UTILITY CONSTRUCTION PLANS
UO-1 THRU UO-19	UTILITIES BY OTHERS PLANS
X-0	CROSS-SECTION INDEX
X-1A THRU X-1G	CROSS SECTION SUMMARY SHEETS
X-1 THRU X-466	CROSS-SECTIONS
W-1 THRU W-3	WALL PLANS
S-1 THRU S-6	HEADWALL PLANS
CU_4-1 THRU CU_4-8	CULVERT PLANS 4
CU_6-1 THRU CU_6-15	CULVERT PLANS 6

EFF. 01-16-2018
REV.

2018 ROADWAY ENGLISH STANDARD DRAWINGS

The following Roadway Standards as appear in "Roadway Standard Drawings" Highway Design Branch - N. C. Department of Transportation - Raleigh, N. C., Dated January, 2018 are applicable to this project and by reference hereby are considered a part of these plans:

STD.NO.	TITLE
DIVISION 2 - EARTHWORK	
200.02	Method of Clearing - Method II
225.02	Guide for Grading Subgrade - Secondary and Local
225.04	Method of Obtaining Superelevation - Two Lane Pavement
225.06	Method of Grading Sight Distance at Intersections
240.01	Guide for Berm Ditch Construction
DIVISION 3 - PIPE CULVERTS	
300.01	Method of Pipe Installation
310.02	Parallel Pipe End Section - Precast Concrete Section for 15" to 24" Pipe
310.10	Driveway Pipe Construction
DIVISION 5 - SUBGRADE, BASES AND SHOULDERS	
560.01	Method of Shoulder Construction - High Side of Superelevated Curve - Method I
DIVISION 6 - ASPHALT BASES AND PAVEMENTS	
654.01	Pavement Repairs
DIVISION 8 - INCIDENTALS	
815.02	Subsurface Drain
815.03	Pipe Underdrain and Blind Drain
838.01	Concrete Endwall for Single and Double Pipe Culverts - 15" thru 48" Pipe 90 Skew
838.11	Brick Endwall for Single and Double Pipe Culverts - 15" thru 48" Pipe 90 Skew
838.21	Reinforced Concrete Endwall - for Single 54" Pipe 90 Skew
838.27	Reinforced Concrete Endwall - for Single 60" Pipe 90 Skew
838.33	Reinforced Concrete Endwall - for Single 66" Pipe 90 Skew
838.39	Reinforced Concrete Endwall - for Single 72" Pipe 90 Skew
838.45	Notes for Reinforced Concrete Endwall - Std. Dwg 838.21 thru 838.40
838.51	Reinforced Brick Endwall - for Single 54" Pipe 90 Skew
838.57	Reinforced Brick Endwall - for Single 60" Pipe 90 Skew
838.63	Reinforced Brick Endwall - for Single 66" Pipe 90 Skew
838.69	Reinforced Brick Endwall - for Single 72" Pipe 90 Skew
838.75	Notes for Reinforced Brick Endwall - Std. Dwg 838.51 thru 838.70
838.80	Precast Endwalls - 12" thru 72" Pipe 90 Skew
840.00	Concrete Base Pad for Drainage Structures
840.01	Brick Catch Basin - 12" thru 54" Pipe
840.02	Concrete Catch Basin - 12" thru 54" Pipe
840.03	Frame, Grates and Hood - for Use on Standard Catch Basin
840.14	Concrete Drop Inlet - 12" thru 30" Pipe
840.15	Brick Drop Inlet - 12" thru 30" Pipe
840.16	Drop Inlet Frame and Grates - for use with Std. Dwg 840.14 and 840.15
840.17	Concrete Grated Drop Inlet Type 'A' - 12" thru 72" Pipe
840.18	Concrete Grated Drop Inlet Type 'B' - 12" thru 36" Pipe
840.19	Concrete Grated Drop Inlet Type 'D' - 12" thru 36" Pipe
840.24	Frames and Narrow Slot Sag Grates
840.25	Anchorage for Frames - Brick or Concrete or Precast
840.26	Brick Grated Drop Inlet Type 'A' - 12" thru 72" Pipe
840.27	Brick Grated Drop Inlet Type 'B' - 12" thru 36" Pipe
840.28	Brick Grated Drop Inlet Type 'D' - 12" thru 36" Pipe
840.29	Frames and Narrow Slot Flat Grates
840.31	Concrete Junction Box - 12" thru 66" Pipe
840.32	Brick Junction Box - 12" thru 66" Pipe
840.34	Traffic Bearing Junction Box - for Use with Pipes 42" and Under
840.35	Traffic Bearing Grated Drop Inlet - for Cast Iron Double Frame and Grates
840.45	Precast Drainage Structure
840.46	Traffic Bearing Precast Drainage Structure
840.54	Manhole Frame and Cover
840.66	Drainage Structure Steps
840.71	Concrete and Brick Pipe Plug
840.72	Pipe Collar
846.01	Concrete Curb, Gutter and Curb & Gutter
846.02	Drop Inlet Installation in Expressway Gutter
846.04	Drop Inlet Installation in Shoulder Berm Gutter
848.04	Street Turnout
850.01	Concrete Paved Ditches
850.10	Guide for Berm Drainage Outlet - 15" and 18" Pipe
850.11	Guide for Berm Drainage Outlet - 24" and 30" Pipe
852.01	Concrete Islands
852.06	Method for Placement of Drop Inlets in Concrete Islands
857.01	Precast Reinforced Concrete Barrier - 41" Single Faced
862.01	Guardrail Placement
862.02	Guardrail Installation
862.04	Anchoring End of Guardrail - B-77 and B-83 Anchor Units
866.01	Chain Link Fence - 4', 5' and 6' High Fence
876.01	Rip Rap in Channels
876.02	Guide for Rip Rap at Pipe Outlets
876.04	Drainage Ditches with Class 'B' Rip Rap

GENERAL NOTES:

2018 SPECIFICATIONS
EFFECTIVE: 01-16-2018
REVISED:

GRADING AND SURFACING OR RESURFACING AND WIDENING:

THE GRADE LINES SHOWN DENOTE THE FINISHED ELEVATION OF THE PROPOSED SURFACING AT GRADE POINTS SHOWN ON THE TYPICAL SECTIONS. WHERE NO GRADE LINES ARE SHOWN, THE PROFILES SHOWN DENOTE THE TOP ELEVATION OF THE EXISTING PAVEMENT ALONG THE CENTER LINE OF SURVEY ON WHICH THE PROPOSED RESURFACING WILL BE PLACED. GRADE LINES MAY BE ADJUSTED BY THE ENGINEER IN ORDER TO SECURE A PROPER TIE-IN.

CLEARING:

CLEARING ON THIS PROJECT SHALL BE PERFORMED TO THE LIMITS ESTABLISHED BY METHOD II.

SUPERELEVATION:

ALL CURVES ON THIS PROJECT SHALL BE SUPERELEVATED IN ACCORDANCE WITH STD. NO. 225.04 USING THE RATE OF SUPERELEVATION AND RUNOFF SHOWN ON THE PLANS. SUPERELEVATION IS TO BE REVOLVED ABOUT THE GRADE POINTS SHOWN ON THE TYPICAL SECTIONS.

SHOULDER CONSTRUCTION:

ASPHALT, EARTH, AND CONCRETE SHOULDER CONSTRUCTION ON THE HIGH SIDE OF SUPERELEVATED CURVES SHALL BE IN ACCORDANCE WITH STD. NO. 560.01

SIDE ROADS:

THE CONTRACTOR WILL BE REQUIRED TO DO ALL NECESSARY WORK TO PROVIDE SUITABLE CONNECTIONS WITH ALL ROADS, STREETS, AND DRIVES ENTERING THIS PROJECT. THIS WORK WILL BE PAID FOR AT THE CONTRACT UNIT PRICE FOR THE PARTICULAR ITEMS INVOLVED.

BERM DITCHES:

BERM DITCHES SHALL BE CONSTRUCTED IN ACCORDANCE WITH STD. NO. 240.01 AT LOCATIONS SHOWN ON THE PLANS OR AS DIRECTED BY THE ENGINEER.

SUBSURFACE DRAINS:

SUBSURFACE DRAINS SHALL BE CONSTRUCTED IN ACCORDANCE WITH STD. NO. 815.02 AT LOCATIONS DIRECTED BY THE ENGINEER.

UNDERDRAINS:

UNDERDRAINS SHALL BE CONSTRUCTED IN ACCORDANCE WITH STD. NO. 815.03 AT LOCATIONS DIRECTED BY THE ENGINEER.

STREET TURNOUT:

STREET RETURNS SHALL BE CONSTRUCTED IN ACCORDANCE WITH STD. NO. 848.04 USING THE RADII NOTED ON PLANS.

GUARDRAIL:

THE GUARDRAIL LOCATIONS SHOWN ON THE PLANS MAY BE ADJUSTED DURING CONSTRUCTION AS DIRECTED BY THE ENGINEER. THE CONTRACTOR SHOULD CONSULT WITH THE ENGINEER PRIOR TO ORDERING GUARDRAIL MATERIAL.

TEMPORARY SHORING:

SHORING REQUIRED FOR THE MAINTENANCE OF TRAFFIC NOT SHOWN ON THE PLANS WILL BE PAID FOR AT THE CONTRACT PRICE FOR "TEMPORARY SHORING".

UTILITIES:

UTILITY OWNERS ON THIS PROJECT ARE BLUE RIDGE MOUNTAIN EMC,

TVA TRANSMISSION, FRONTIER COMMUNICATIONS, BALSAM WEST COMMUNICATIONS,

MURPHY CABLE, AND TOWN OF MURPHY

ANY RELOCATION OF EXISTING UTILITIES WILL BE ACCOMPLISHED BY OTHERS.

RIGHT-OF-WAY MARKERS:

ALL RIGHT-OF-WAY MARKERS ON THIS PROJECT SHALL BE PLACED BY OTHERS.

ROCK

ROCK IS ANTICIPATED BETWEEN THE STATIONS BELOW. BLASTING MAY BE REQUIRED FOR EXCAVATION ON THE PROJECT. SEE SECTION 220 OF THE STANDARD SPECIFICATIONS AND IF APPLICABLE, ROCK BLASTING PROVISION.

RK&K
P: (919) 878-9560
8601 Six Forks Road, Forum 1,Suite 700
Raleigh, North Carolina 27615-3960
NC License No. F-0112
Engineers | Construction Managers | Planners | Scientists
www.rkk.com
Responsive People | Creative Solutions

9/10/2021

PROJECT REFERENCE NO.	SHEET NO.
R-5861	1B

STATE OF NORTH CAROLINA, DIVISION OF HIGHWAYS

CONVENTIONAL PLAN SHEET SYMBOLS

Note: Not to Scale

BOUNDARIES AND PROPERTY:

State Line	——·——··
County Line	—·—·—
Township Line	—··—··
City Line	— — —
Reservation Line	— · — · —
Property Line	—— ——
Existing Iron Pin (EIP)	○ EIP
Computed Property Corner	×
Existing Concrete Monument (ECM)	□ ECM
Parcel/Sequence Number	⑫③ (123)
Existing Fence Line	—×—×—×
Proposed Woven Wire Fence	—○—○—
Proposed Chain Link Fence	—□—□—
Proposed Barbed Wire Fence	—◇—◇—
Existing Wetland Boundary	— — WLB — —
Proposed Wetland Boundary	—— WLB ——
Existing Endangered Animal Boundary	—— EAB ——
Existing Endangered Plant Boundary	—— EPB ——
Existing Historic Property Boundary	—— HPB ——
Known Contamination Area: Soil	☠ S ☠ S
Potential Contamination Area: Soil	☠ S ☠ S
Known Contamination Area: Water	☠ W ☠ W
Potential Contamination Area: Water	☠ W ☠ W
Contaminated Site: Known or Potential	☠ ?

BUILDINGS AND OTHER CULTURE:

Gas Pump Vent or U/G Tank Cap	○
Sign	○ S
Well	○ W
Small Mine	⚒
Foundation	▭
Area Outline	▭
Cemetery	†
Building	▭
School	⚑
Church	✝
Dam	———

HYDROLOGY:

Stream or Body of Water	— — —
Hydro, Pool or Reservoir	[— — —]
Jurisdictional Stream	—— JS ——
Buffer Zone 1	—— BZ 1 ——
Buffer Zone 2	—— BZ 2 ——
Flow Arrow	←
Disappearing Stream	>—
Spring	○~
Wetland	⊻
Proposed Lateral, Tail, Head Ditch	⋙ ← FLOW
False Sump	◁▷

RAILROADS:

Standard Gauge	┼┼┼┼ CSX TRANSPORTATION
RR Signal Milepost	⊙ MILEPOST 35
Switch	□ SWITCH
RR Abandoned	—+— —+—
RR Dismantled	— — — —

RIGHT OF WAY & PROJECT CONTROL:

Primary Horiz Control Point	⬡
Primary Horiz and Vert Control Point	⬢
Secondary Horiz and Vert Control Point	◆
Vertical Benchmark	⧗
Existing Right of Way Monument	△
Proposed Right of Way Monument (Rebar and Cap)	▲
Proposed Right of Way Monument (Concrete)	⊙▲
Existing Permanent Easement Monument	◇
Proposed Permanent Easement Monument (Rebar and Cap)	◈
Existing C/A Monument	△
Proposed C/A Monument (Rebar and Cap)	▲
Proposed C/A Monument (Concrete)	⊙▲
Existing Right of Way Line	— — —
Proposed Right of Way Line	—R/W—
Existing Control of Access Line	—C/A—
Proposed Control of Access Line	—C/A—
Proposed ROW and CA Line	—RW/CA—
Existing Easement Line	—— E ——
Proposed Temporary Construction Easement	—— E ——
Proposed Temporary Drainage Easement	—— TDE ——
Proposed Permanent Drainage Easement	—— PDE ——
Proposed Permanent Drainage/Utility Easement	—— DUE ——
Proposed Permanent Utility Easement	—— PUE ——
Proposed Temporary Utility Easement	—— TUE ——
Proposed Aerial Utility Easement	—— AUE ——

ROADS AND RELATED FEATURES:

Existing Edge of Pavement	— — — —
Existing Curb	— — — —
Proposed Slope Stakes Cut	_ _ _ C _ _ _
Proposed Slope Stakes Fill	_ _ _ F _ _ _
Proposed Curb Ramp	CR
Existing Metal Guardrail	⊤ ⊤ ⊤
Proposed Guardrail	⊤ ⊤ ⊤ ⊤
Existing Cable Guiderail	⊓ ⊓ ⊓
Proposed Cable Guiderail	⊓ ⊓ ⊓ ⊓
Equality Symbol	◐
Pavement Removal	⊠⊠⊠

VEGETATION:

Single Tree	✿
Single Shrub	✿
Hedge	﹏﹏﹏
Woods Line	⌒⌒⌒⌒
Orchard	✿ ✿ ✿ ✿
Vineyard	Vineyard

EXISTING STRUCTURES:

MAJOR:

Bridge, Tunnel or Box Culvert	CONC
Bridge Wing Wall, Head Wall and End Wall	) CONC WW (

MINOR:

Head and End Wall	CONC HW
Pipe Culvert	- - - - - -
Footbridge	>— — — —<
Drainage Box: Catch Basin, DI or JB	□ CB
Paved Ditch Gutter	— — — —
Storm Sewer Manhole	Ⓢ
Storm Sewer	—— S ——

UTILITIES:

** SUE – Subsurface Utility Engineering*
LOS – Level of Service – A,B,C or D (Accuracy)

POWER:

Existing Power Pole	●
Proposed Power Pole	○
Existing Joint Use Pole	—●—
Proposed Joint Use Pole	—○—
Power Manhole	Ⓟ
Power Line Tower	⊠
Power Transformer	▨
U/G Power Cable Hand Hole	HH
H-Frame Pole	●—●
U/G Power Line Test Hole (SUE – LOS A)*	◐
U/G Power Line (SUE – LOS B)*	— — — P — — —
U/G Power Line (SUE – LOS C)*	—— — P — ——
U/G Power Line (SUE – LOS D)*	—— P ——

TELEPHONE:

Existing Telephone Pole	—●—
Proposed Telephone Pole	—○—
Telephone Manhole	Ⓣ
Telephone Pedestal	T
Telephone Cell Tower	⚲
U/G Telephone Cable Hand Hole	HH
U/G Telephone Test Hole (SUE – LOS A)*	◐
U/G Telephone Cable (SUE – LOS B)*	— — — T — — —
U/G Telephone Cable (SUE – LOS C)*	—— — T — ——
U/G Telephone Cable (SUE – LOS D)*	—— T ——
U/G Telephone Conduit (SUE – LOS B)*	— — — TC — — —
U/G Telephone Conduit (SUE – LOS C)*	—— — TC — ——
U/G Telephone Conduit (SUE – LOS D)*	—— TC ——
U/G Fiber Optics Cable (SUE – LOS B)*	— — — T FO — — —
U/G Fiber Optics Cable (SUE – LOS C)*	—— — T FO — ——
U/G Fiber Optics Cable (SUE – LOS D)*	—— T FO ——

WATER:

Water Manhole	Ⓦ
Water Meter	⬭
Water Valve	⊗
Water Hydrant	⊙
U/G Water Line Test Hole (SUE – LOS A)*	◐
U/G Water Line (SUE – LOS B)*	— — — W — — —
U/G Water Line (SUE – LOS C)*	—— — W — ——
U/G Water Line (SUE – LOS D)*	—— W ——
Above Ground Water Line	A/G Water

TV:

TV Pedestal	C
TV Tower	⊗
U/G TV Cable Hand Hole	HH
U/G TV Test Hole (SUE – LOS A)*	◐
U/G TV Cable (SUE – LOS B)*	— — — TV — — —
U/G TV Cable (SUE – LOS C)*	—— — TV — ——
U/G TV Cable (SUE – LOS D)*	—— TV ——
U/G Fiber Optic Cable (SUE – LOS B)*	— — — TV FO — — —
U/G Fiber Optic Cable (SUE – LOS C)*	—— — TV FO — ——
U/G Fiber Optic Cable (SUE – LOS D)*	—— TV FO ——

GAS:

Gas Valve	◇
Gas Meter	◈
U/G Gas Line Test Hole (SUE – LOS A)*	◐
U/G Gas Line (SUE – LOS B)*	— — — G — — —
U/G Gas Line (SUE – LOS C)*	—— — G — ——
U/G Gas Line (SUE – LOS D)*	—— G ——
Above Ground Gas Line	A/G Gas

SANITARY SEWER:

Sanitary Sewer Manhole	◎
Sanitary Sewer Cleanout	⊕
U/G Sanitary Sewer Line	—— SS ——
Above Ground Sanitary Sewer	A/G Sanitary Sewer
SS Force Main Line Test Hole (SUE – LOS A)*	◐
SS Force Main Line (SUE – LOS B)*	— — — FSS — — —
SS Force Main Line (SUE – LOS C)*	—— — FSS — ——
SS Force Main Line (SUE – LOS D)*	—— FSS ——

MISCELLANEOUS:

Utility Pole	●
Utility Pole with Base	⊡
Utility Located Object	⊙
Utility Traffic Signal Box	S
Utility Unknown U/G Line (SUE – LOS B)*	—— ?UTL ——
U/G Tank; Water, Gas, Oil	▭
Underground Storage Tank, Approx. Loc.	UST
A/G Tank; Water, Gas, Oil	▭
Geoenvironmental Boring	☢
Abandoned According to Utility Records	AATUR
End of Information	E.O.I.

6/2/99

PROJECT REFERENCE NO.	SHEET NO.
R-5861	2A-1

ROADWAY DESIGN ENGINEER	PAVEMENT DESIGN ENGINEER
DocuSigned by: Brandon McInnis BE6912CC24204D4... SEAL 29470 BRANDON J. McINNIS 10/31/2023	DocuSigned by: Gregory Goins A40B119A1E2B43C... SEAL 041709 GREGORY K. GOINS 10/30/2023

DOCUMENT NOT CONSIDERED FINAL UNLESS ALL SIGNATURES COMPLETED

FINAL PAVEMENT SCHEDULE

C1	PROP. APPROX. 3″ ASPHALT CONCRETE SURFACE COURSE, TYPE S9.5C, AT AN AVERAGE RATE OF 168 LBS. PER SQ. YD. IN EACH OF TWO LAYERS	J1	PROP. 6″ AGGREGATE BASE COURSE	U	EXISTING PAVEMENT
C2	PROP. VAR. DEPTH ASPHALT CONCRETE SURFACE COURSE, TYPE S9.5C, AT AN AVERAGE RATE OF 112 LBS. PER SQ. YD. PER 1″ DEPTH TO BE PLACED IN LAYERS NOT LESS THAN 1.5″ OR GREATER THAN 2″ IN DEPTH.	J2	PROP. 8″ AGGREGATE BASE COURSE	V	3″ ASPHALT MILLING
C3	PROP. APPROX. 1.5″ ASPHALT CONCRETE SURFACE COURSE, TYPE S9.5C, AT AN AVERAGE RATE OF 168 LBS. PER SQ. YD.	J3	PROP. 7″ AGGREGATE BASE COURSE	V1	0″-1.5″ ASPHALT MILLING
D1	PROP. APPROX. 2½″ ASPHALT CONCRETE INTERMEDIATE COURSE, TYPE I19.0C, AT AN AVERAGE RATE OF 285 LBS. PER SQ. YD.	J4	PROP. VAR DEPTH AGGREGATE BASE COURSE	W	VARIABLE DEPTH ASPHALT PAVEMENT (SEE WEDGING DETAILS)
D2	PROP. APPROX. 4″ ASPHALT CONCRETE INTERMEDIATE COURSE, TYPE I19.0C, AT AN AVERAGE RATE OF 456 LBS. PER SQ. YD.	K	12″ CLASS IV SUBGRADE STABILIZATION		
D3	PROP. VAR. DEPTH ASPHALT CONCRETE INTERMEDIATE COURSE, TYPE I19.0C, AT AN AVERAGE RATE OF 114 LBS. PER SQ. YD. PER 1″ DEPTH, TO BE PLACED IN LAYERS NOT LESS THAN 2½″ IN DEPTH OR GREATER THAN 4″ IN DEPTH.	N	GEOTEXTILE FOR SOIL STABILIZATION		
D4	PROP. APPROX. 3″ ASPHALT CONCRETE INTERMEDIATE COURSE, TYPE I19.0C, AT AN AVERAGE RATE OF 342 LBS. PER SQ. YD.	R1	2′-6′′ CONCRETE CURB AND GUTTER		
E1	PROP. 4″ DEPTH ASPHALT CONCRETE BASE COURSE, TYPE B25.0C, AT AN AVERAGE RATE OF 456 LBS. PER SQ. YD.	R2	SHOULDER BERM GUTTER		
E2	PROP. 5″ DEPTH ASPHALT CONCRETE BASE COURSE, TYPE B25.0C, AT AN AVERAGE RATE OF 570 LBS. PER SQ. YD.	R3	EXPRESSWAY GUTTER		
E3	PROP. 4.5″ DEPTH ASPHALT CONCRETE BASE COURSE, TYPE B25.0C, AT AN AVERAGE RATE OF 513 LBS. PER SQ. YD.	R4	8″ X 12″ CURB		
E4	PROP. VAR. DEPTH ASPHALT CONCRETE BASE COURSE, TYPE B25.0C, AT AN AVERAGE RATE OF 114 LBS. PER SQ. YD. PER 1″ DEPTH, TO BE PLACED IN LAYERS NOT LESS THAN 3″ IN DEPTH OR GREATER THAN 5½″ IN DEPTH.	R5	VALLEY GUTTER		
E5	PROP. 3″ DEPTH ASPHALT CONCRETE BASE COURSE, TYPE B25.0C, AT AN AVERAGE RATE OF 342 LBS. PER SQ. YD.	T	EARTH MATERIAL		

NOTES: PAVEMENT EDGE SLOPES ARE 1:1 UNLESS SHOWN OTHERWISE.
SEE PLANS FOR LOCATIONS OF CONCRETE ISLANDS, TURN LANES, AND TAPERS

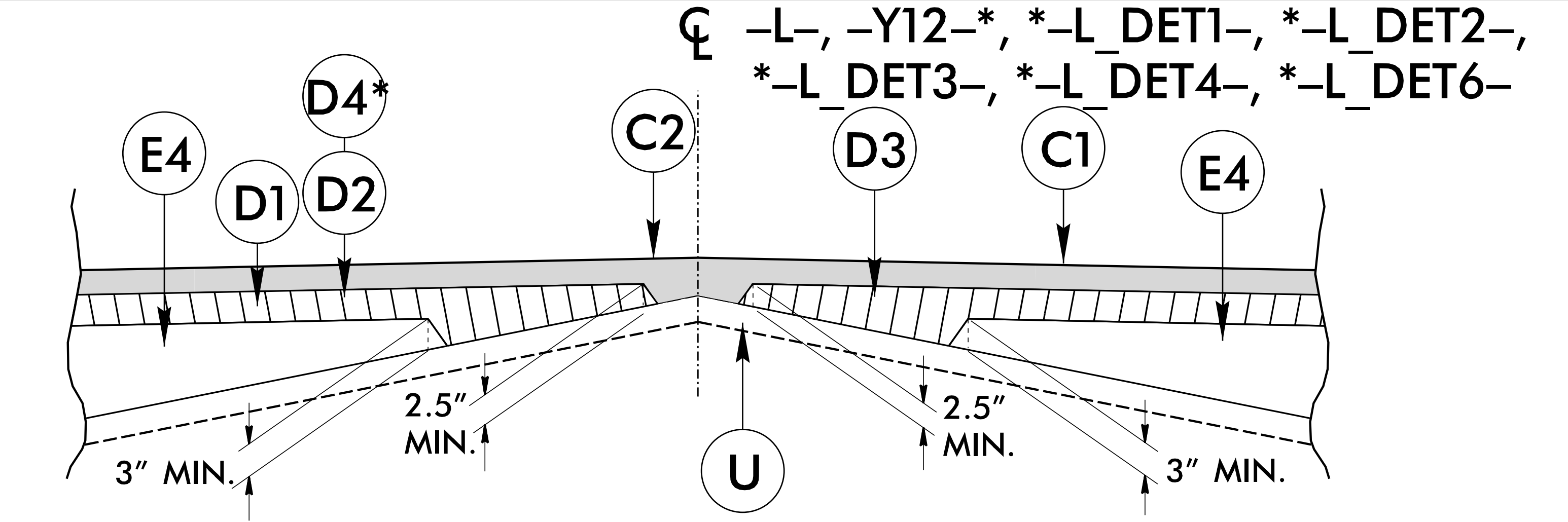
℄ -L-, -Y12-*, *-L_DET1-, *-L_DET2-, *-L_DET3-, *-L_DET4-, *-L_DET6-
D4*
E4
D1
D2
C2
D3
C1
E4
2.5″ MIN.
2.5″ MIN.
3″ MIN.
3″ MIN.
U

Detail Showing Method of Wedging

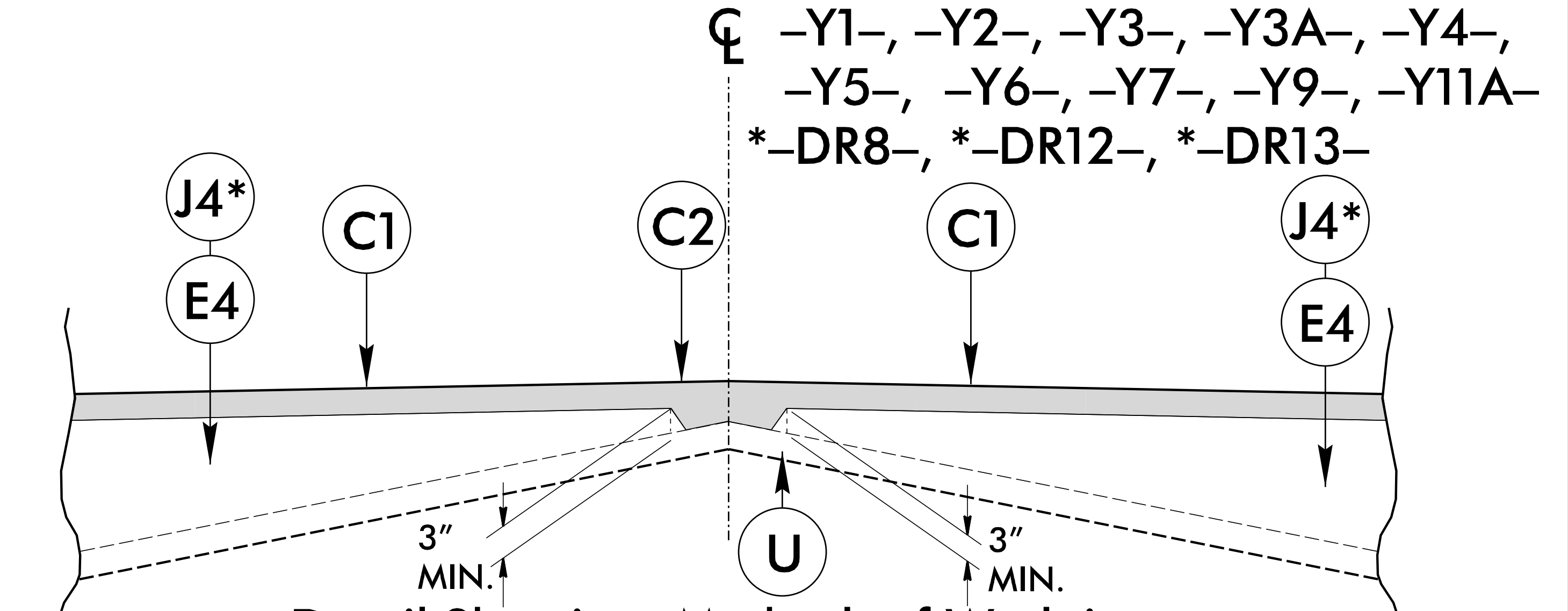
℄ -Y1-, -Y2-, -Y3-, -Y3A-, -Y4-, -Y5-, -Y6-, -Y7-, -Y9-, -Y11A- *-DR8-, *-DR12-, *-DR13-
J4*
E4
C1
C2
C1
J4*
E4
3″ MIN.
3″ MIN.
U

Detail Showing Method of Wedging

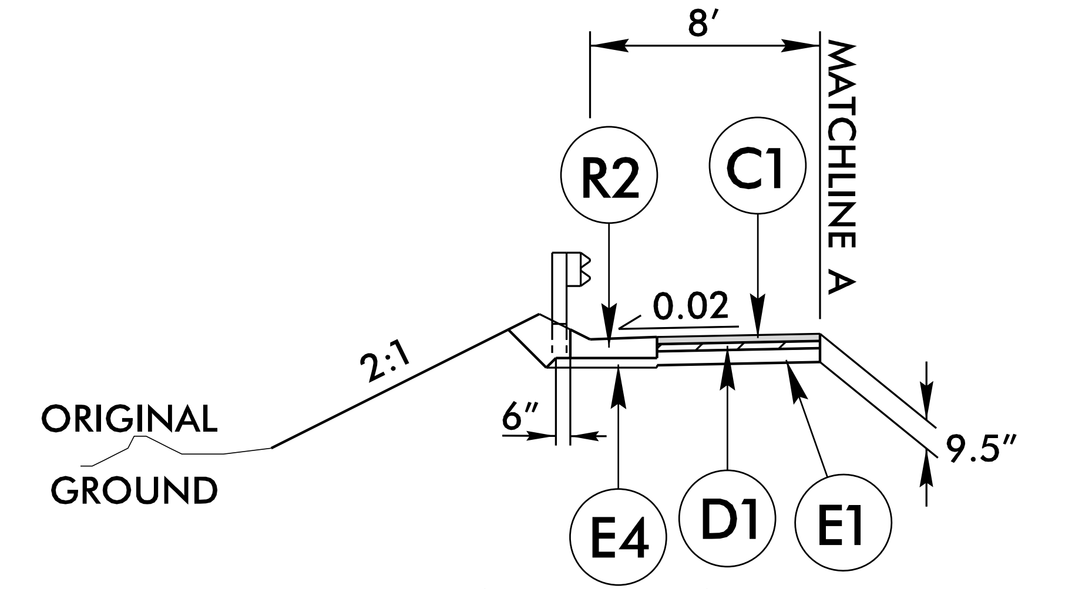
8′
MATCHLINE A
R2
C1
0.02
2:1
ORIGINAL GROUND
6″
9.5″
E4
D1
E1

INSET A

USE WITH TYPICAL SECTIONS NO. 1 & 2

-L- STA. 12+67.00 TO -L- STA. 17+50.00	*-L- STA. 56+86.00 TO -L- STA. 61+00.00
-L- STA. 32+50.00 TO -L- STA. 37+74.00	*-L- STA. 68+32.00 TO -L- STA. 73+25.00
-L- STA. 110+96.50 TO -L- STA. 114+02.00	*-L- STA. 84+45.00 TO -L- STA. 88+09.00
-L- STA. 119+00.00 TO -L- STA. 122+00.00	*-L- STA. 96+87.00 TO -L- STA. 98+96.50
-L- STA. 124+45.00 TO -Y8- STA. 12+22.00	*-L- STA. 100+48.00 TO -L- STA. 101+97.50
-L- STA. 130+48.00 TO -L- STA. 132+21.00	*-L- STA. 145+45.00 TO -L- STA. 148+22.00
-L- STA. 189+00.00 TO -L- STA. 191+28.00	*-L- STA. 153+19.00 TO -L- STA. 160+00.00
	*-L- STA. 179+09.00 TO -L- STA. 181+52.00

*REVERSE INSET

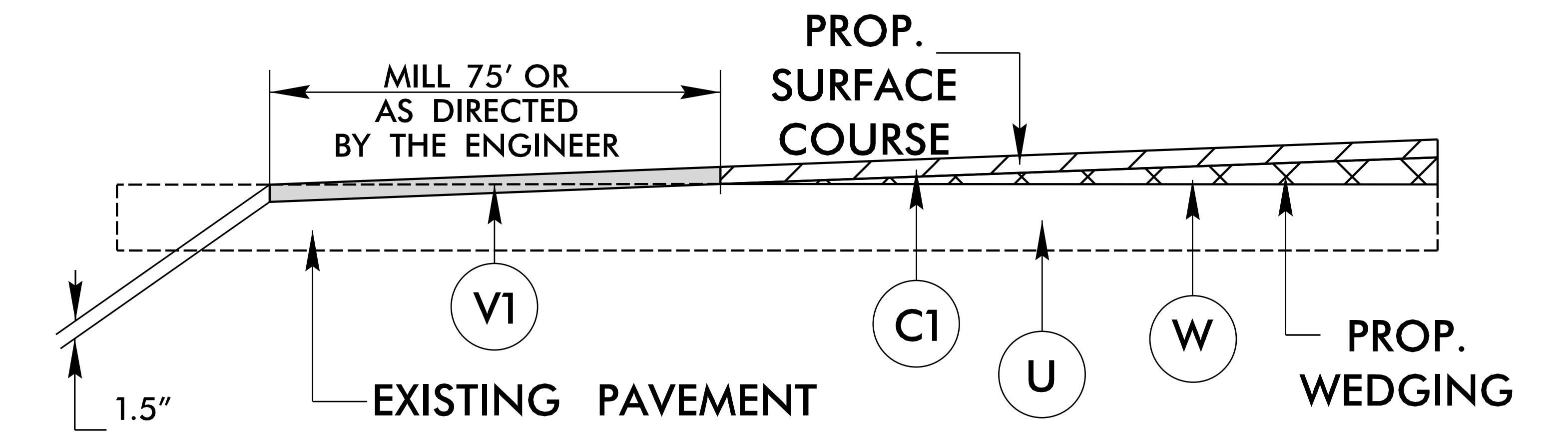
MILL 75′ OR AS DIRECTED BY THE ENGINEER
PROP. SURFACE COURSE
V1
C1
U
W
PROP. WEDGING
1.5″
EXISTING PAVEMENT

NOTE: MIRROR FOR END CONSTRUCTION

INCIDENTAL MILLING DETAIL

MILL EXISTING PAVEMENT ON THE FOLLOWING ALIGNEMENT TIES:
-L-

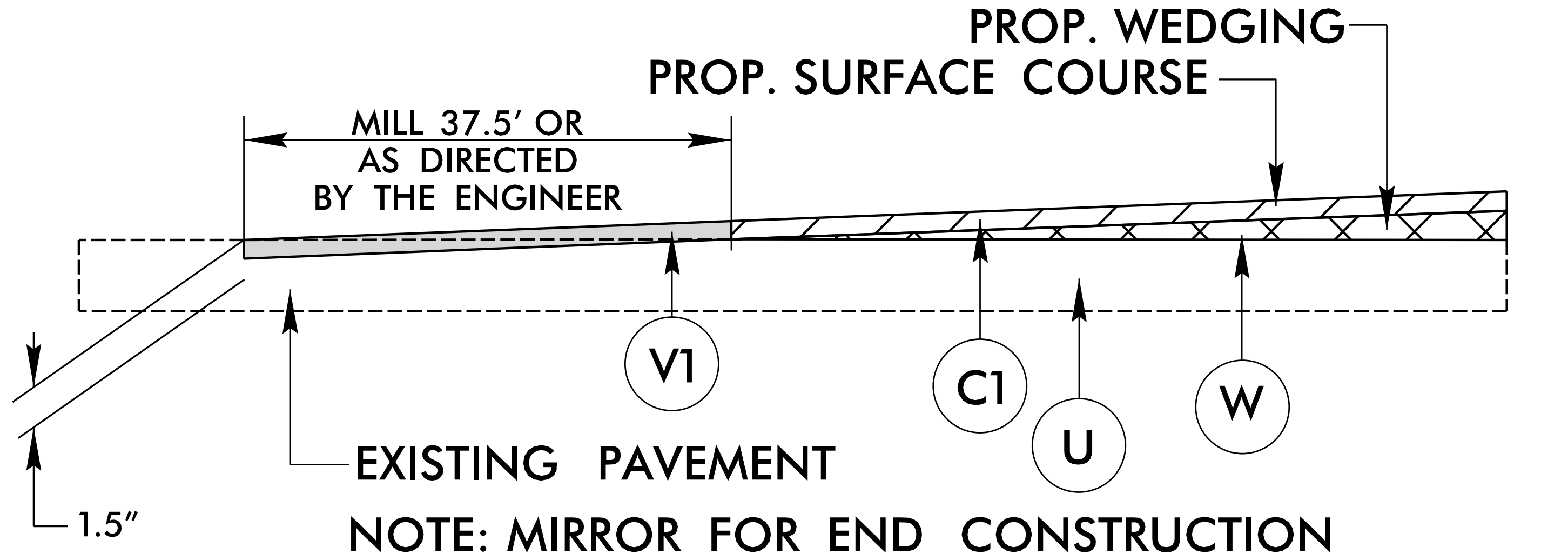
PROP. WEDGING
PROP. SURFACE COURSE
MILL 37.5′ OR AS DIRECTED BY THE ENGINEER
V1
C1
U
W
1.5″
EXISTING PAVEMENT

NOTE: MIRROR FOR END CONSTRUCTION

INCIDENTAL MILLING DETAIL

MILL EXISTING PAVEMENT ON THE FOLLOWING ALIGNEMENT TIES:

-Y1- -Y3- -Y5- -Y7- -Y9- -Y10B-
-Y2- -Y3A- -Y6- -Y8- -Y10A- -Y11-

RK&K
P: (919) 878-9560
8601 Six Forks Road, Forum 1,Suite 700
Raleigh, North Carolina 27615-3960
NC License No. F-0112
Engineers | Construction Managers | Planners | Scientists
www.rkk.com
Responsive People | Creative Solutions

10/5/2023
R:\Roadway\Proj\R5861_Rdy_typ.dgn
bespinosa

PROJECT REFERENCE NO.	SHEET NO.
R-5861	2A-2

ROADWAY DESIGN ENGINEER	PAVEMENT DESIGN ENGINEER
DocuSigned by: Brandon McInnis BE6912CC24204D4... SEAL 29470 BRANDON J. McINNIS 10/31/2023	DocuSigned by: Gregory Goins A40B119A1E2B43C... SEAL 041709 GREGORY K. GOINS 10/30/2023

DOCUMENT NOT CONSIDERED FINAL UNLESS ALL SIGNATURES COMPLETED

6/2/99

PAVEMENT SCHEDULE

C1	3″ S9.5C	J3	7″ ABC
C2	VAR. S9.5C	J4	VAR. ABC
C3	1.5″ S9.5C	K	12″ STABILIZATION
D1	2½″ I19.0C	N	GEOTEXTILE
D2	4″ I19.0C	R1	2′-6″ C&G
D3	VAR. I19.0C	R2	SHOULDER BERM GUTTER
D4	3″ I19.0C	R3	EXPRESSWAY
E1	4″ B25.0C	R4	8″X12″ CURB
E2	5″ B25.0C	R5	VALLEY GUTTER
E3	4.5″ B25.0C	T	EARTH
E4	VAR. B25.0C	U	EXISTING PAVEMENT
E5	3″ B25.0C	V	3″ MILLING
J1	6″ ABC	W	WEDGING
J2	8″ ABC		

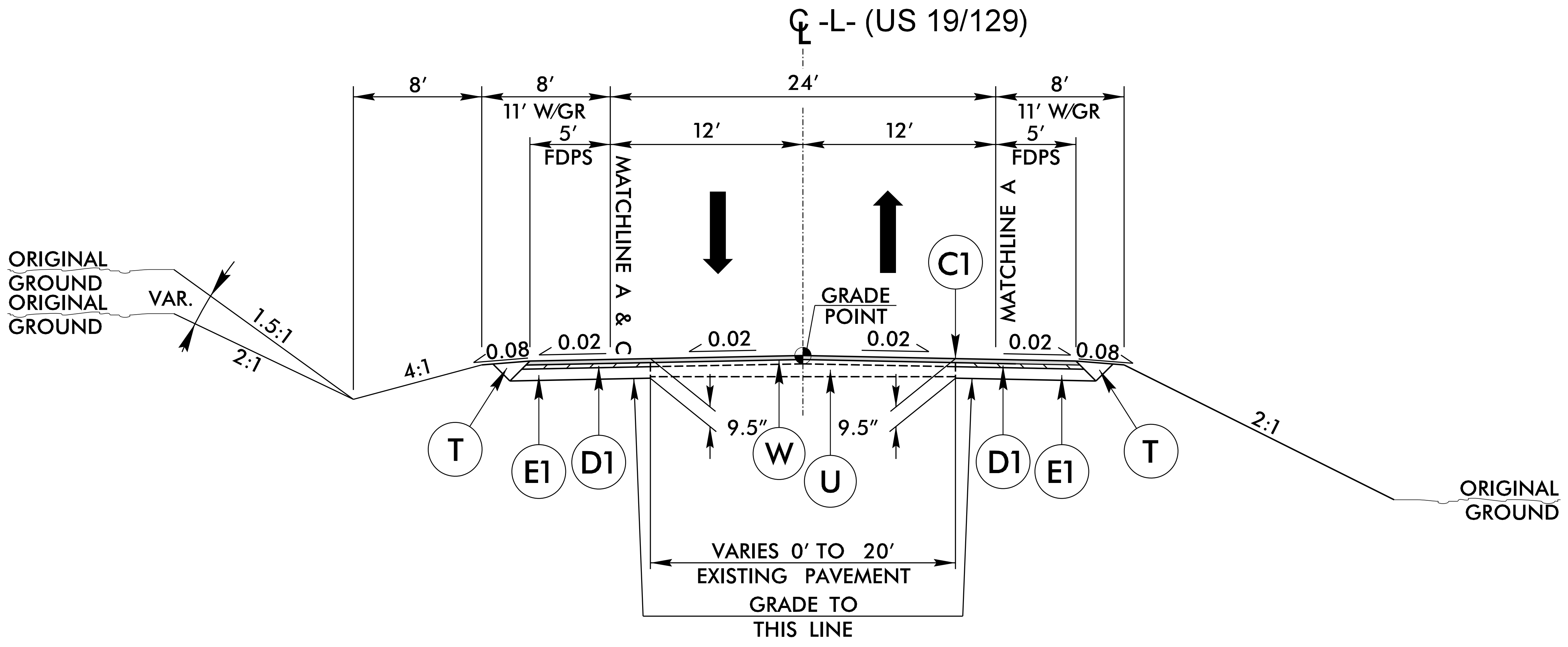

℄ -L- (US 19/129)
8′
8′
11′ W/GR
5′
FDPS
24′
12′
12′
8′
11′ W/GR
5′
FDPS
MATCHLINE A & C
MATCHLINE A
ORIGINAL GROUND
ORIGINAL GROUND
VAR.
1.5:1
2:1
4:1
0.08
0.02
0.02
GRADE POINT
0.02
0.02
0.08
C1
9.5″
9.5″
T
E1
D1
W
U
D1
E1
T
2:1
ORIGINAL GROUND
VARIES 0′ TO 20′
EXISTING PAVEMENT
GRADE TO THIS LINE

TYPICAL SECTION NO. 1

USE TYPICAL SECTION NO. 1

–L– STA. 10+25.00 TO STA. 16+75.00
–L– STA. 49+65.00 TO STA. 85+00.00
–L– STA. 130+00.00 TO STA. 140+75.00
–L– STA. 150+25.00 TO STA. 157+00.00
–L– STA. 197+25.00 TO STA. 197+50.85

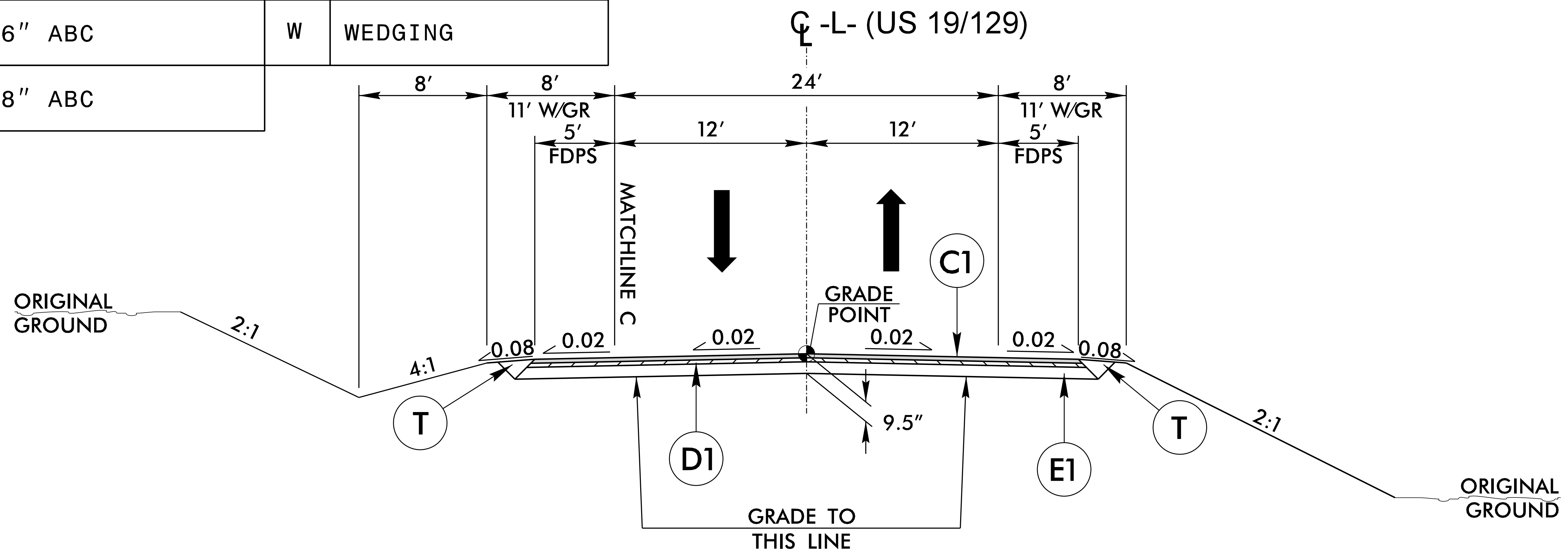

℄ -L- (US 19/129)
8′
8′
11′ W/GR
5′
FDPS
24′
12′
12′
8′
11′ W/GR
5′
FDPS
MATCHLINE C
C1
ORIGINAL GROUND
2:1
4:1
0.08
0.02
0.02
GRADE POINT
0.02
0.02
0.08
9.5″
T
D1
E1
T
2:1
ORIGINAL GROUND
GRADE TO THIS LINE

TYPICAL SECTION NO. 2

USE TYPICAL SECTION NO. 2

–L– STA. 16+75.00 TO STA. 49+65.00
–L– STA. 85+00.00 TO STA. 130+00.00
–L– STA. 140+75.00 TO STA. 150+25.00
–L– STA. 157+00.00 TO STA. 197+25.00

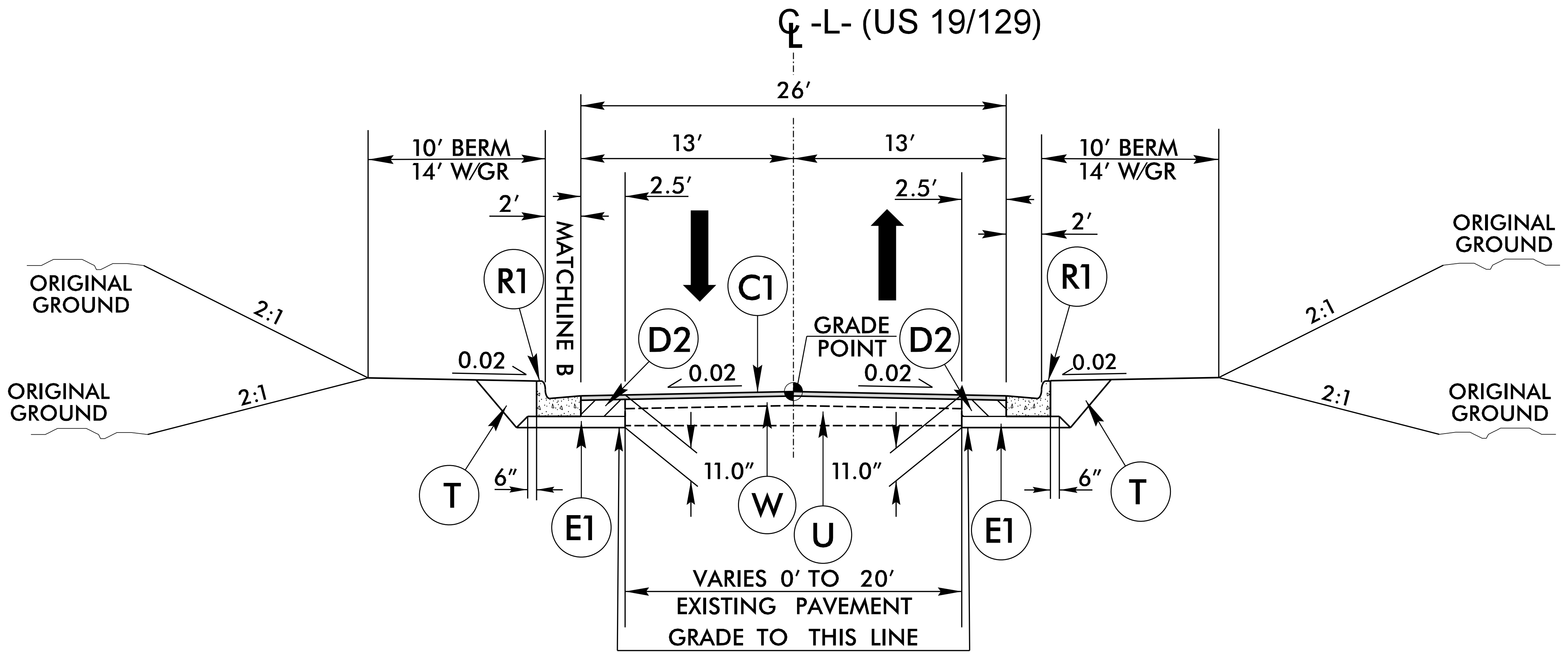

℄ -L- (US 19/129)
26′
10′ BERM
14′ W/GR
13′
13′
10′ BERM
14′ W/GR
2′
2.5′
2.5′
2′
MATCHLINE B
ORIGINAL GROUND
ORIGINAL GROUND
ORIGINAL GROUND
ORIGINAL GROUND
R1
C1
R1
2:1
2:1
2:1
2:1
0.02
D2
0.02
GRADE POINT
D2
0.02
0.02
6″
11.0″
11.0″
6″
T
E1
W
U
E1
T
VARIES 0′ TO 20′
EXISTING PAVEMENT
GRADE TO THIS LINE

TYPICAL SECTION NO. 3

USE TYPICAL SECTION NO. 3

–L– STA. 197+50.85 TO STA. 209+46.83

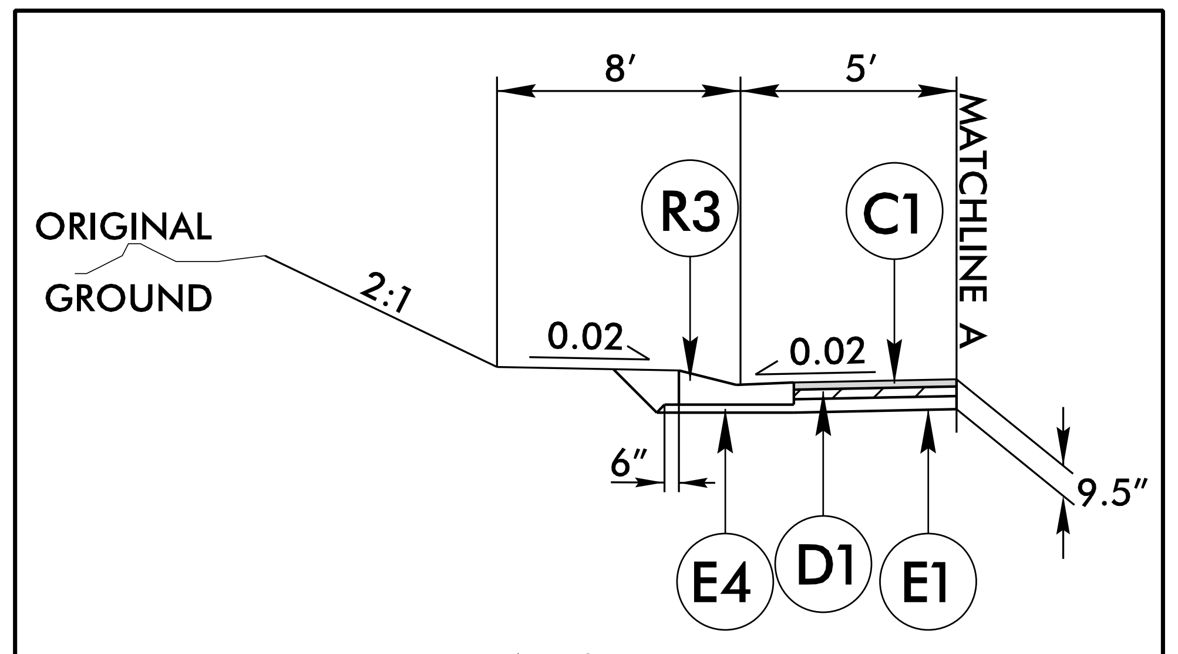

8′
5′
MATCHLINE A
ORIGINAL GROUND
R3
C1
2:1
0.02
0.02
6″
9.5″
E4
D1
E1

INSET B

USE WITH TYPICAL SECTIONS NO. 1

–L– STA. 52+93.00 TO –L– STA. 56+00.00
–L– STA. 196+98.00 TO –L– STA. 198+00.00

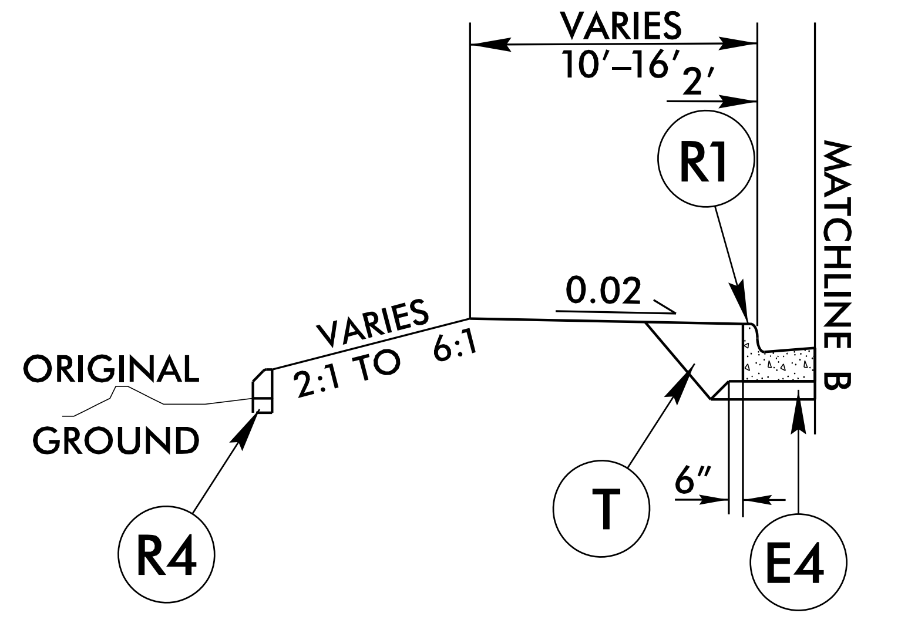

VARIES
10′-16′
2′
MATCHLINE B
R1
ORIGINAL GROUND
VARIES
2:1 TO 6:1
0.02
T
6″
R4
E4

INSET C

USE WITH TYPICAL SECTION NO. 3

–L– STA. 200+30.58 TO STA. 200+92.03 LT
–L– STA. 201+08.00 TO STA. 204+37.00 LT
–L– STA. 204+52.87 TO STA. 206+41.29 LT
*–L– STA. 197+52.51 TO STA. 200+91.98 RT
*–L– STA. 201+08.04 TO STA. 204+37.00 RT
*–L– STA. 204+52.87 TO STA. 204+75.58 RT
*REVERSE INSET

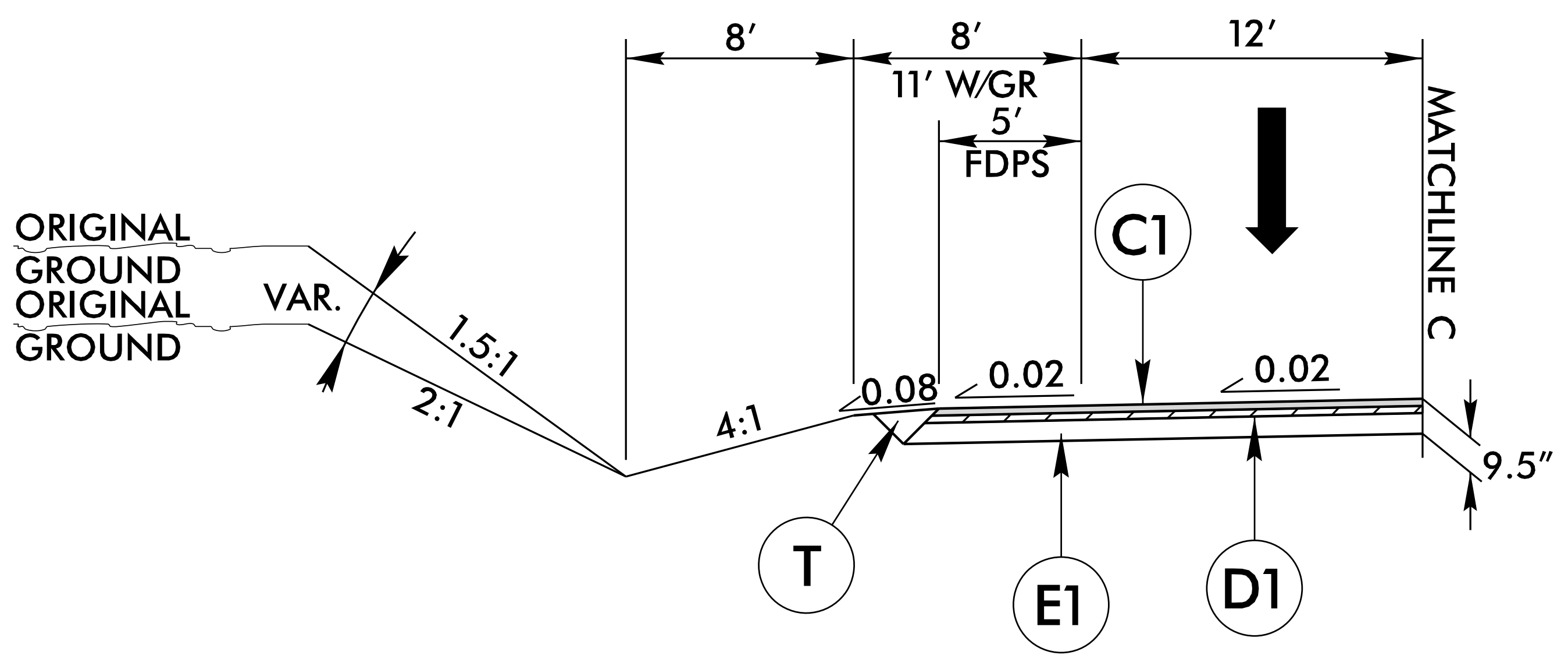

8′
8′
11′ W/GR
5′
FDPS
12′
MATCHLINE C
ORIGINAL GROUND
ORIGINAL GROUND
VAR.
1.5:1
2:1
4:1
C1
0.08
0.02
0.02
9.5″
T
E1
D1

INSET D

USE WITH TYPICAL SECTIONS NO. 1, 2 & 3

–L– STA. 153+35.66 TO –L– STA. 197+00.06

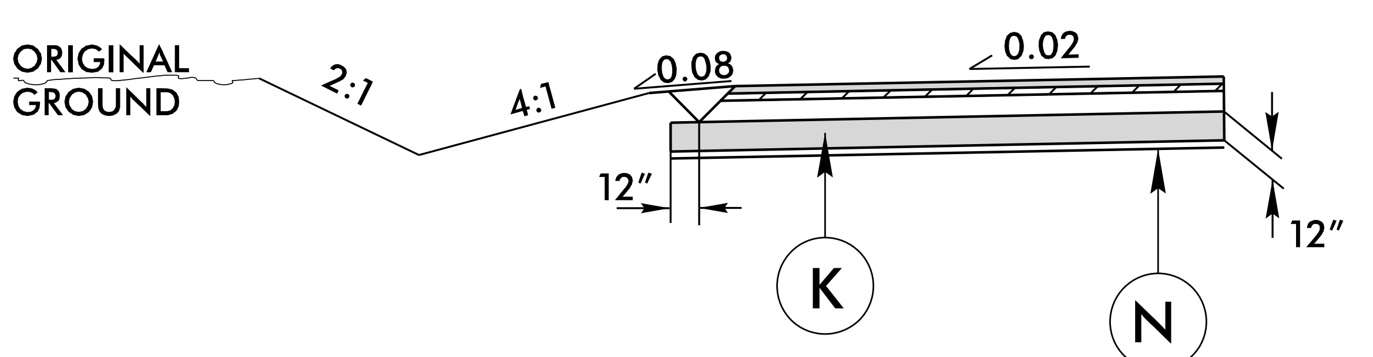

ORIGINAL GROUND
2:1
4:1
0.08
0.02
12″
12″
K
N

SHALLOW UNDERCUT DETAIL

USE WITH TYPICAL NO. 2

–L– STA. 158+75.00 TO STA. 160+75.00

NOTE: SEE PLANS FOR LOCATIONS OF CONCRETE ISLANDS, TURN LANES, AND TAPERS.

10/5/2023
R:\Roadway\Proj\R5861_Rdy_typ.dgn
bespinosa

RK&K
P: (919) 878-9560
8601 Six Forks Road, Forum 1,Suite 700
Raleigh, North Carolina 27615-3960
NC License No. F-0112
Engineers | Construction Managers | Planners | Scientists
www.rkk.com
Responsive People | Creative Solutions

PAVEMENT SCHEDULE	
C1	3″ S9.5C
C2	VAR. S9.5C
C3	1.5″ S9.5C
D1	2½″ I19.0C
D2	4″ I19.0C
D3	VAR. I19.0C
D4	3″ I19.0C
E1	4″ B25.0C
E2	5″ B25.0C
E3	4.5″ B25.0C
E4	VAR. B25.0C
E5	3″ B25.0C
J1	6″ ABC
J2	8″ ABC
J3	7″ ABC
J4	VAR. ABC
K	12″ STABILIZATION
N	GEOTEXTILE
R1	2′-6″ C&G
R2	SHOULDER BERM GUTTER
R3	EXPRESSWAY
R4	8″X12″ CURB
R5	VALLEY GUTTER
T	EARTH
U	EXISTING PAVEMENT
V	3″ MILLING
W	WEDGING

PROJECT REFERENCE NO.	SHEET NO.
R-5861	2A-3

ROADWAY DESIGN ENGINEER

BRANDON J. McINNIS
SEAL 29470
DocuSigned by: Brandon McInnis
BE6912CC24204D4...
10/31/2023

PAVEMENT DESIGN ENGINEER

GREGORY K. GOINS
SEAL 041709
DocuSigned by: Gregory Goins
A40B119A1E2B43C...
10/30/2023

DOCUMENT NOT CONSIDERED FINAL UNLESS ALL SIGNATURES COMPLETED

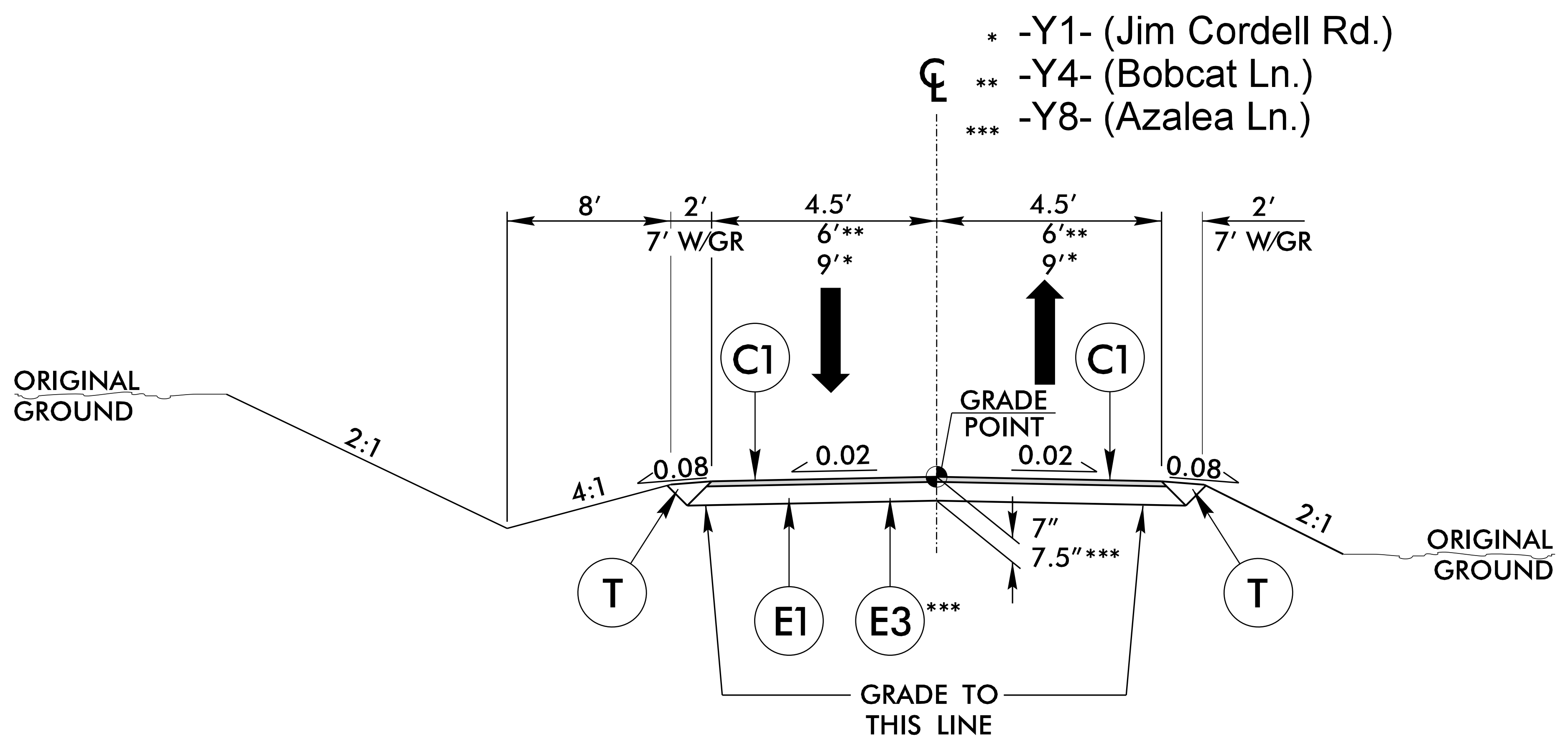
℄
* -Y1- (Jim Cordell Rd.)
** -Y4- (Bobcat Ln.)
*** -Y8- (Azalea Ln.)
8′
2′
7′ W/GR
4.5′
6′**
9′*
4.5′
6′**
9′*
2′
7′ W/GR
C1
C1
GRADE POINT
ORIGINAL GROUND
2:1
4:1
0.08
0.02
0.02
0.08
2:1
ORIGINAL GROUND
7″
7.5″***
T
E1
E3***
T
GRADE TO THIS LINE

TYPICAL SECTION NO. 4

USE TYPICAL SECTION NO. 4
* -Y1- STA. 12+09.72 TO STA. 16+59.03
** -Y4- STA. 12+72.00 TO STA. 15+28.75
*** -Y8- STA. 10+50.00 TO STA. 12+64.64

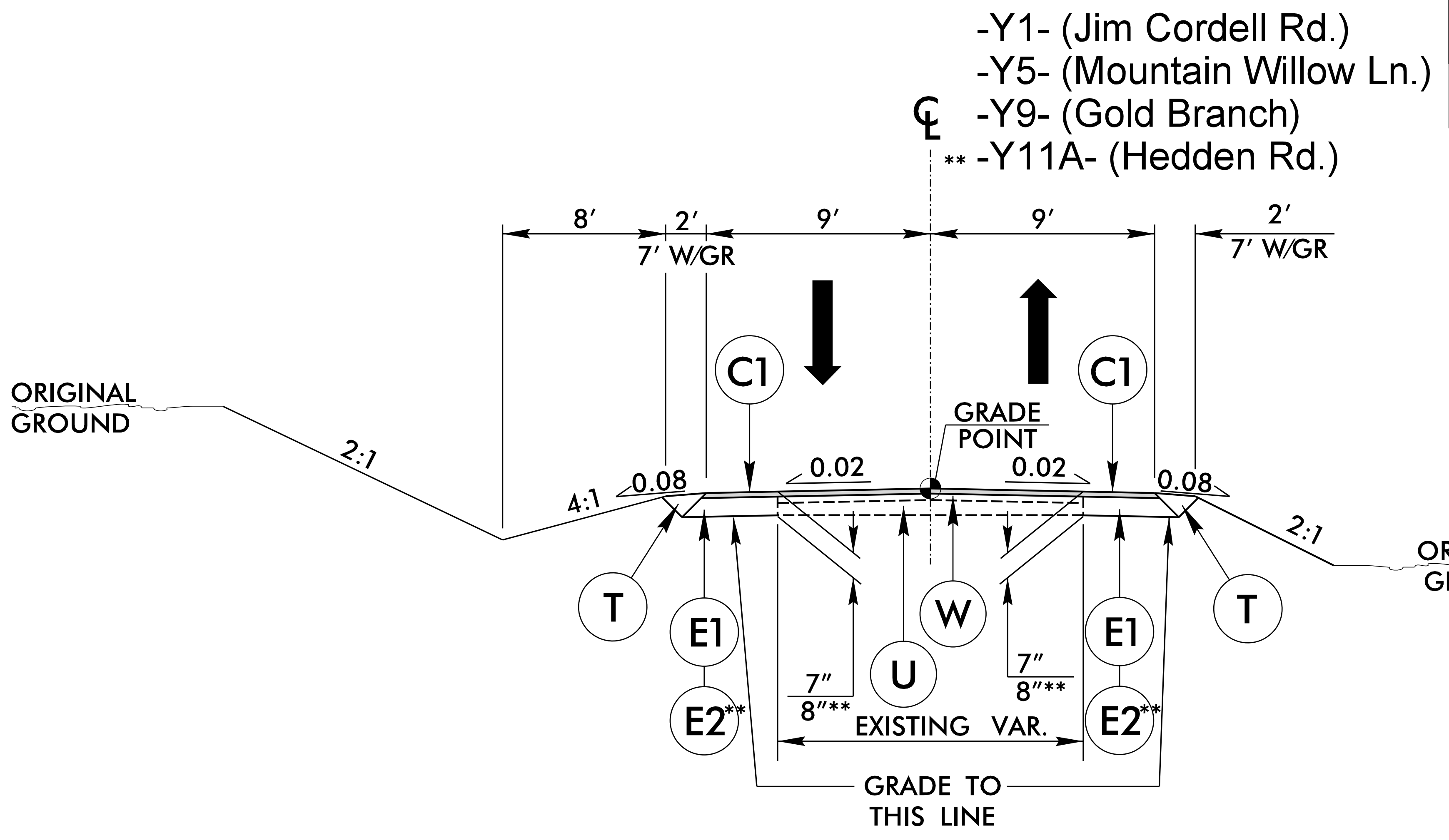
℄
-Y1- (Jim Cordell Rd.)
-Y5- (Mountain Willow Ln.)
-Y9- (Gold Branch)
** -Y11A- (Hedden Rd.)
8′
2′
7′ W/GR
9′
9′
2′
7′ W/GR
C1
C1
GRADE POINT
ORIGINAL GROUND
2:1
4:1
0.08
0.02
0.02
0.08
2:1
ORIGINAL GROUND
T
E1
E2**
W
U
7″
8″**
7″
8″**
EXISTING VAR.
E1
E2**
T
GRADE TO THIS LINE

TYPICAL SECTION NO. 5

USE TYPICAL SECTION NO. 5
-Y1- STA. 10+30.00 TO STA. 12+09.72
-Y5- STA. 10+20.07 TO STA. 11+40.00
-Y9- STA. 10+12.02 TO STA. 13+50.00
** -Y11A- STA. 10+10.01 TO STA. 12+35.00

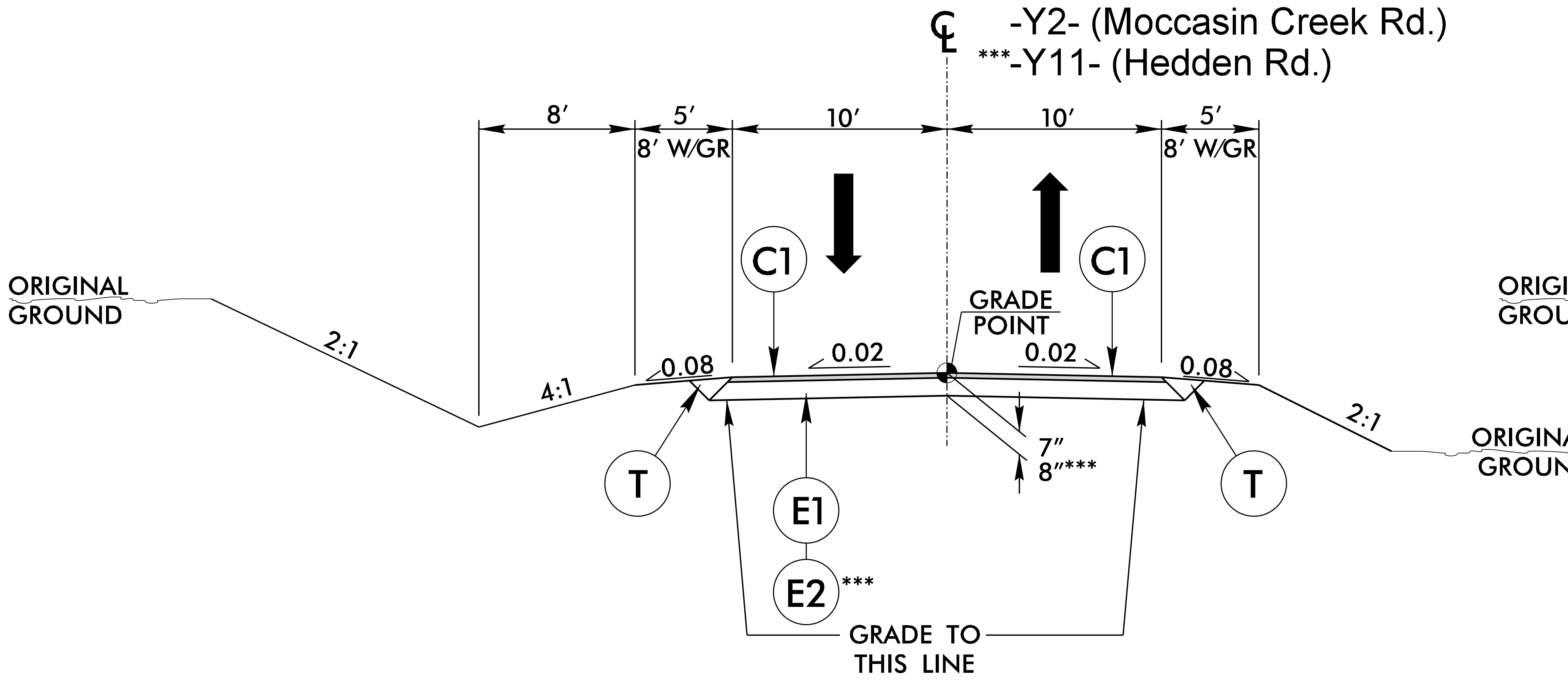
℄
-Y2- (Moccasin Creek Rd.)
*** -Y11- (Hedden Rd.)
8′
5′
8′ W/GR
10′
10′
5′
8′ W/GR
C1
C1
GRADE POINT
ORIGINAL GROUND
2:1
4:1
0.08
0.02
0.02
0.08
2:1
ORIGINAL GROUND
7″
8″***
T
E1
E2***
T
GRADE TO THIS LINE

TYPICAL SECTION NO. 6

USE TYPICAL SECTION NO.6
-Y2- STA. 10+18.00 TO STA. 13+02.58
*** -Y11- STA. 10+18.07 TO STA. 14+43.61

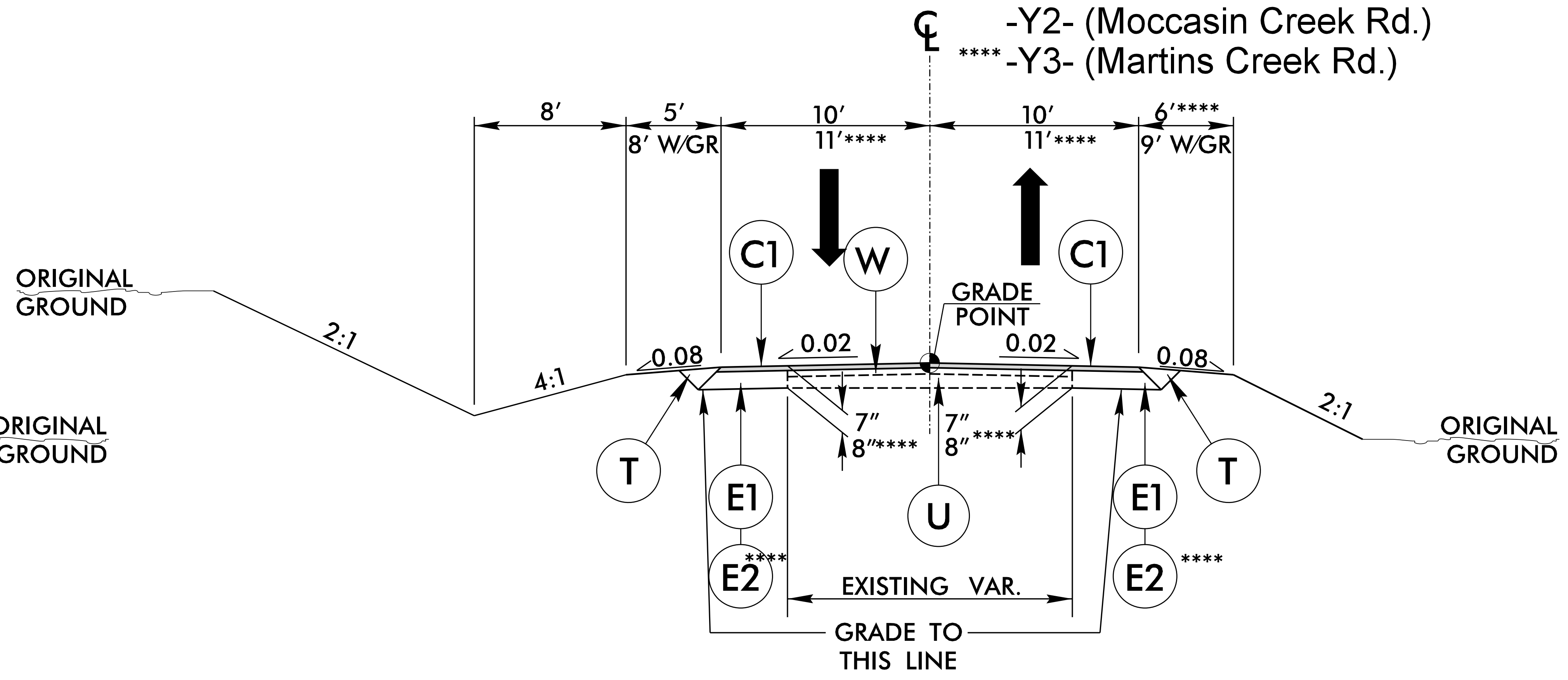
℄
-Y2- (Moccasin Creek Rd.)
**** -Y3- (Martins Creek Rd.)
8′
5′
8′ W/GR
10′
11′****
10′
11′****
6′****
9′ W/GR
C1
W
C1
GRADE POINT
ORIGINAL GROUND
2:1
4:1
0.08
0.02
0.02
0.08
2:1
ORIGINAL GROUND
7″
8″****
7″
8″****
T
E1
E2****
U
EXISTING VAR.
E1
E2****
T
GRADE TO THIS LINE

TYPICAL SECTION NO. 7

USE TYPICAL SECTION NO. 7
-Y2- STA. 13+02.58 TO STA. 14+70.00
**** -Y3- STA. 11+25.00 TO STA. 12+58.00

NOTE: SEE PLANS FOR LOCATIONS OF CONCRETE ISLANDS, TURN LANES, AND TAPERS.

RK&K
P: (919) 878-9560
8601 Six Forks Road, Forum 1,Suite 700
Raleigh, North Carolina 27615-3960
NC License No. F-0112
Engineers | Construction Managers | Planners | Scientists
www.rkk.com
Responsive People | Creative Solutions

6/2/99

PAVEMENT SCHEDULE	
C1	3" S9.5C
C2	VAR. S9.5C
C3	1.5" S9.5C
D1	2½" I19.0C
D2	4" I19.0C
D3	VAR. I19.0C
D4	3" I19.0C
E1	4" B25.0C
E2	5" B25.0C
E3	4.5" B25.0C
E4	VAR. B25.0C
E5	3" B25.0C
J1	6" ABC
J2	8" ABC
J3	7" ABC
J4	VAR. ABC
K	12" STABILIZATION
N	GEOTEXTILE
R1	2'-6" C&G
R2	SHOULDER BERM GUTTER
R3	EXPRESSWAY
R4	8"X12" CURB
R5	VALLEY GUTTER
T	EARTH
U	EXISTING PAVEMENT
V	3" MILLING
W	WEDGING

PROJECT REFERENCE NO.	SHEET NO.
R-5861	2A-4

ROADWAY DESIGN ENGINEER	PAVEMENT DESIGN ENGINEER
DocuSigned by: Brandon McInnis BE6912CC24204D4... SEAL 29470 BRANDON J. McINNIS 10/31/2023	DocuSigned by: Gregory Goins A40B119A1E2B43C... SEAL 041709 GREGORY K. GOINS 10/30/2023

DOCUMENT NOT CONSIDERED FINAL UNLESS ALL SIGNATURES COMPLETED

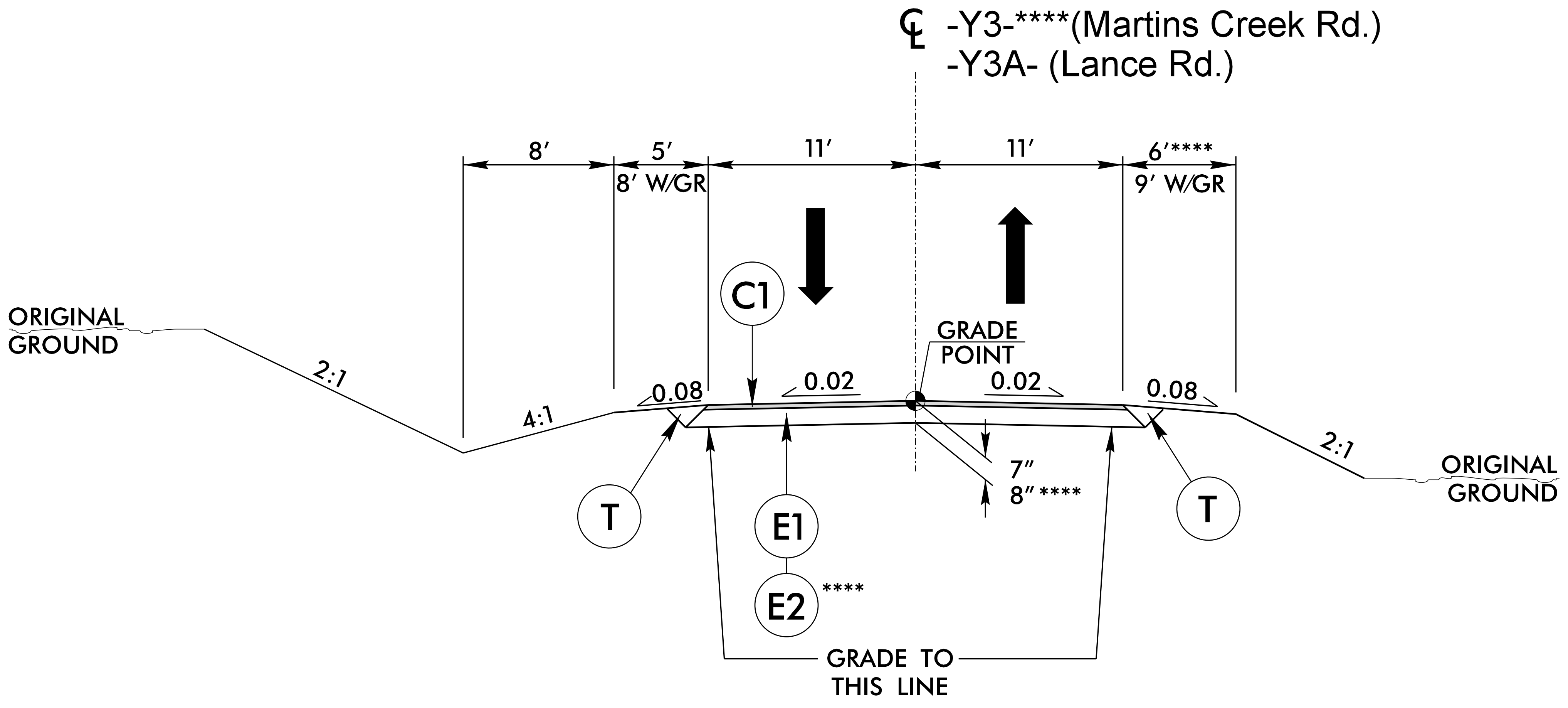

℄ -Y3-****(Martins Creek Rd.)
-Y3A- (Lance Rd.)
8'
5'
8' W/GR
11'
11'
6'****
9' W/GR
C1
GRADE POINT
ORIGINAL GROUND
2:1
4:1
0.08
0.02
0.02
0.08
2:1
ORIGINAL GROUND
7"
8"****
T
E1
E2 ****
T
GRADE TO THIS LINE

TYPICAL SECTION NO. 8

USE TYPICAL SECTION NO. 8
****-Y3- STA. 10+31.53 TO STA. 11+25.00
-Y3A- STA. 10+15.96 TO STA. 11+75.00

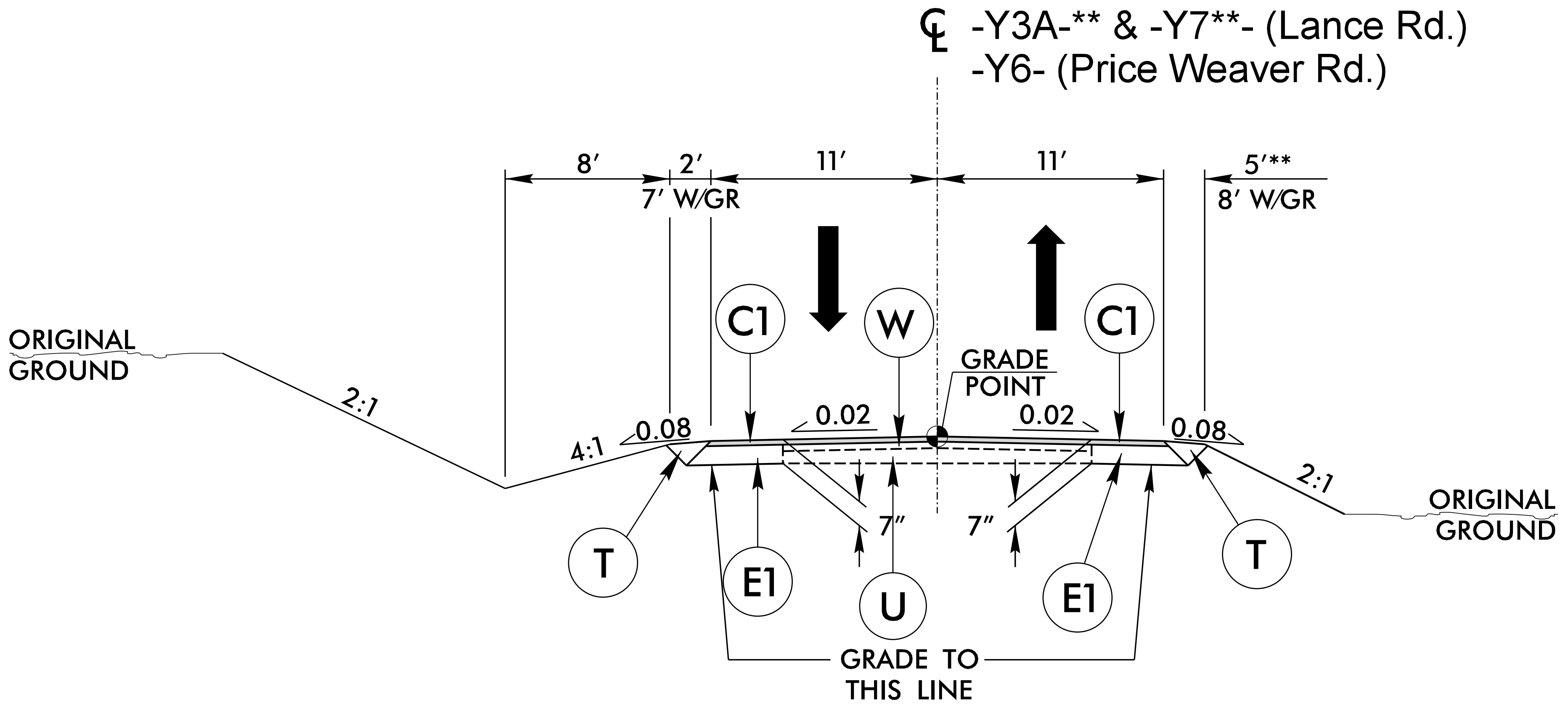

℄ -Y3A-** & -Y7**- (Lance Rd.)
-Y6- (Price Weaver Rd.)
8'
2'
7' W/GR
11'
11'
5'**
8' W/GR
C1
W
GRADE POINT
C1
ORIGINAL GROUND
2:1
4:1
0.08
0.02
0.02
0.08
2:1
ORIGINAL GROUND
7"
7"
T
E1
U
E1
T
GRADE TO THIS LINE

TYPICAL SECTION NO. 9

USE TYPICAL SECTION NO. 9
**-Y3A- STA. 11+75.00 TO STA. 12+40.00
-Y6- STA. 11+30.00 TO STA. 13+09.09
**-Y7- STA. 12+25.00 TO STA. 13+10.00

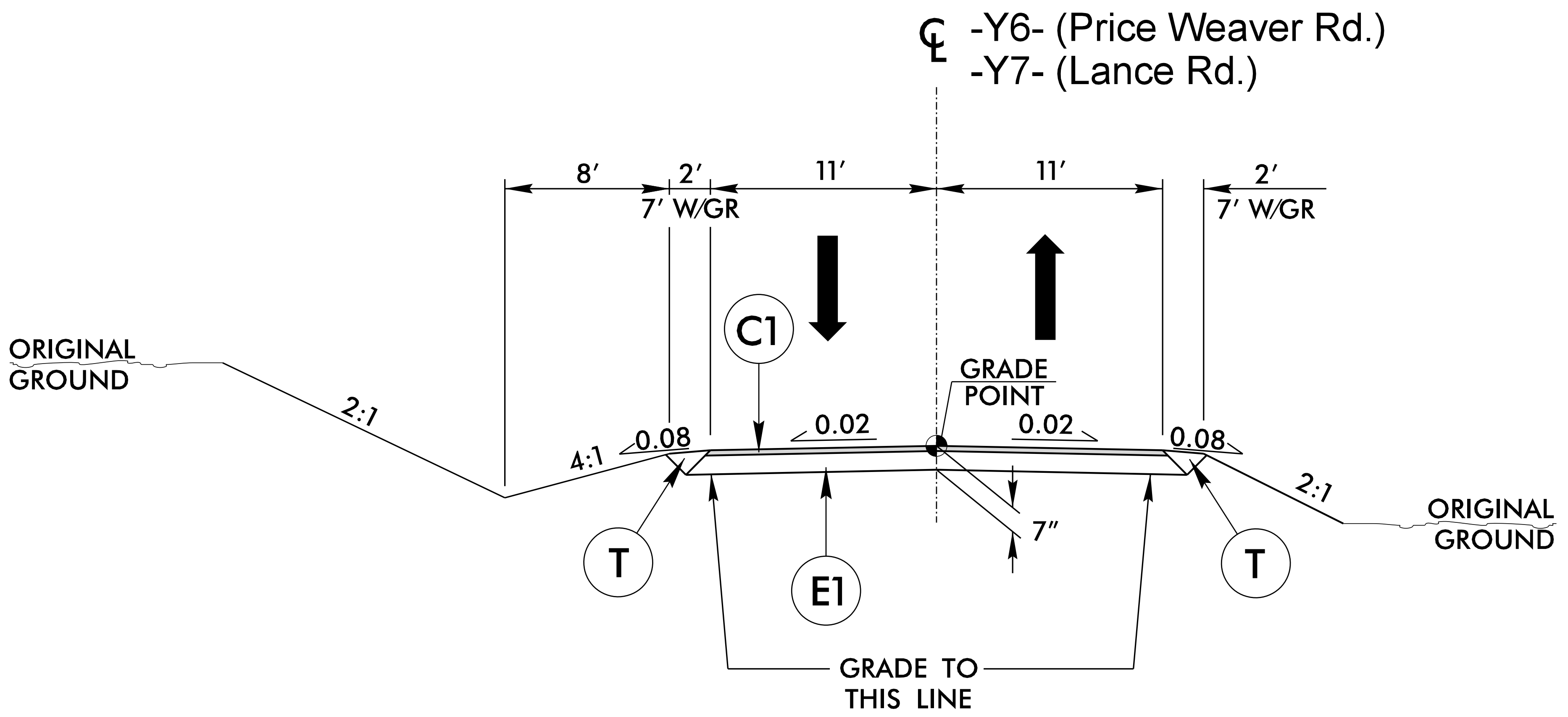

℄ -Y6- (Price Weaver Rd.)
-Y7- (Lance Rd.)
8'
2'
7' W/GR
11'
11'
2'
7' W/GR
C1
GRADE POINT
ORIGINAL GROUND
2:1
4:1
0.08
0.02
0.02
0.08
2:1
ORIGINAL GROUND
7"
T
E1
T
GRADE TO THIS LINE

TYPICAL SECTION NO. 10

USE TYPICAL SECTION NO. 10
-Y6- STA. 13+09.09 TO STA. 17+06.36
-Y7- STA. 10+17.15 TO STA. 12+25.00

NOTE: SEE PLANS FOR LOCATIONS OF CONCRETE ISLANDS, TURN LANES, AND TAPERS.

8/23/2023
R:\Roadway\Proj\R5861_Rdy_typ.dgn
jhinson

RK&K
P: (919) 878-9560
8601 Six Forks Road, Forum 1,Suite 700
Raleigh, North Carolina 27615-3960
NC License No. F-0112
Engineers | Construction Managers | Planners | Scientists
www.rkk.com
Responsive People | Creative Solutions

PROJECT REFERENCE NO.	SHEET NO.
R-5861	2A-5

ROADWAY DESIGN ENGINEER	PAVEMENT DESIGN ENGINEER
DocuSigned by: Brandon McInnis BE6912CC24204D4... SEAL 29470 BRANDON J. McINNIS 10/31/2023	DocuSigned by: Gregory Goins A40B119A1E2B43C... SEAL 041709 GREGORY K. GOINS 10/30/2023

DOCUMENT NOT CONSIDERED FINAL
UNLESS ALL SIGNATURES COMPLETED

PAVEMENT SCHEDULE

C1	3" S9.5C	R4	8"X12" CURB
C2	VAR. S9.5C	R5	VALLEY GUTTER
C3	1.5" S9.5C	T	EARTH
D1	2½" I19.0C	U	EXISTING PAVEMENT
D2	4" I19.0C	V	3" MILLING
D3	VAR. I19.0C	W	WEDGING
D4	3" I19.0C		
E1	4" B25.0C		
E2	5" B25.0C		
E3	4.5" B25.0C		
E4	VAR. B25.0C		
E5	3" B25.0C		
J1	6" ABC		
J2	8" ABC		
J3	7" ABC		
J4	VAR. ABC		
K	12" STABILIZATION		
N	GEOTEXTILE		
R1	2'-6'' C&G		
R2	SHOULDER BERM GUTTER		
R3	EXPRESSWAY		

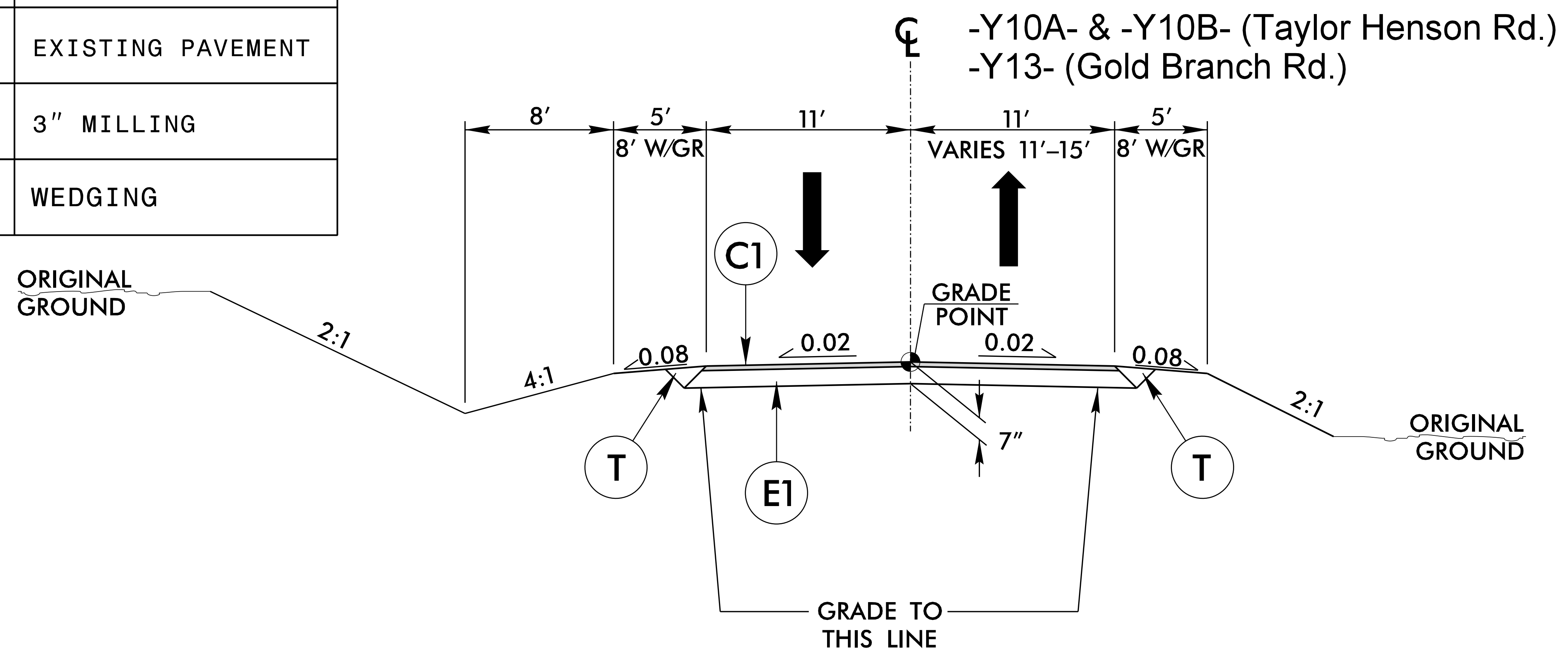
℄ -Y10A- & -Y10B- (Taylor Henson Rd.)
-Y13- (Gold Branch Rd.)
8'
5'
8' W/GR
11'
11'
VARIES 11'-15'
5'
8' W/GR
C1
ORIGINAL GROUND
GRADE POINT
2:1
4:1
0.08
0.02
0.02
0.08
2:1
ORIGINAL GROUND
7"
T
E1
T
GRADE TO THIS LINE

TYPICAL SECTION NO. 11

USE TYPICAL SECTION NO.11
–Y10A– STA. 11+00.00 TO STA. 13+88.20
–Y10B– STA. 11+86.00 TO STA. 19+08.01
–Y13– STA. 10+12.47 TO STA. 12+75.00

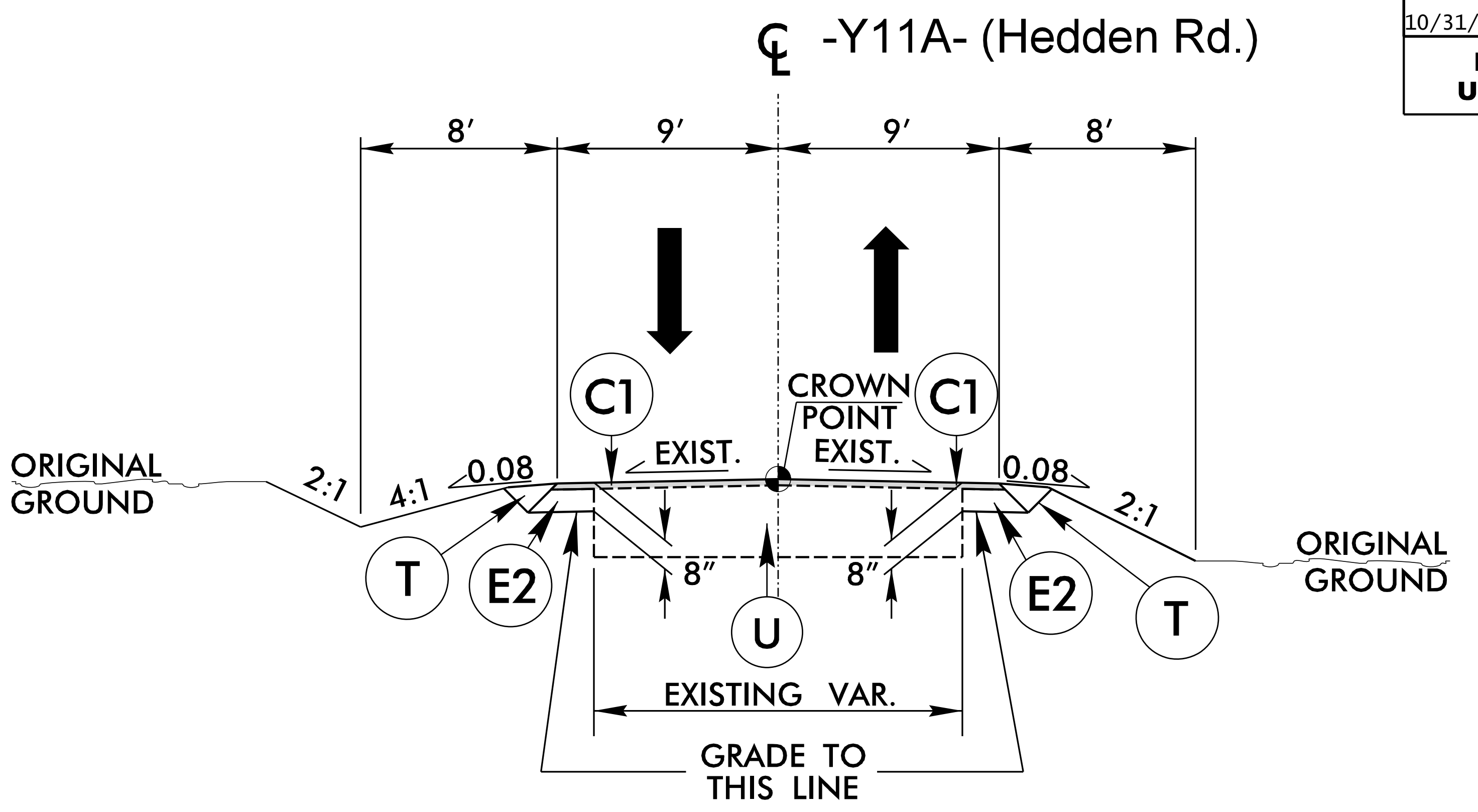
℄ -Y11A- (Hedden Rd.)
8'
9'
9'
8'
C1
CROWN POINT
C1
EXIST.
EXIST.
ORIGINAL GROUND
2:1
4:1
0.08
0.08
2:1
ORIGINAL GROUND
T
E2
8"
U
8"
E2
T
EXISTING VAR.
GRADE TO THIS LINE

TYPICAL SECTION NO.12

USE TYPICAL SECTION NO. 12
–Y11A– STA. 12+35.00 TO STA. 14+37.40

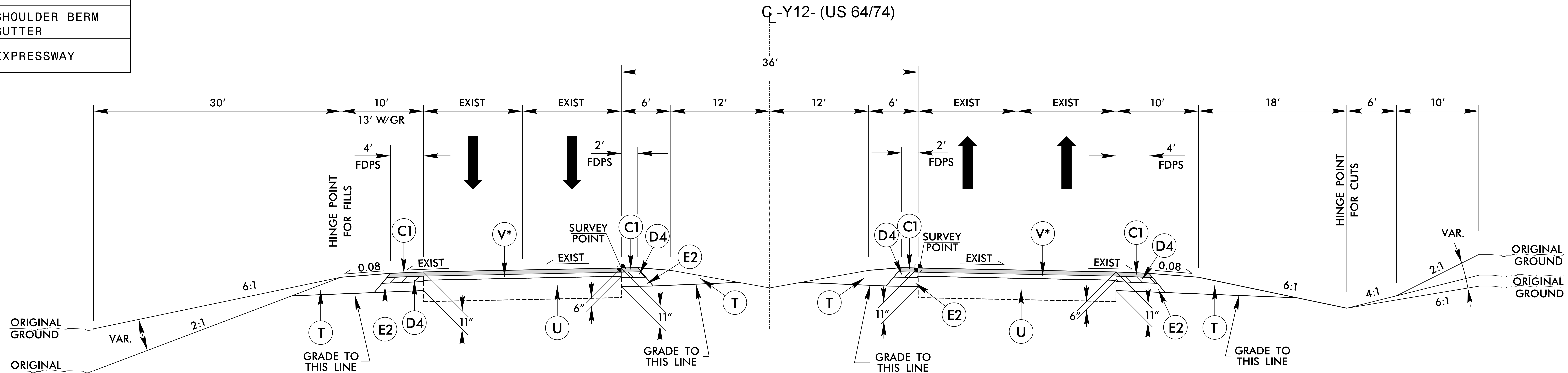
℄ -Y12- (US 64/74)
36'
30'
10'
13' W/GR
EXIST
EXIST
6'
12'
12'
6'
EXIST
EXIST
10'
18'
6'
10'
4'
FDPS
2'
FDPS
2'
FDPS
4'
FDPS
HINGE POINT FOR FILLS
HINGE POINT FOR CUTS
C1
V*
SURVEY POINT
C1
D4
E2
D4
C1
SURVEY POINT
V*
C1
D4
0.08
EXIST
EXIST
EXIST
EXIST
0.08
VAR.
6:1
6:1
2:1
4:1
2:1
6:1
ORIGINAL GROUND
ORIGINAL GROUND
ORIGINAL GROUND
ORIGINAL GROUND
VAR.
11"
6"
11"
11"
6"
11"
T
E2
D4
U
T
T
E2
U
E2
T
GRADE TO THIS LINE
GRADE TO THIS LINE
GRADE TO THIS LINE
GRADE TO THIS LINE

TYPICAL SECTION NO. 13

USE TYPICAL SECTION NO. 13
–Y12– STA. 18+66.98 TO STA. 35+00.00

*MILL 3" OF EXISTING PAVEMENT AND REPLACE WITH 3" OF S9.5C

NOTE: SEE PLANS FOR LOCATIONS OF CONCRETE ISLANDS, TURN LANES, AND TAPERS.

RK&K
P: (919) 878-9560
8601 Six Forks Road, Forum 1,Suite 700
Raleigh, North Carolina 27615-3960
NC License No. F-0112
Engineers | Construction Managers | Planners | Scientists
www.rkk.com
Responsive People | Creative Solutions

PAVEMENT SCHEDULE	
C1	3″ S9.5C
C2	VAR. S9.5C
C3	1.5″ S9.5C
D1	2½″ I19.0C
D2	4″ I19.0C
D3	VAR. I19.0C
D4	3″ I19.0C
E1	4″ B25.0C
E2	5″ B25.0C
E3	4.5″ B25.0C
E4	VAR. B25.0C
E5	3″ B25.0C
J1	6″ ABC
J2	8″ ABC
J3	7″ ABC
J4	VAR. ABC
K	12″ STABILIZATION
N	GEOTEXTILE
R1	2′-6′′ C&G
R2	SHOULDER BERM GUTTER
R3	EXPRESSWAY
R4	8″X12″ CURB
R5	VALLEY GUTTER
T	EARTH
U	EXISTING PAVEMENT
V	3″ MILLING
W	WEDGING

PROJECT REFERENCE NO.	SHEET NO.
R-5861	2A-6

ROADWAY DESIGN ENGINEER	PAVEMENT DESIGN ENGINEER
DocuSigned by: Brandon McInnis BE6912CC24204D4... BRANDON J. McINNIS 29470 10/31/2023	DocuSigned by: Gregory Goins A40B119A1E2B43C... GREGORY K. GOINS 041709 10/30/2023

DOCUMENT NOT CONSIDERED FINAL UNLESS ALL SIGNATURES COMPLETED

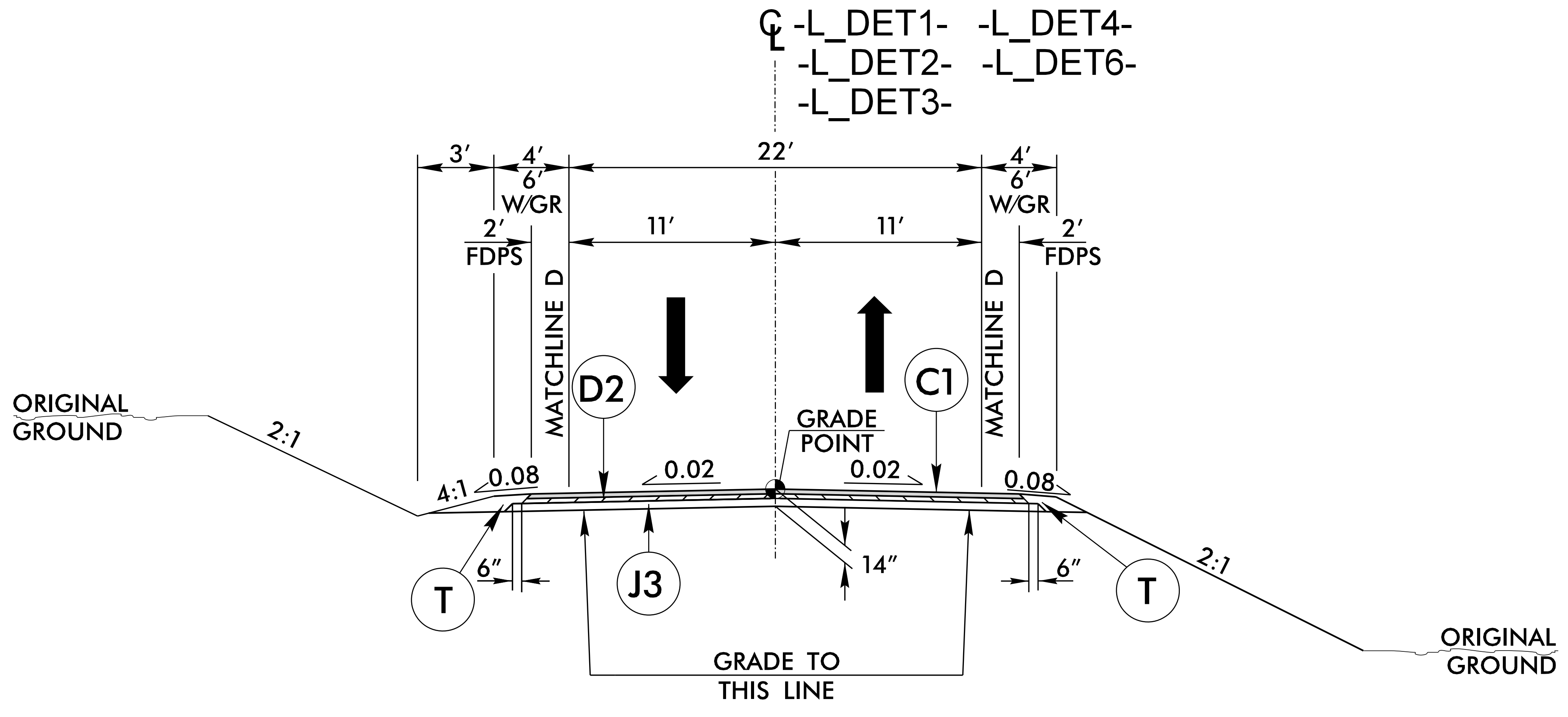
℄ -L_DET1- -L_DET4-
-L_DET2- -L_DET6-
-L_DET3-
3′
4′
6′
W/GR
22′
4′
6′
W/GR
2′
FDPS
11′
11′
2′
FDPS
MATCHLINE D
MATCHLINE D
D2
C1
ORIGINAL GROUND
2:1
4:1
0.08
0.02
GRADE POINT
0.02
0.08
6″
14″
6″
T
J3
T
2:1
GRADE TO THIS LINE
ORIGINAL GROUND

TYPICAL SECTION NO. 14

USE TYPICAL SECTION NO. 14

–L_DET1– STA. 13+25.04 TO 36+39.40
–L_DET2– STA. 14+59.99 TO 32+04.49
–L_DET3– STA. 12+40.27 TO 21+10.77
–L_DET4– STA. 12+28.80 TO 21+47.15
–L_DET4– STA. 26+35.65 TO 39+73.11
–L_DET6– STA. 13+51.69 TO 29+51.22

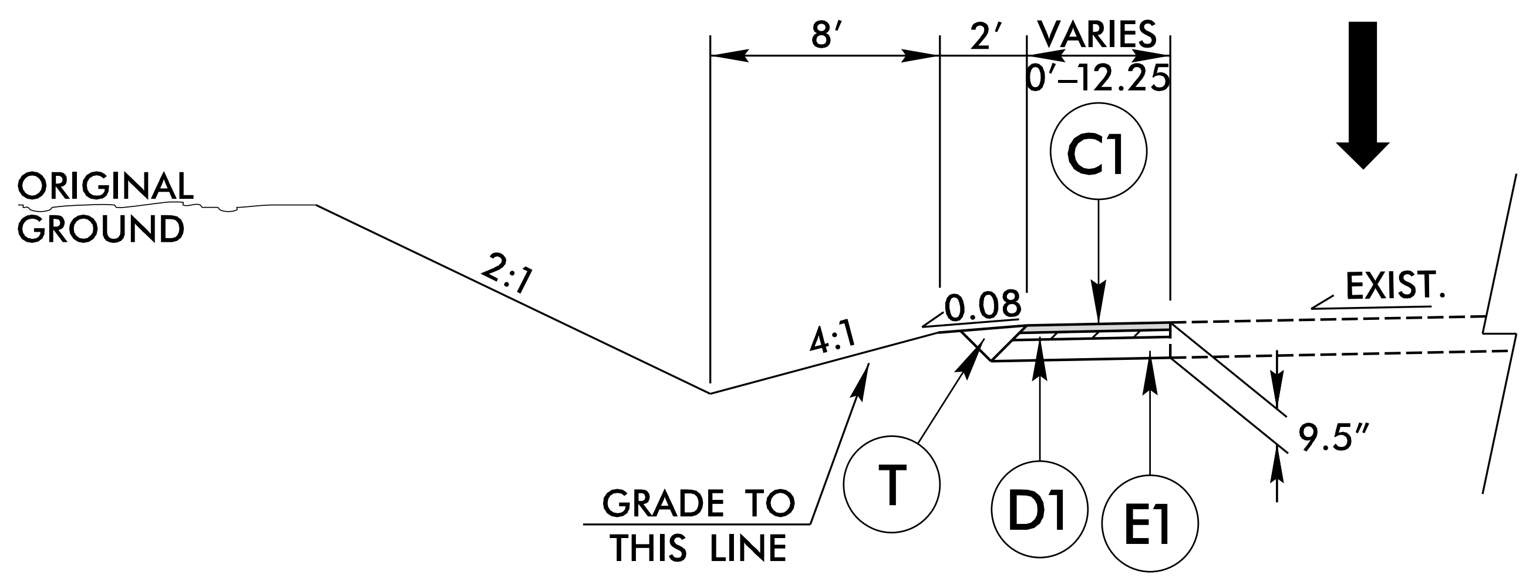
8′
2′
VARIES 0′-12.25
C1
ORIGINAL GROUND
2:1
4:1
0.08
EXIST.
9.5″
GRADE TO THIS LINE
T
D1
E1

TEMPORARY PAVEMENT WIDENING

–L– STA. 105+45.00 TO –L– STA. 108+87.00
–L– STA. 110+25.00 TO –L– STA. 122+75.00
–L– STA. 137+29.00 TO –L– STA. 143+22.00

SEE TMP PLANS FOR MORE INFORMATION.

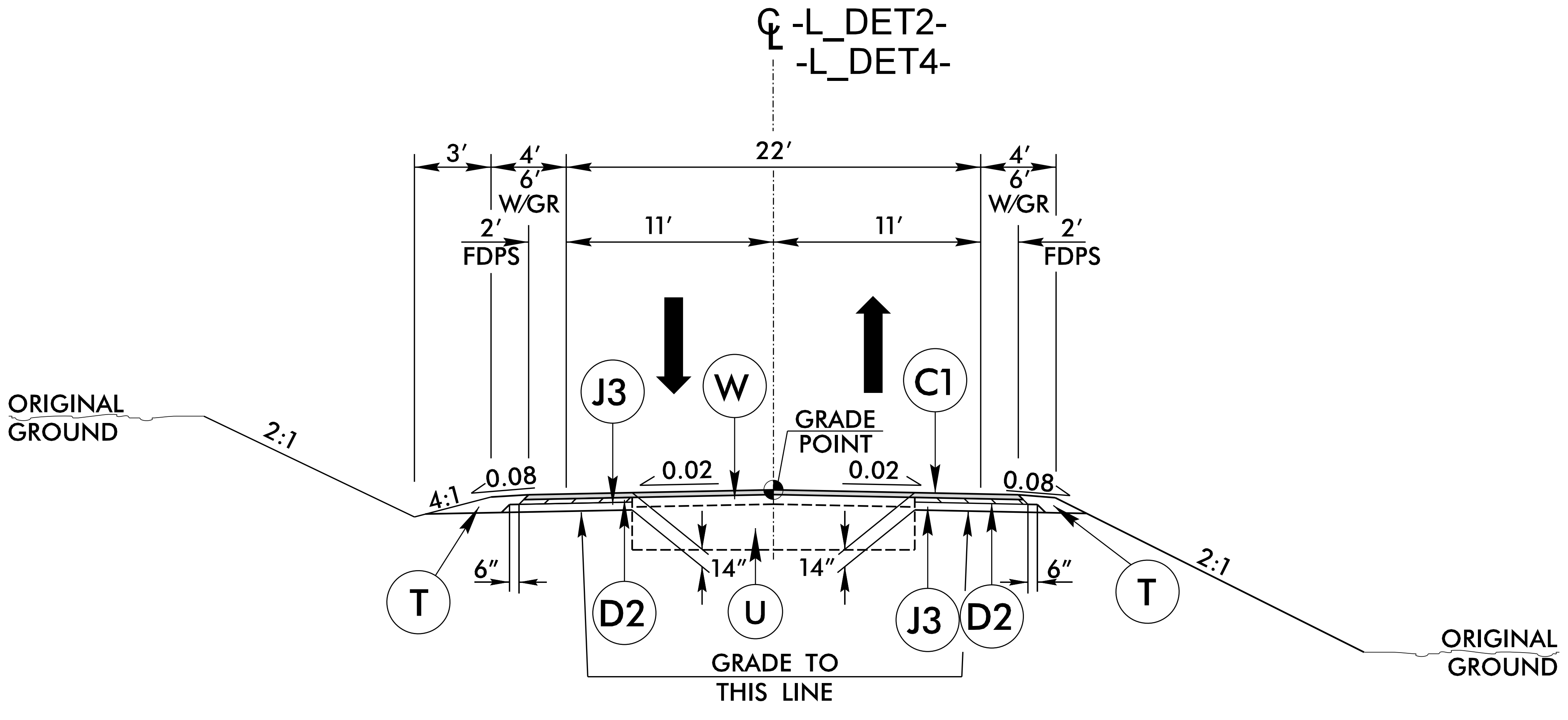
℄ -L_DET2-
-L_DET4-
3′
4′
6′
W/GR
22′
4′
6′
W/GR
2′
FDPS
11′
11′
2′
FDPS
J3
W
C1
GRADE POINT
ORIGINAL GROUND
2:1
4:1
0.08
0.02
0.02
0.08
6″
14″
14″
6″
T
D2
U
J3
D2
T
2:1
GRADE TO THIS LINE
ORIGINAL GROUND

TYPICAL SECTION NO. 15

USE TYPICAL SECTION NO. 15

–L_DET2– STA. 32+04.49 TO 37+81.97
–L_DET4– STA. 21+47.15 TO 26+35.65

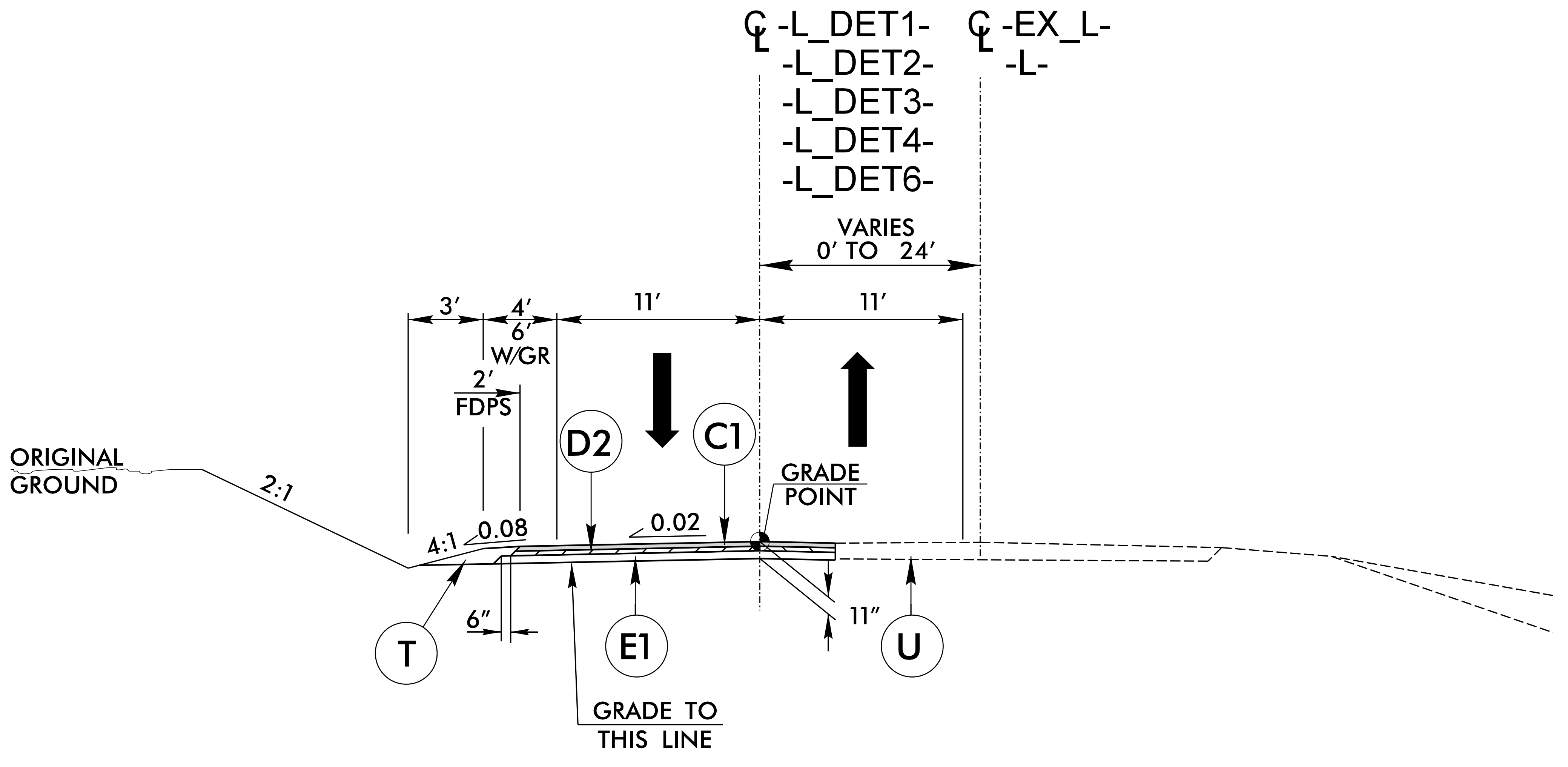
℄ -L_DET1-
-L_DET2-
-L_DET3-
-L_DET4-
-L_DET6-
℄ -EX_L-
-L-
VARIES 0′ TO 24′
3′
4′
6′
W/GR
11′
11′
2′
FDPS
D2
C1
GRADE POINT
ORIGINAL GROUND
2:1
4:1
0.08
0.02
6″
11″
T
E1
U
GRADE TO THIS LINE

TYPICAL SECTION NO. 16

USE TYPICAL SECTION NO. 16

–L_DET1– STA. 10+00.00 TO 13+25.04
–L_DET1– STA. 36+39.40 TO 40+10.78
–L_DET2– STA. 10+00.00 TO 14+59.99
–L_DET3– STA. 10+00.00 TO 12+40.27
–L_DET3– STA. 21+10.77 TO 23+05.73
–L_DET4– STA. 10+00.00 TO 12+28.80
–L_DET4– STA. 39+73.11 TO 42+98.89
–L_DET6– STA. 10+00.00 TO 13+51.69
–L_DET6– STA. 29+51.22 TO 31+46.03

RK&K
P: (919) 878-9560
8601 Six Forks Road, Forum 1,Suite 700
Raleigh, North Carolina 27615-3960
NC License No. F-0112
Engineers | Construction Managers | Planners | Scientists
www.rkk.com
Responsive People | Creative Solutions

PAVEMENT SCHEDULE	
C1	3″ S9.5C
C2	VAR. S9.5C
C3	1.5″ S9.5C
D1	2½″ I19.0C
D2	4″ I19.0C
D3	VAR. I19.0C
D4	3″ I19.0C
E1	4″ B25.0C
E2	5″ B25.0C
E3	4.5″ B25.0C
E4	VAR. B25.0C
E5	3″ B25.0C
J1	6″ ABC
J2	8″ ABC
J3	7″ ABC
J4	VAR. ABC
K	12″ STABILIZATION
N	GEOTEXTILE
R1	2′-6′′ C&G
R2	SHOULDER BERM GUTTER
R3	EXPRESSWAY
R4	8″X12″ CURB
R5	VALLEY GUTTER
T	EARTH
U	EXISTING PAVEMENT
V	3″ MILLING
W	WEDGING

PROJECT REFERENCE NO.	SHEET NO.
R-5861	2A-7

ROADWAY DESIGN ENGINEER
Brandon McInnis
BRANDON J. McINNIS
SEAL 29470
DocuSigned by:
BE6912CC24204D4...
10/31/2023

PAVEMENT DESIGN ENGINEER
Gregory Goins
GREGORY K. GOINS
SEAL 041709
DocuSigned by:
A40B119A1E2B43C...
10/30/2023

DOCUMENT NOT CONSIDERED FINAL UNLESS ALL SIGNATURES COMPLETED

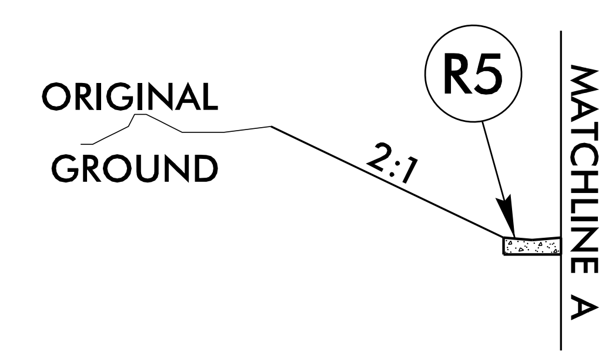
ORIGINAL GROUND
2:1
R5
MATCHLINE A

INSET E

USE WITH TYPICAL SECTION NO. 17
–DR14– STA. 11+50.00 TO STA. 12+38.00 LT

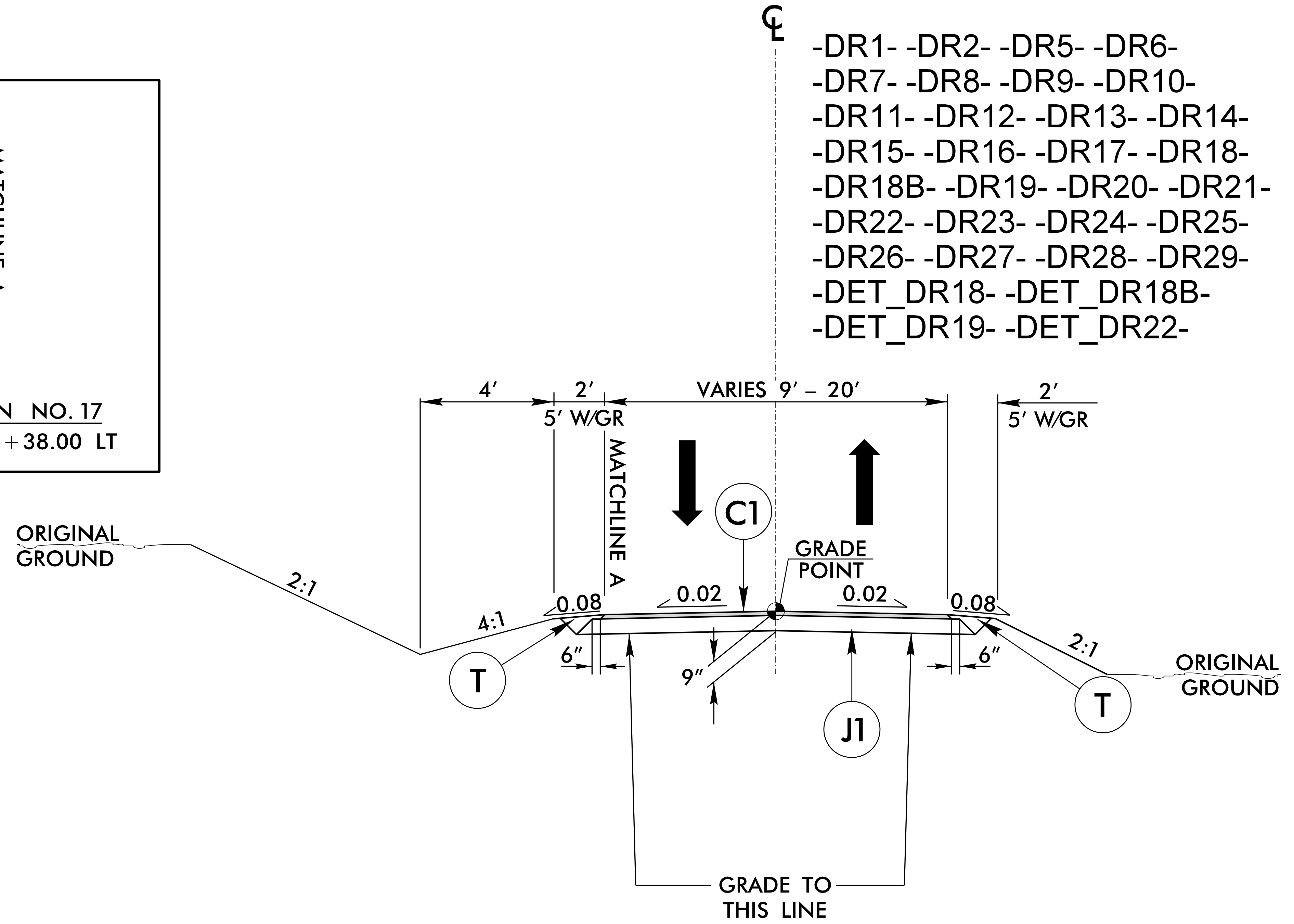
℄
-DR1- -DR2- -DR5- -DR6-
-DR7- -DR8- -DR9- -DR10-
-DR11- -DR12- -DR13- -DR14-
-DR15- -DR16- -DR17- -DR18-
-DR18B- -DR19- -DR20- -DR21-
-DR22- -DR23- -DR24- -DR25-
-DR26- -DR27- -DR28- -DR29-
-DET_DR18- -DET_DR18B-
-DET_DR19- -DET_DR22-
4′
2′
5′ W/GR
VARIES 9′ – 20′
2′
5′ W/GR
MATCHLINE A
C1
GRADE POINT
ORIGINAL GROUND
2:1
4:1
0.08
0.02
0.02
0.08
6″
9″
6″
2:1
ORIGINAL GROUND
T
J1
T
GRADE TO THIS LINE

TYPICAL SECTION NO. 17

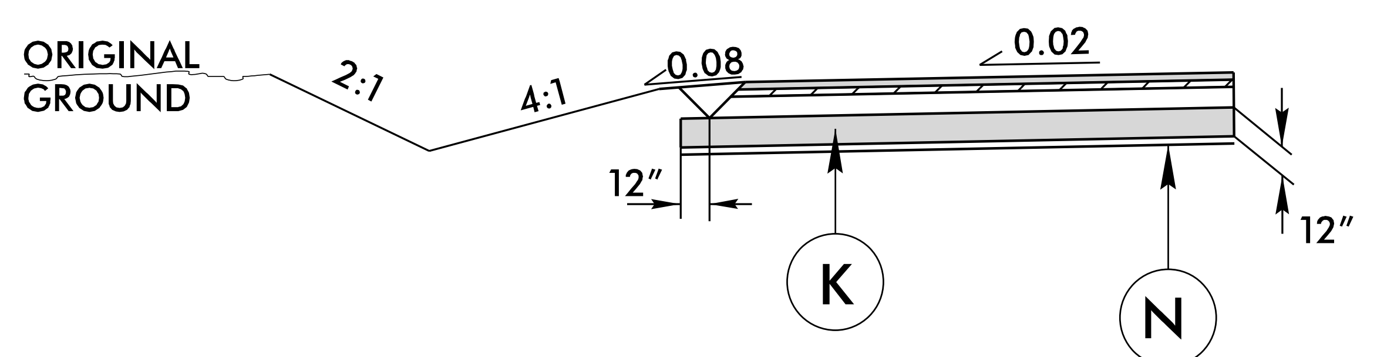
ORIGINAL GROUND
2:1
4:1
0.08
0.02
12″
12″
K
N

SHALLOW UNDERCUT DETAIL

USE WITH TYPICAL NO. 17
–DR17– STA. 10+20.00 TO STA. 11+40.00
–DR21– STA. 10+00.00 TO STA. 10+95.00

USE TYPICAL SECTION NO. 17

–DR1– STA. 9+80.00 TO STA. 11+11.20
–DR2– STA. 10+20.00 TO STA. 12+14.75
–DR5– STA. 11+20.00 TO STA. 12+45.23
–DR6– STA. 12+22.00 TO STA. 12+81.40
–DR7– STA. 10+09.43 TO STA. 10+70.25
–DR8– STA. 12+88.24 TO STA. 13+68.26
–DR9– STA. 10+10.00 TO STA. 11+72.31
–DR10– STA. 11+10.00 TO STA. 12+15.84
–DR11– STA. 10+13.88 TO STA. 10+78.61
–DR12– STA. 10+18.00 TO STA. 11+55.00
–DR13– STA. 10+11.55 TO STA. 11+40.00
–DR14– STA. 10+18.18 TO STA. 12+38.00
–DR15– STA. 10+12.00 TO STA. 13+30.00
–DR16– STA. 10+45.00 TO STA. 11+79.53
–DR17– STA. 11+14.70 TO STA. 11+48.88
–DR18– STA. 10+18.00 TO STA. 10+70.00
–DR18B– STA. 10+18.00 TO STA. 10+83.04
–DR19– STA. 10+13.46 TO STA. 11+56.91
–DR20– STA. 10+55.00 TO STA. 10+98.32
–DR21– STA. 10+00.00 TO STA. 10+94.73
–DR22– STA. 10+12.00 TO STA. 11+00.00
–DR23– STA. 10+12.00 TO STA. 11+70.00
–DR24– STA. 10+14.36 TO STA. 11+20.00
–DR25– STA. 10+05.00 TO STA. 12+29.68
–DR26– STA. 10+95.60 TO STA. 11+41.43
–DR27– STA. 10+07.58 TO STA. 11+07.14
–DR28– STA. 10+18.00 TO STA. 11+77.00
–DR29– STA. 10+15.28 TO STA. 12+01.12
–DET_DR18– STA. 10+09.97 TO STA. 10+87.00
–DET_DR18B– STA. 10+21.08 TO STA. 11+40.00
–DET_DR19– STA. 10+17.17 TO STA. 10+57.41
–DET_DR22– STA. 10+43.66 TO STA. 14+12.68

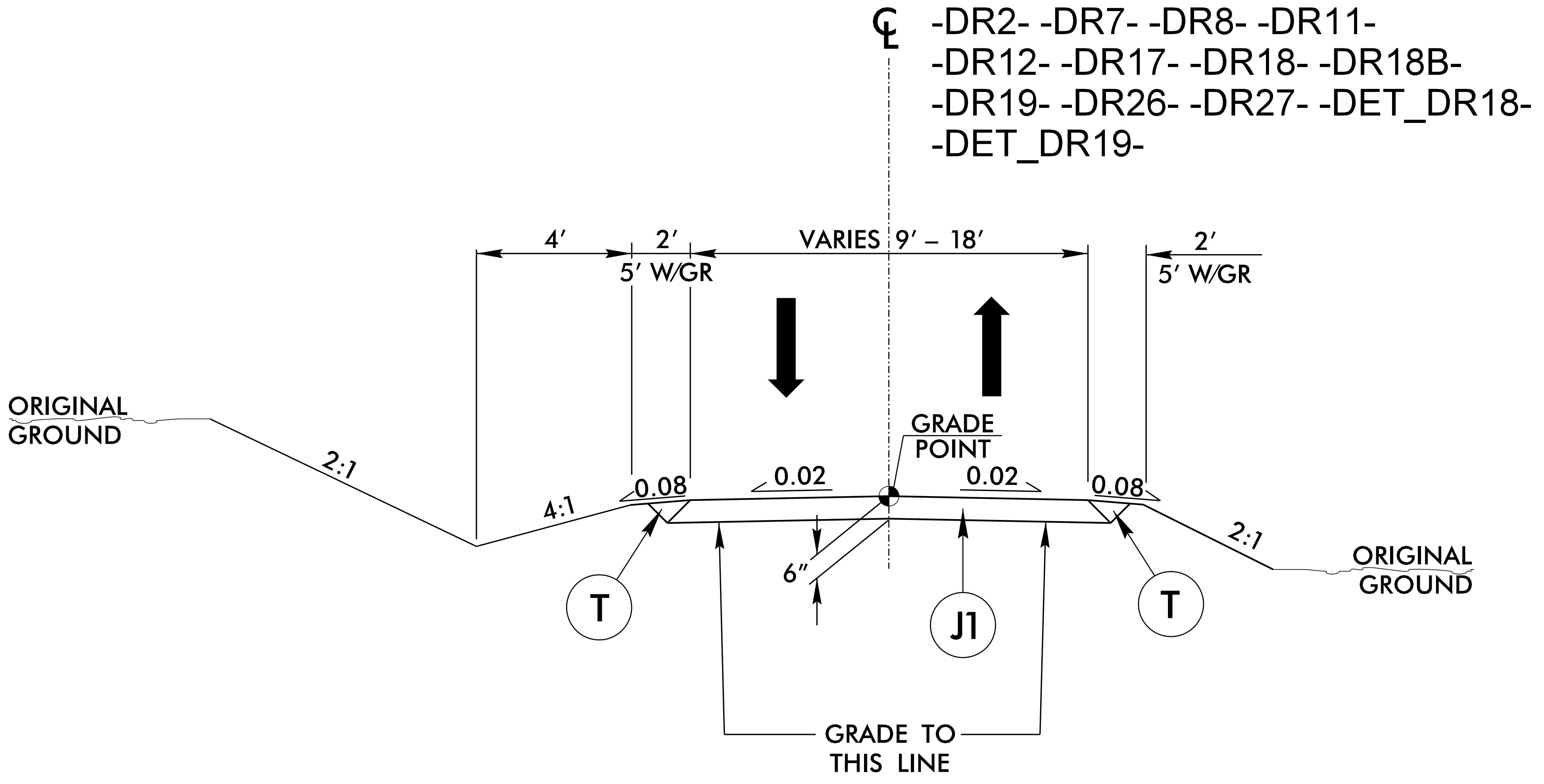
℄
-DR2- -DR7- -DR8- -DR11-
-DR12- -DR17- -DR18- -DR18B-
-DR19- -DR26- -DR27- -DET_DR18-
-DET_DR19-
4′
2′
5′ W/GR
VARIES 9′ – 18′
2′
5′ W/GR
ORIGINAL GROUND
2:1
4:1
0.08
0.02
GRADE POINT
0.02
0.08
2:1
ORIGINAL GROUND
6″
T
J1
T
GRADE TO THIS LINE

TYPICAL SECTION NO. 18

USE TYPICAL SECTION NO. 18

–DR2– STA. 12+14.75 TO STA. 12+50.00
–DR7– STA. 10+70.25 TO STA. 13+75.00
–DR8– STA. 12+00.00 TO STA. 12+88.24
–DR11– STA. 10+78.61 TO STA. 11+75.00
–DR17– STA. 10+20.00 TO STA. 11+14.70
–DR18– STA. 10+70.00 TO STA. 11+45.00
–DR18B– STA. 10+83.04 TO STA. 11+85.00
–DR19– STA. 11+56.91 TO STA. 11+75.00
–DET_DR19– STA. 10+57.41 TO STA. 11+40.00
–DR26 – STA 10+55.00 TO STA 10+95.60
–DR27 – STA 9+82.00 TO STA 10+07.58
–DET_DR18– STA. 10+87.00 TO STA. 11+40.00

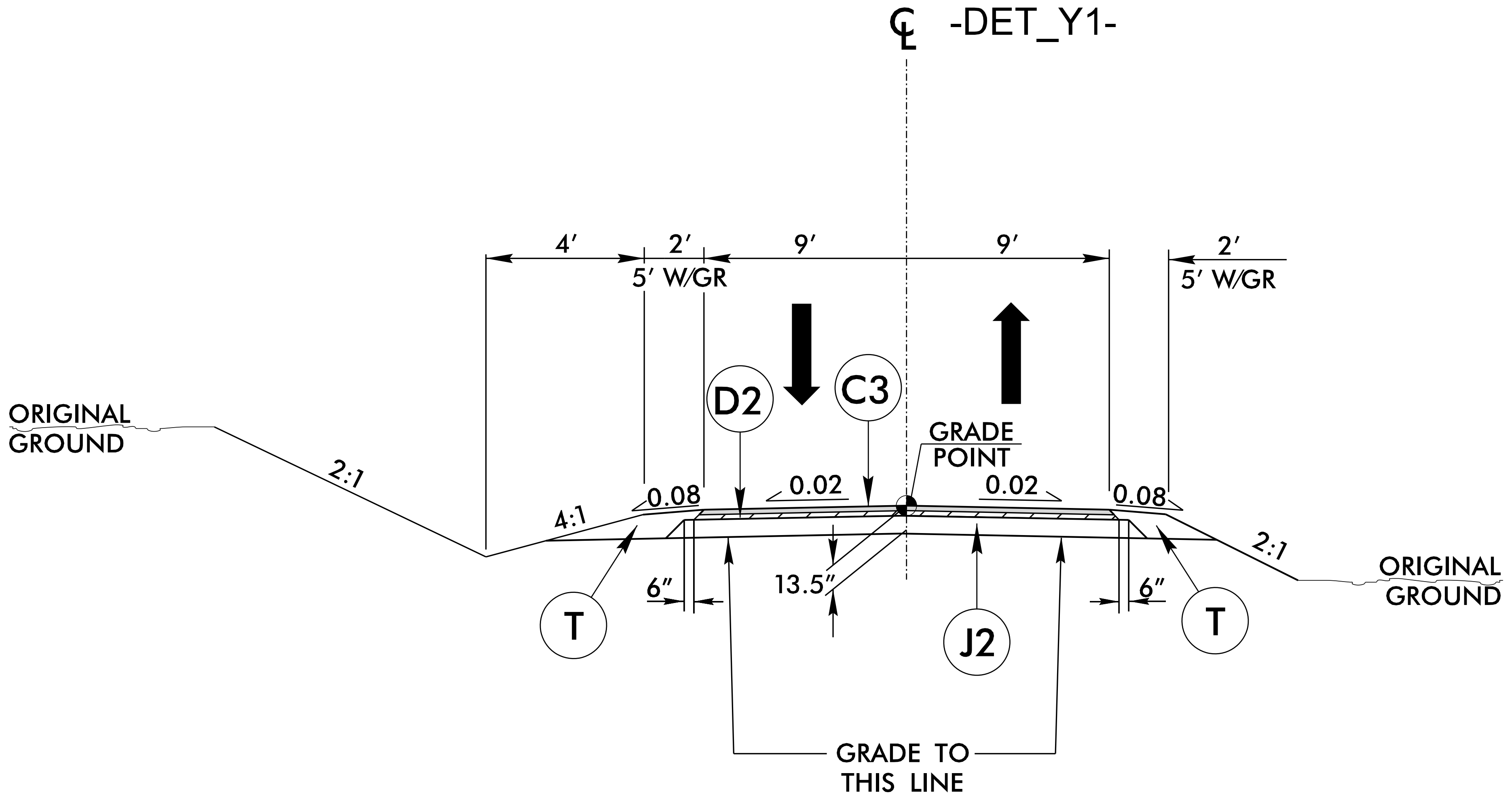
℄
-DET_Y1-
4′
2′
5′ W/GR
9′
9′
2′
5′ W/GR
D2
C3
GRADE POINT
ORIGINAL GROUND
2:1
4:1
0.08
0.02
0.02
0.08
6″
13.5″
6″
2:1
ORIGINAL GROUND
T
J2
T
GRADE TO THIS LINE

TYPICAL SECTION NO. 19

USE TYPICAL SECTION NO. 19

–DET_Y1– STA. 10+40.00 TO STA. 13+13.59

NOTE: SEE PLANS FOR LOCATIONS OF CONCRETE
ISLANDS, TURN LANES, AND TAPERS.

RK&K
P: (919) 878-9560
8601 Six Forks Road, Forum 1,Suite 700
Raleigh, North Carolina 27615-3960
NC License No. F-0112
Engineers | Construction Managers | Planners | Scientists
www.rkk.com
Responsive People | Creative Solutions

8/17/99

-L_DET1-

PROJECT REFERENCE NO.	SHEET NO.
R-5861	2B-1

R/W SHEET NO.

ROADWAY DESIGN ENGINEER	HYDRAULICS ENGINEER
DocuSigned by: Brandon McInnis BE6912CC24204D4... SEAL 29470 BRANDON J. McINNIS 10/31/2023	DocuSigned by: Alexis Burke 08E52EF5827E423... SEAL 46155 ALEXIS S. BURKE 10/30/2023

DOCUMENT NOT CONSIDERED FINAL UNLESS ALL SIGNATURES COMPLETED

NAD 83/2011

-L_DET1-

PI Sta 11+93.13	PI Sta 14+78.25
Δ = 26° 02′ 45.8″ (LT)	Δ = 13° 30′ 33.5″ (RT)
D = 6° 51′ 57.2″	D = 6° 51′ 57.2″
L = 379.36′	L = 196.76′
T = 193.13′	T = 98.90′
R = 835.00′	R = 835.00′
SE=0.06	SE=0.06
RO = 140	RO = 140
DS = 50 MPH	DS = 50 MPH

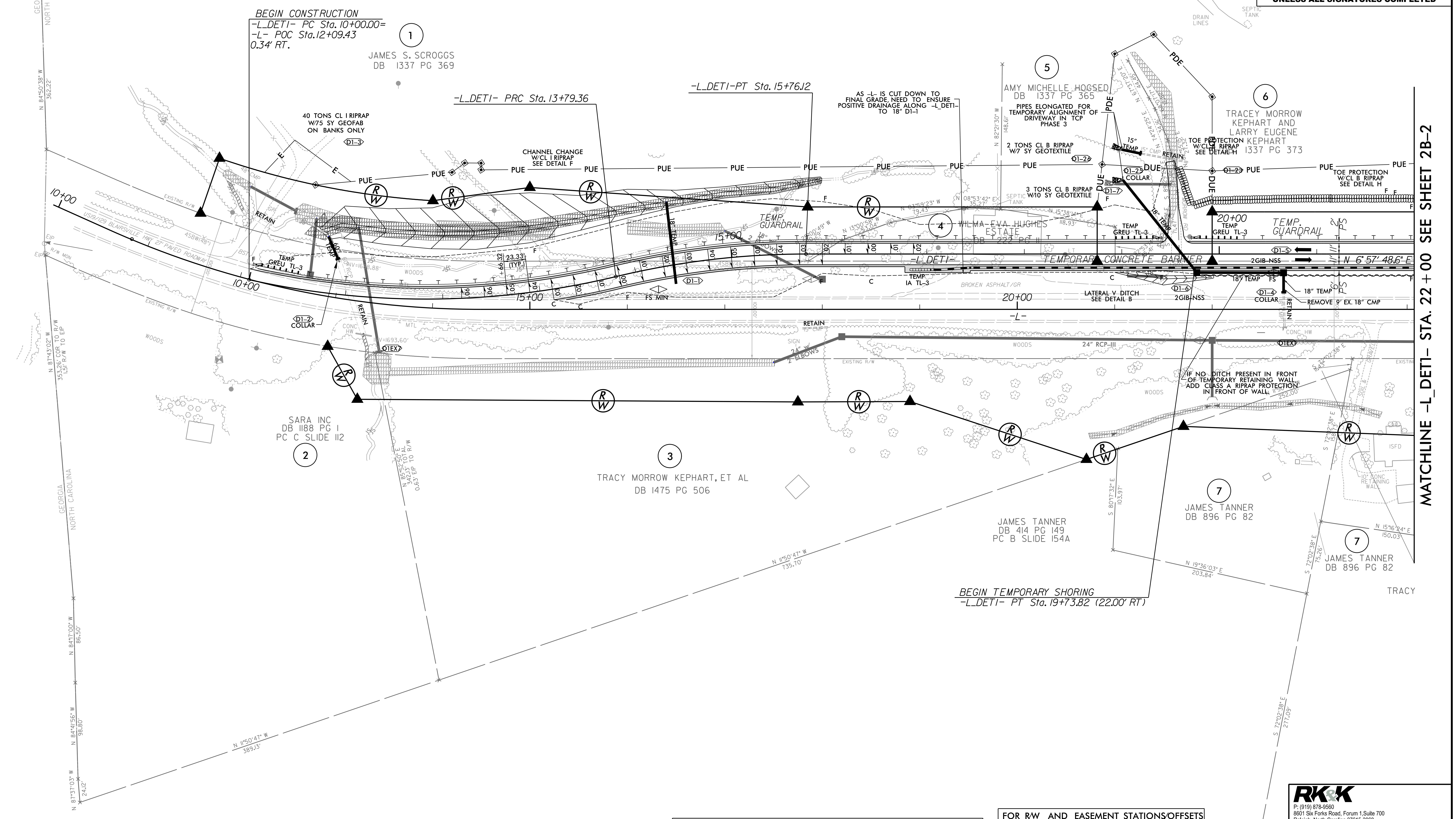
BEGIN CONSTRUCTION
-L_DET1- PC Sta. 10+00.00=
-L- POC Sta.12+09.43
0.34′ RT.
1
JAMES S. SCROGGS
DB 1337 PG 369
-L_DET1- PRC Sta. 13+79.36
-L_DET1-PT Sta. 15+76.12
40 TONS CL I RIPRAP
W/75 SY GEOFAB
ON BANKS ONLY
D1-3
CHANNEL CHANGE
W/CL I RIPRAP
SEE DETAIL F
AS -L- IS CUT DOWN TO
FINAL GRADE, NEED TO ENSURE
POSITIVE DRAINAGE ALONG -L_DET1-
TO 18″ D1-1
5
AMY MICHELLE HOGSED
DB 1337 PG 365
PIPES ELONGATED FOR
TEMPORARY ALIGNMENT OF
DRIVEWAY IN TCP
PHASE 3
2 TONS CL B RIPRAP
W/7 SY GEOTEXTILE
D1-26
3 TONS CL B RIPRAP
W/10 SY GEOTEXTILE
D1-7
D1-25
COLLAR
15″ TEMP
RETAIN
PDE
DUE
6
TRACEY MORROW
KEPHART AND
LARRY EUGENE
KEPHART
DB 1337 PG 373
TOE PROTECTION
W/CL B RIPRAP
SEE DETAIL H
D1-23
PUE
R/W
E
10+00
15+00
20+00
RETAIN
TEMP GREU TL-3
60″ TEMP
INV=1688.88′
WOODS
23.33′ (TYP.)
+66.32
18″ TEMP
D1-1
FS MIN
TEMP. GUARDRAIL
18″ 2 ELBOWS
4
WILMA EVA HUGHES
ESTATE
DB 222 PG II
SEPTIC TANK
DRAIN LINES
N 82°21′30″ W 148.61′
N 08°53′42″ E 35.27′
N 03°59′23″ W 79.43′
N 13°00′58″ W 53.04′
N 15°38′14″ E 118.93′
N 25°00′49″ W
-L_DET1-
TEMPORARY CONCRETE BARRIER
TEMP IA TL-3
BROKEN ASPHALT/GR
LATERAL V DITCH
SEE DETAIL B
D1-6
2GIB-NSS
D1-5
D1-4
COLLAR
18″ TEMP
FS
REMOVE 9′ EX. 18″ CMP
N 6° 57′ 48.6″ E
2′ PS
11′
6′ PS
-L-
US 19/129 BLAIRSVILLE HWY 27′ PAVED ROADWAY
EXISTING R/W
D1-2
COLLAR
CONC HW
INV=1693.60′
D1EX7
MTL
RETAIN
15″ CMP
SIGN
24″ W/ 2 ELBOWS
24″ RCP-III
D1EX1
CONC HW
IF NO DITCH PRESENT IN FRONT
OF TEMPORARY RETAINING WALL,
ADD CLASS A RIPRAP PROTECTION
IN FRONT OF WALL.
SARA INC
DB 1188 PG 1
PC C SLIDE 112
2
3
TRACY MORROW KEPHART, ET AL
DB 1475 PG 506
JAMES TANNER
DB 414 PG 149
PC B SLIDE 154A
7
JAMES TANNER
DB 896 PG 82
7
JAMES TANNER
DB 896 PG 82
TRACY
BEGIN TEMPORARY SHORING
-L_DET1- PT Sta. 19+73.82 (22.00′ RT)
N 11°50′47″ W 735.70′
N 11°50′47″ W 389.13′
N 19°36′03″ E 203.84′
S 80°17′32″ E 103.97′
N 15°16′24″ E 150.03
S 72°02′38″ E
GEORGIA
NORTH CAROLINA
N 84°50′38″ W 362.22′
N 87°43′02″ W
N 84°17′00″ W 86.50′
N 84°41′56″ W 98.80′
N 87°37′03″ W 24.12′
ISFD
10′ CONC RETAINING WALL
MATCHLINE -L_DET1- STA. 22+00 SEE SHEET 2B-2

NOTES:
ALL DRIVES ARE 16′ WIDE WITH 10′ RADII UNLESS OTHERWISE NOTED.
ALL DETOURS WILL BE REMOVED.

■—■	TEMPORARY DRAINAGE /PERMANENT DRAINAGE TO BE UTILIZED WHILE THE TEMPORARY DETOUR IS IN PLACE.
▨—▨	PROPOSED DRAINAGE FOR FINAL CONDITION.

FOR R/W AND EASEMENT STATIONS/OFFSETS SEE SHTS. 4 & 5

FOR DITCH DETAILS SEE SHTS. 2D-1 & 2D-2
FOR -L_DET1- PROFILE SEE SHT. 38
FOR TRAFFIC CONTROL PLANS SEE SHTS. TMP-1 THRU TMP-56

RK&K
P: (919) 878-9560
8601 Six Forks Road, Forum 1,Suite 700
Raleigh, North Carolina 27615-3960
NC License No. F-0112
Engineers | Construction Managers | Planners | Scientists
www.rkk.com
Responsive People | Creative Solutions

8/25/2023
R:\Roadway\Proj\R5861_Rdy_dsn_DET_1_psh2B-1.dgn

-L_DET1-

PROJECT REFERENCE NO.	SHEET NO.
R-5861	2B-2
R/W SHEET NO.	

ROADWAY DESIGN ENGINEER	HYDRAULICS ENGINEER
DocuSigned by: Brandon McInnis BE6912CC24204D4... SEAL 29470 BRANDON J. McINNIS 10/31/2023	DocuSigned by: Alexis Burke 06E52EF5827E423... SEAL 46155 ALEXIS S. BURKE 10/30/2023

DOCUMENT NOT CONSIDERED FINAL UNLESS ALL SIGNATURES COMPLETED

-L_DET1-	-DET_Y1-
PI Sta 33+73.45	PI Sta 12+46.36
Δ = 25° 40′ 02.9″ (LT)	Δ = 76° 08′ 01.5″ (LT)
D = 1° 58′ 45.2″	D = 38° 56′ 32.8″
L = 1,296.84′	L = 195.50′
T = 659.52′	T = 117.48′
R = 2,895.00′	R = 150.00′
SE=0.04	SE=0.04
RO = 90′	RO = 90′
DS = 50 MPH	DS = 25 MPH

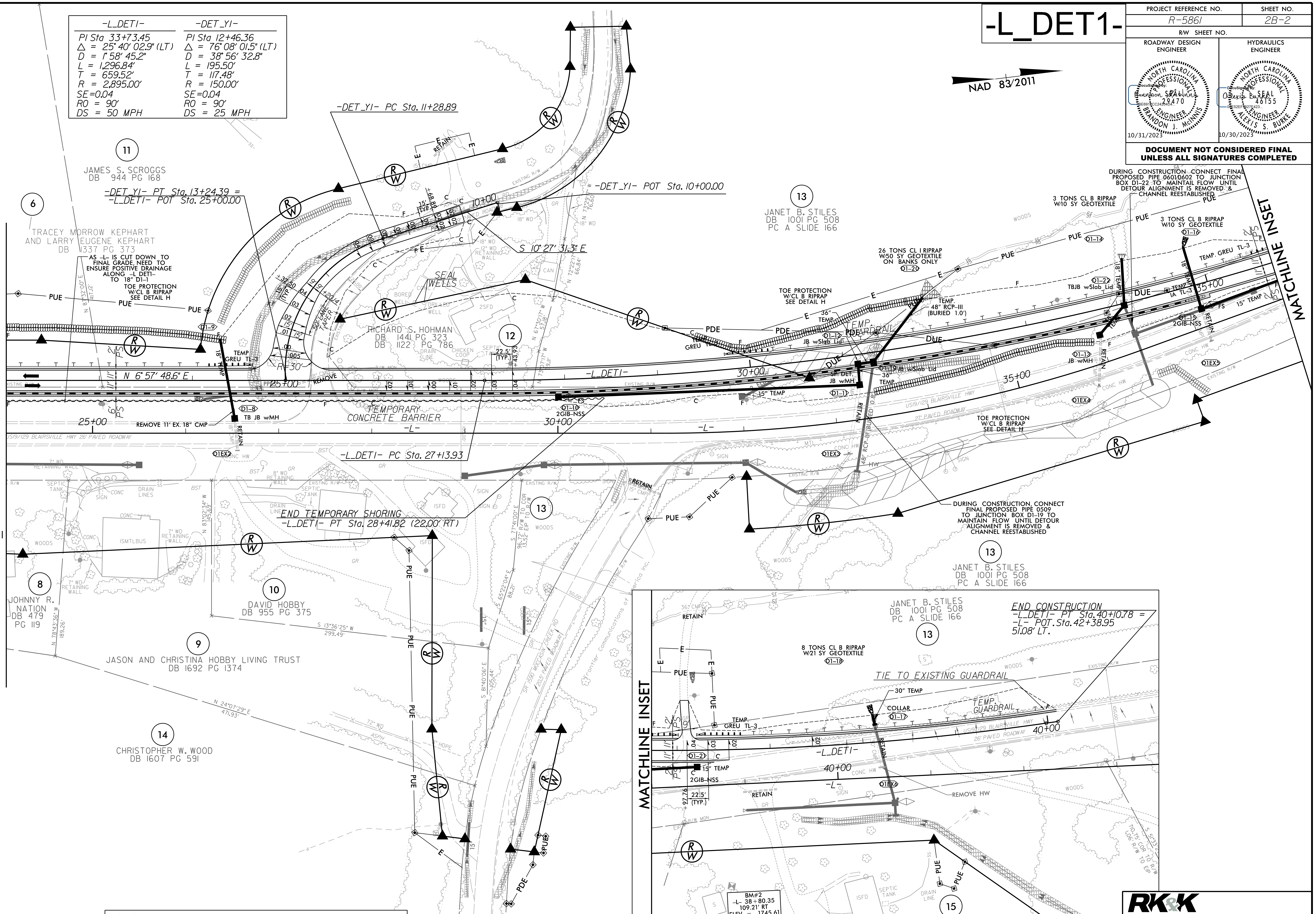
NAD 83/2011
MATCHLINE -L_DET1- STA. 22+00 SEE SHEET 2B-1
MATCHLINE INSET
11
JAMES S. SCROGGS
DB 944 PG 168
6
TRACEY MORROW KEPHART
AND LARRY EUGENE KEPHART
DB 1337 PG 373
-DET_Y1- PC Sta. 11+28.89
-DET_Y1- PT Sta. 13+24.39 =
-L_DET1- POT Sta. 25+00.00
-DET_Y1- POT Sta. 10+00.00
S 10° 27′ 31.3″ E
AS -L- IS CUT DOWN TO FINAL GRADE, NEED TO ENSURE POSITIVE DRAINAGE ALONG -L DET1- TO 18″ D1-1
TOE PROTECTION W/CL B RIPRAP SEE DETAIL H
PUE
R/W
D1-9
18″ TEMP
TEMP GREU TL-3
N 6° 57′ 48.6″ E
N 87°32′00″ E 417.12′
2′ PS
11′ 11′
6′ PS
25+00
REMOVE 11′ EX. 18″ CMP
D1-8
TB JB w/MH
RETAIN
18″ CMP
US19/129 BLAIRSVILLE HWY 26′ PAVED ROADWAY
D1EX2
CONC HW
15′ (TYP.)
50′ LANE TAPER
R=30′
REMOVE
18″ CMP
SEAL WELLS
BORED WELL
DRILLED WELL
RICHARD S. HOHMAN
DB 1441 PG 323
DB 1122 PG 786
2SFD
CHICKEN COOP
SEPTIC TANK
DRAIN LINE
12
22.5′ (TYP.)
+43.93
TEMPORARY CONCRETE BARRIER
-L-
-L_DET1-
30+00
D1-10
2GIB-NSS
ES
-L_DET1- PC Sta. 27+13.93
END TEMPORARY SHORING
-L_DET1- PT Sta. 28+41.82 (22.00′ RT)
CAN
12″ WD RETAINING WALL
18″ WD
N 73°29′17″ W 76.60′
N 72°22′17″ W 66.84′
N 67°30′17″ W 57.18′
N 73°07′17″ W
13
JANET B. STILES
DB 1001 PG 508
PC A SLIDE 166
PDE
E
F
C
DUE
36″ TEMP
TEMP. GUARDRAIL
D1-12
JB w/Slab Lid
TEMP. 48″ RCP-III (BURIED 1.0′)
26 TONS CL I RIPRAP W/50 SY GEOTEXTILE ON BANKS ONLY
D1-20
D1-19 JB w/Slab Lid
SP. DET. JB w/MH
D1-11
15″ TEMP
48″ RCP-III (BURIED 0.8′)
HW
D1EX3
MTL
CONC HW
SIGN
EXISTING R/W
35+00
DURING CONSTRUCTION CONNECT FINAL PROPOSED PIPE 0601/0602 TO JUNCTION BOX D1-22 TO MAINTAIL FLOW UNTIL DETOUR ALIGNMENT IS REMOVED & CHANNEL REESTABLISHED
3 TONS CL B RIPRAP W/10 SY GEOTEXTILE
D1-14
D1-16
D1-22
TBJB w/Slab Lid
18″ TEMP
TEMP. GREU TL-3
TEMP IA TL-3
D1-13
JB w/MH
D1-15
2GIB-NSS
FS
D1EX4
D1EX5
US19/129 BLAIRSVILLE HWY
27′ PAVED ROADWAY
TOE PROTECTION W/CL B RIPRAP SEE DETAIL H
WOODS
DURING CONSTRUCTION CONNECT FINAL PROPOSED PIPE 0509 TO JUNCTION BOX D1-19 TO MAINTAIN FLOW UNTIL DETOUR ALIGNMENT IS REMOVED & CHANNEL REESTABLISHED
7″ WD RETAINING WALL
SEPTIC TANK
DRAIN LINES
ISMTLBUS
8″ WD RETAINING WALL
ISFD
BST
GR
N 83°02′34″ W 145.69′
8
JOHNNY R. NATION
DB 479
PG 119
N 78°43′36″ W 189.26′
10
DAVID HOBBY
DB 955 PG 375
S 13°36′25″ W 299.49′
9
JASON AND CHRISTINA HOBBY LIVING TRUST
DB 1692 PG 1374
N 24°07′29″ E 471.93′
14
CHRISTOPHER W. WOOD
DB 1607 PG 591
72″ WD
ASPH
8″ HDPE
S 77°41′00″ E 96.72′ R/W TO COR 13.52′ EIP TO R/W
S 65°22′04″ E 88.21′
S 81°40′06″ E 105.44′
SR 1590 MOCCASIN CREEK RD 20.5′ PAVED ROADWAY
Frontier Communications of America Inc.
50.00′
15″
36″ CMP
RETAIN
8 TONS CL B RIPRAP W/21 SY GEOTEXTILE
D1-18
END CONSTRUCTION
-L_DET1- PT Sta. 40+10.78 =
-L- POT. Sta. 42+38.95
51.08′ LT.
TIE TO EXISTING GUARDRAIL
30″ TEMP
COLLAR
D1-17
TEMP. GUARDRAIL
40+00
D1-2
2GIB-NSS
+97.76
D1EX6
REMOVE HW
R/W MON
EIP
710.75′ COR TO R/W
1.06′ R/W TO EIP
S 51°33′
BM#2
-L- 38+80.35
109.21′ RT
ELEV. = 1745.61
15
MURPHY HIGHWAY LLC
DB 1325 PG 30

NOTES:
ALL DRIVES ARE 16′ WIDE WITH 10′ RADII UNLESS OTHERWISE NOTED.
ALL DETOURS WILL BE REMOVED.

■—■	TEMPORARY DRAINAGE /PERMANENT DRAINAGE TO BE UTILIZED WHILE THE TEMPORARY DETOUR IS IN PLACE.
▪—▪	PROPOSED DRAINAGE FOR FINAL CONDITION.

FOR R/W AND EASEMENT STATION/OFFSETS SEE SHTS. 5 AND 6.

FOR DITCH DETAILS SEE SHT. 2D-1 & 2D-2
FOR -L_DET1- PROFILE SEE SHT. 38
FOR -DET_Y1- PROFILE SEE SHT. 42
FOR TRAFFIC CONTROL PLANS SEE SHT. TMP-1 THRU TMP-56

RK&K
P: (919) 878-9560
8601 Six Forks Road, Forum 1,Suite 700
Raleigh, North Carolina 27615-3960
NC License No. F-0112
Engineers | Construction Managers | Planners | Scientists
www.rkk.com
Responsive People | Creative Solutions

-L_DET2-

PROJECT REFERENCE NO.	SHEET NO.
R-5861	2B-3
R/W SHEET NO.	

ROADWAY DESIGN ENGINEER	HYDRAULICS ENGINEER
DocuSigned by: Brandon J. McInnis BE6912CC24204D4... SEAL 29470 BRANDON J. McINNIS 10/31/2023	DocuSigned by: Alexis Burke 08E52EF5827E423... SEAL 46155 ALEXIS S. BURKE 10/30/2023

DOCUMENT NOT CONSIDERED FINAL UNLESS ALL SIGNATURES COMPLETED

-L_DET2-
PI Sta 14+81.47
△ = 14° 44′ 57.3″ (RT)
D = 1° 32′ 24.8″
L = 957.61′
T = 481.47′
R = 3,720.00′
SE = 0.03
RO = 70
DS = 50 MPH

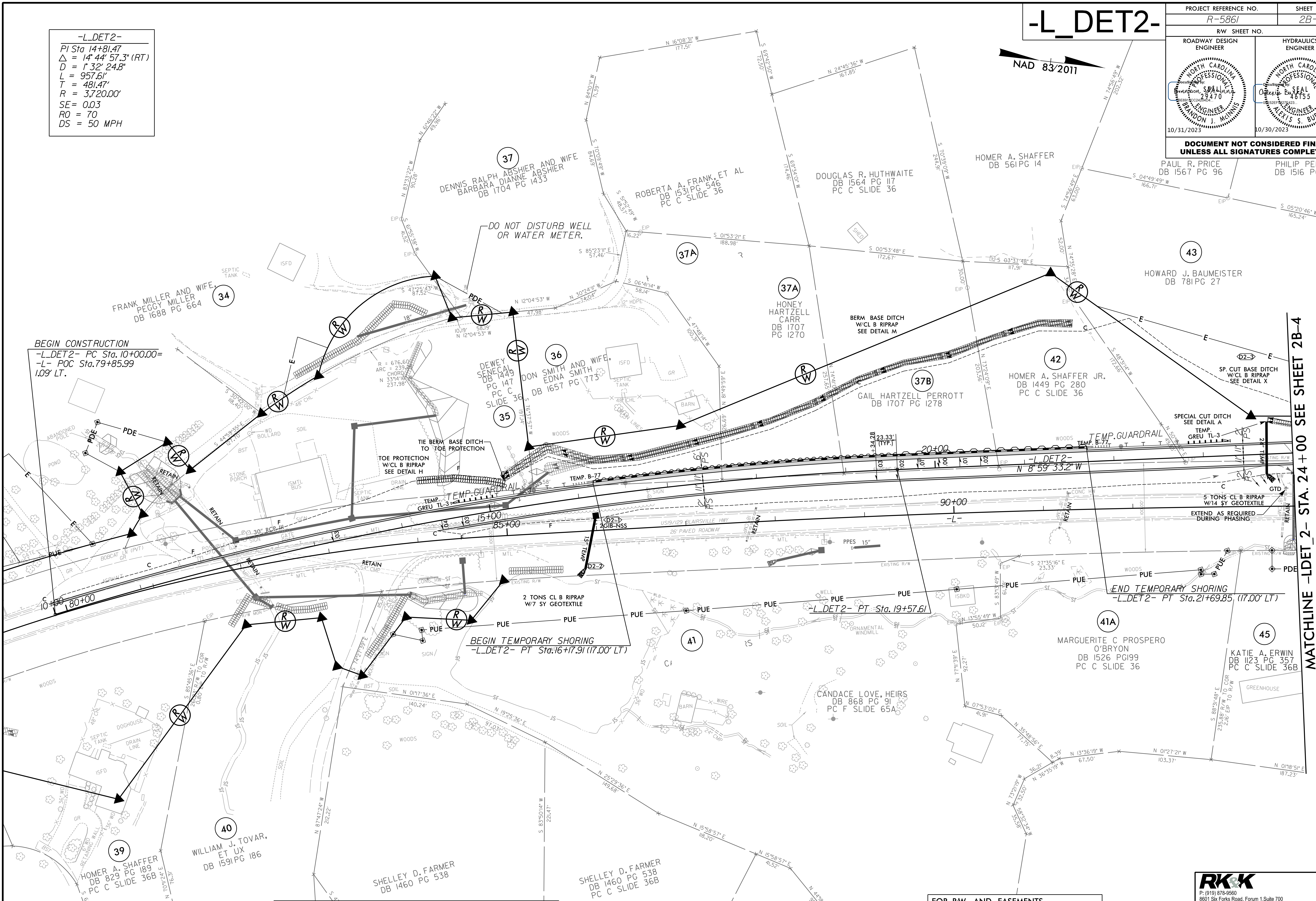
NAD 83/2011
DENNIS RALPH ABSHIER AND WIFE BARBARA DIANNE ABSHIER DB 1704 PG 1433 (37)
ROBERTA A. FRANK, ET AL DB 1531 PG 546 PC C SLIDE 36
DOUGLAS R. HUTHWAITE DB 1564 PG 117 PC C SLIDE 36
HOMER A. SHAFFER DB 561 PG 14
PAUL R. PRICE DB 1567 PG 96
PHILIP PERLOW DB 1516 PG 148
HOWARD J. BAUMEISTER DB 781 PG 27 (43)
FRANK MILLER AND WIFE, PEGGY MILLER DB 1688 PG 664 (34)
DO NOT DISTURB WELL OR WATER METER.
(37A) HONEY HARTZELL CARR DB 1707 PG 1270
BERM BASE DITCH W/CL B RIPRAP SEE DETAIL M
DEWEY SENECAL DB 1449 PG 147 PC C SLIDE 36 (35)
(36) DON SMITH AND WIFE, EDNA SMITH DB 1657 PG 773
(37B) GAIL HARTZELL PERROTT DB 1707 PG 1278
(42) HOMER A. SHAFFER JR. DB 1449 PG 280 PC C SLIDE 36
SP. CUT BASE DITCH W/CL B RIPRAP SEE DETAIL X
SPECIAL CUT DITCH SEE DETAIL A
MATCHLINE -LDET_2- STA. 24+00 SEE SHEET 2B-4
BEGIN CONSTRUCTION -L_DET2- PC Sta. 10+00.00= -L- POC Sta.79+85.99 1.09′ LT.
TIE BERM BASE DITCH TO TOE PROTECTION
TOE PROTECTION W/CL B RIPRAP SEE DETAIL H
TEMP. GUARDRAIL
TEMP. GREU TL-3
TEMP. B-77
-L_DET2- N 8° 59′ 33.2″ W
5 TONS CL B RIPRAP W/14 SY GEOTEXTILE
EXTEND AS REQUIRED DURING PHASING
US19/129 BLAIRSVILLE HWY 26′ PAVED ROADWAY
-L-
10+00 80+00 15+00 85+00 20+00 90+00
2 TONS CL B RIPRAP W/7 SY GEOTEXTILE
BEGIN TEMPORARY SHORING -L_DET2- PT Sta.16+17.91 (17.00′ LT)
-L_DET2- PT Sta. 19+57.61
END TEMPORARY SHORING -L_DET2- PT Sta.21+69.85 (17.00′ LT)
(41) CANDACE LOVE, HEIRS DB 868 PG 91 PC F SLIDE 65A
(41A) MARGUERITE C PROSPERO O'BRYON DB 1526 PG199 PC C SLIDE 36
(45) KATIE A. ERWIN DB 1123 PG 357 PC C SLIDE 36B
(40) WILLIAM J. TOVAR, ET UX DB 1591 PG 186
(39) HOMER A. SHAFFER DB 829 PG 189 PC C SLIDE 36B
SHELLEY D. FARMER DB 1460 PG 538
SHELLEY D. FARMER DB 1460 PG 538 PC C SLIDE 36B
PDE
PUE
R/W
RETAIN

■—■	TEMPORARY DRAINAGE /PERMANENT DRAINAGE TO BE UTILIZED WHILE THE TEMPORARY DETOUR IS IN PLACE.
■—■	PROPOSED DRAINAGE FOR FINAL CONDITION.

NOTES:
ALL DRIVES ARE 16′ WIDE WITH 10′ RADII UNLESS OTHERWISE NOTED.
ALL DETOURS WILL BE REMOVED.

FOR R/W AND EASEMENTS STATIONS/OFFSETS SEE SHTS. 9 AND 10.

FOR DITCH DETAILS SEE SHT. 2D-1 & 2D-2
FOR -L_DET2- PROFILE SEE SHT. 39
FOR TRAFFIC CONTROL PLANS SEE SHTS. TMP-1 THRU TMP-56

RK&K
P: (919) 878-9560
8601 Six Forks Road, Forum 1,Suite 700
Raleigh, North Carolina 27615-3960
NC License No. F-0112
Engineers | Construction Managers | Planners | Scientists
www.rkk.com
Responsive People | Creative Solutions

-L_DET2-

PROJECT REFERENCE NO.	SHEET NO.
R-5861	2B-4

R/W SHEET NO.

ROADWAY DESIGN ENGINEER	HYDRAULICS ENGINEER
DocuSigned by: Brandon J. McInnis BE6912CC24204D4... NORTH CAROLINA PROFESSIONAL ENGINEER SEAL 29470 BRANDON J. McINNIS 10/31/2023	DocuSigned by: Alexis S. Burke 08E52EF5827E423... NORTH CAROLINA PROFESSIONAL ENGINEER SEAL 46155 ALEXIS S. BURKE 10/30/2023

DOCUMENT NOT CONSIDERED FINAL
UNLESS ALL SIGNATURES COMPLETED

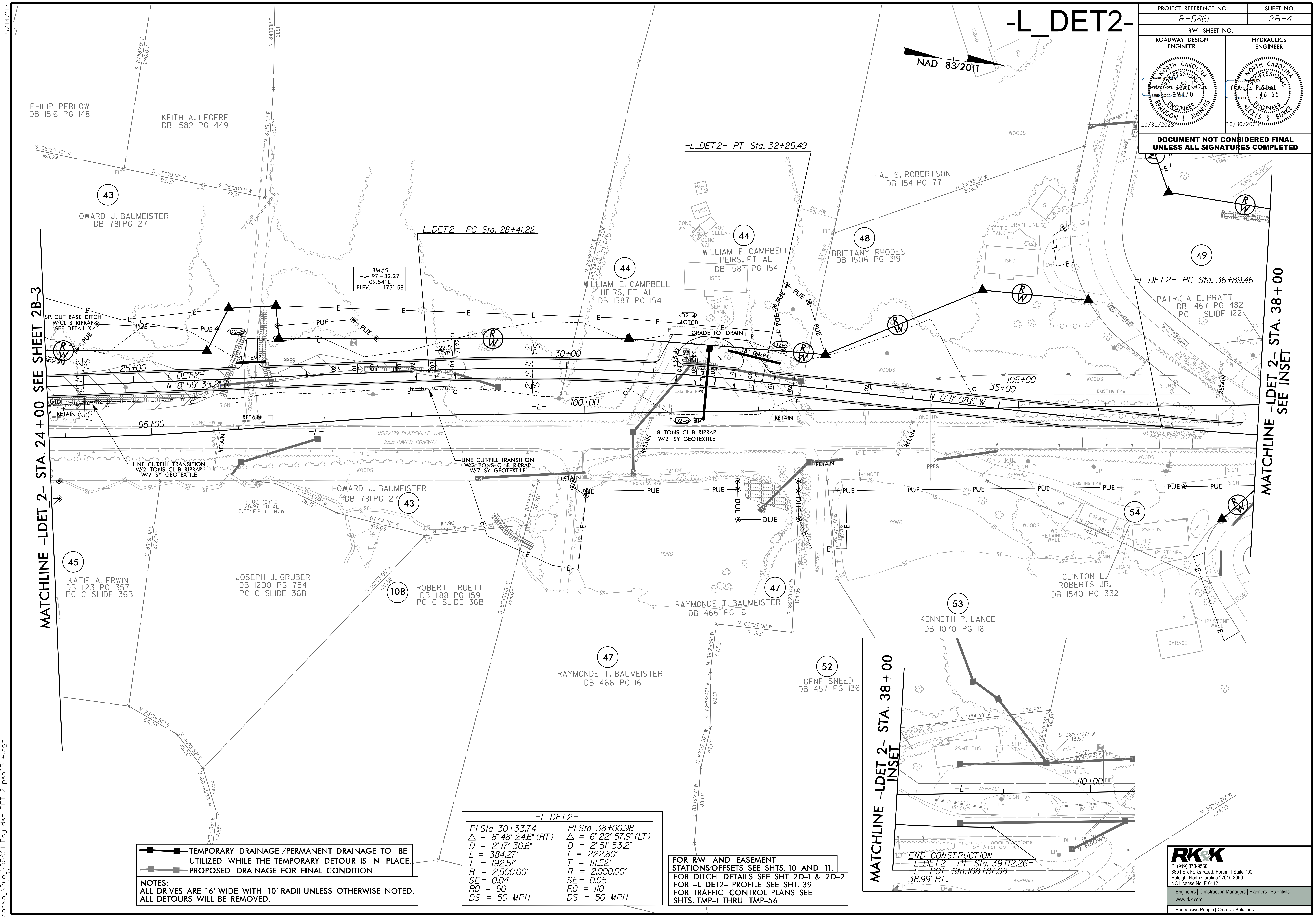
NAD 83/2011
PHILIP PERLOW
DB 1516 PG 148
KEITH A. LEGERE
DB 1582 PG 449
43
HOWARD J. BAUMEISTER
DB 781 PG 27
44
WILLIAM E. CAMPBELL
HEIRS, ET AL
DB 1587 PG 154
48
BRITTANY RHODES
DB 1506 PG 319
HAL S. ROBERTSON
DB 1541 PG 77
49
PATRICIA E. PRATT
DB 1467 PG 482
PC H SLIDE 122
45
KATIE A. ERWIN
DB 1123 PG 357
PC C SLIDE 36B
JOSEPH J. GRUBER
DB 1200 PG 754
PC C SLIDE 36B
108
ROBERT TRUETT
DB 1188 PG 159
PC C SLIDE 36B
47
RAYMONDE T. BAUMEISTER
DB 466 PG 16
52
GENE SNEED
DB 457 PG 136
53
KENNETH P. LANCE
DB 1070 PG 161
54
CLINTON L. ROBERTS JR.
DB 1540 PG 332
MATCHLINE -LDET 2- STA. 24+00 SEE SHEET 2B-3
MATCHLINE -LDET 2- STA. 38+00 SEE INSET
MATCHLINE -LDET 2- STA. 38+00 INSET
-L_DET2- PC Sta. 28+41.22
-L_DET2- PT Sta. 32+25.49
-L_DET2- PC Sta. 36+89.46
-L_DET2-
N 8°59' 33.2" W
N 0°11' 08.6" W
-L-
25+00
30+00
35+00
95+00
100+00
105+00
110+00
BM#5
-L- 97+32.27
109.54' LT
ELEV. = 1731.58
SP. CUT BASE DITCH
W/CL B RIPRAP
SEE DETAIL X
LINE CUT/FILL TRANSITION
W/2 TONS CL B RIPRAP
W/7 SY GEOTEXTILE
8 TONS CL B RIPRAP
W/21 SY GEOTEXTILE
GRADE TO DRAIN
18" TEMP
22.5' (TYP)
D2-4
4 OTCB
D2-5
D2-7
PUE
DUE
RETAIN
US19/129 BLAIRSVILLE HWY
25.5' PAVED ROADWAY
WOODS
POND
ISFD
2SFBUS
2SMTLBUS
GARAGE
SEPTIC TANK
DRAIN LINE
END CONSTRUCTION
-L_DET2- POT Sta. 39+12.26=
-L- POT Sta. 108+87.08
38.99' RT.

-L_DET2-	
PI Sta 30+33.74	PI Sta 38+00.98
△ = 8° 48' 24.6" (RT)	△ = 6° 22' 57.9" (LT)
D = 2° 17' 30.6"	D = 2° 51' 53.2"
L = 384.27'	L = 222.80'
T = 192.51'	T = 111.52'
R = 2,500.00'	R = 2,000.00'
SE = 0.04	SE = 0.05
RO = 90	RO = 110
DS = 50 MPH	DS = 50 MPH

FOR R/W AND EASEMENT STATIONS/OFFSETS SEE SHTS. 10 AND 11.

FOR DITCH DETAILS SEE SHT. 2D-1 & 2D-2
FOR -L_DET2- PROFILE SEE SHT. 39
FOR TRAFFIC CONTROL PLANS SEE SHTS. TMP-1 THRU TMP-56

■—■	TEMPORARY DRAINAGE /PERMANENT DRAINAGE TO BE UTILIZED WHILE THE TEMPORARY DETOUR IS IN PLACE.
■—■	PROPOSED DRAINAGE FOR FINAL CONDITION.

NOTES:
ALL DRIVES ARE 16' WIDE WITH 10' RADII UNLESS OTHERWISE NOTED.
ALL DETOURS WILL BE REMOVED.

RK&K
P: (919) 878-9560
8601 Six Forks Road, Forum 1,Suite 700
Raleigh, North Carolina 27615-3960
NC License No. F-0112
Engineers | Construction Managers | Planners | Scientists
www.rkk.com
Responsive People | Creative Solutions

5/14/99
8/25/2023
R:\Roadway\Proj\R5861_Rdy_dsn_DET_2_psh2B-4.dgn

-L_DET3-

-L_DET3-

PI Sta 10+73.43	PI Sta 13+29.59	PI Sta 19+71.81	PI Sta 22+26.06
△ = 8° 23′ 59.2″ (RT)	△ = 20° 44′ 44.1″ (LT)	△ = 22° 29′ 34.2″ (LT)	△ = 9° 09′ 23.9″ (RT)
D = 5° 43′ 55.1″	D = 5° 43′ 55.1″	D = 6° 22′ 10.1″	D = 5° 43′ 55.1″
L = 146.54′	L = 361.93′	L = 353.13′	L = 159.75′
T = 73.43′	T = 183.04′	T = 178.96′	T = 80.08′
R = 1,000.00′	R = 1,000.00′	R = 900.00′	R = 1,000.00′
SE = 0.06	SE = 0.06	SE = 0.06	SE = 0.06
RO = 44	RO = 132	RO = 132	DS = 50 MPH
DS = 50 MPH	DS = 50 MPH	DS = 50 MPH	

PROJECT REFERENCE NO.	SHEET NO.
R-5861	2B-5
R/W SHEET NO.	
ROADWAY DESIGN ENGINEER	HYDRAULICS ENGINEER
DocuSigned by: Brandon McInnis BE6912CC24204D4... NORTH CAROLINA PROFESSIONAL ENGINEER SEAL 29470 BRANDON J. McINNIS 10/31/2023	DocuSigned by: Alexis Burke 08E52EF5827E423... NORTH CAROLINA PROFESSIONAL ENGINEER SEAL 46155 ALEXIS S. BURKE 10/30/2023

DOCUMENT NOT CONSIDERED FINAL UNLESS ALL SIGNATURES COMPLETED

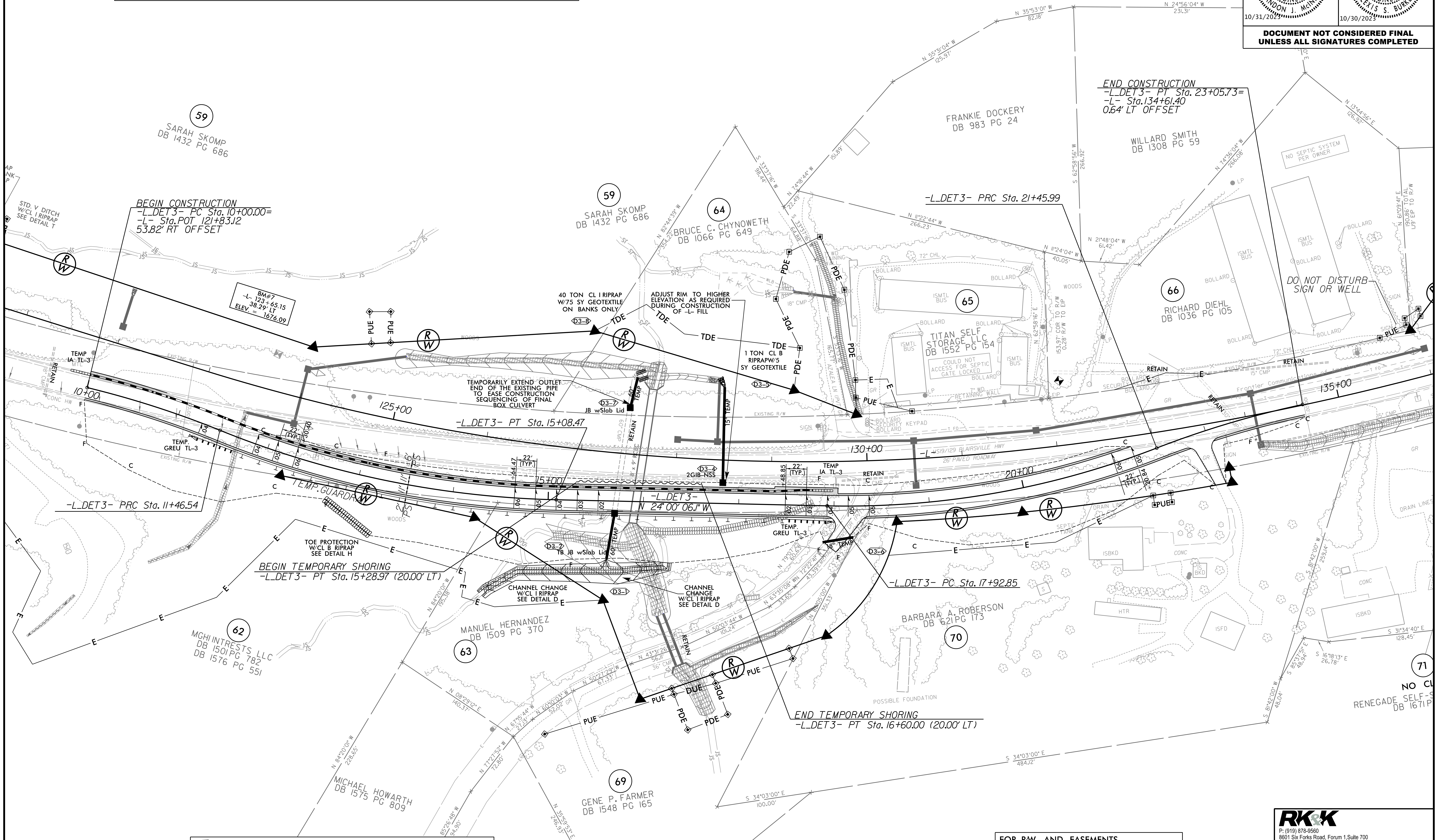
NAD 83/2011
BEGIN CONSTRUCTION
-L_DET3- PC Sta. 10+00.00=
-L- Sta.POT 121+83.12
53.82′ RT OFFSET
END CONSTRUCTION
-L_DET3- PT Sta. 23+05.73=
-L- Sta.134+61.40
0.64′ LT OFFSET
-L_DET3- PRC Sta. 21+45.99
-L_DET3- PT Sta. 15+08.47
-L_DET3- PRC Sta. 11+46.54
-L_DET3- PC Sta. 17+92.85
BEGIN TEMPORARY SHORING
-L_DET3- PT Sta. 15+28.97 (20.00′ LT)
END TEMPORARY SHORING
-L_DET3- PT Sta. 16+60.00 (20.00′ LT)
-L_DET3-
N 24° 00′ 06.1″ W
BM#7
-L- 123+65.15
38.29′ LT
ELEV = 1676.09
STD. V DITCH W/CL I RIPRAP SEE DETAIL T
40 TON CL I RIPRAP W/75 SY GEOTEXTILE ON BANKS ONLY
ADJUST RIM TO HIGHER ELEVATION AS REQUIRED DURING CONSTRUCTION OF -L- FILL
1 TON CL B RIPRAP W/5 SY GEOTEXTILE
TEMPORARILY EXTEND OUTLET END OF THE EXISTING PIPE TO EASE CONSTRUCTION SEQUENCING OF FINAL BOX CULVERT
TOE PROTECTION W/CL B RIPRAP SEE DETAIL H
CHANNEL CHANGE W/CL I RIPRAP SEE DETAIL D
CHANNEL CHANGE W/CL I RIPRAP SEE DETAIL D
TEMP. GUARDRAIL
TEMP IA TL-3
TEMP. GREU TL-3
TEMP. GREU TL-3
TEMP IA TL-3
JB wSlab Lid
TB JB wSlab Lid
2GIB-NSS
D3-1
D3-2
D3-3
D3-4
D3-5
D3-6
D3-7
D3-8
RETAIN
TDE
PDE
PUE
DUE
E
C
F
R/W
125+00
130+00
135+00
15+00
20+00
10+00
-L- SR 1129 BLAIRSVILLE HWY
26′ PAVED ROADWAY
22′ (TYP.)
59 SARAH SKOMP DB 1432 PG 686
59 SARAH SKOMP DB 1432 PG 686
64 BRUCE C. CHYNOWETH DB 1066 PG 649
65 TITAN SELF STORAGE LLC DB 1552 PG 154
66 RICHARD DIEHL DB 1036 PG 105
FRANKIE DOCKERY DB 983 PG 24
WILLARD SMITH DB 1308 PG 59
DO NOT DISTURB SIGN OR WELL
COULD NOT ACCESS FOR SEPTIC GATE LOCKED
NO SEPTIC SYSTEM PER OWNER
62 MGHI INTRESTS LLC DB 1501 PG 782 DB 1576 PG 551
63 MANUEL HERNANDEZ DB 1509 PG 370
69 GENE P. FARMER DB 1548 PG 165
70 BARBARA A. ROBERSON DB 621 PG 173
71 RENEGADE SELF-S DB 1671 P
MICHAEL HOWARTH DB 1575 PG 809
POSSIBLE FOUNDATION
WOODS
ISBKD
ISFD
HTR
CONC
ISMTL BUS
BOLLARD
SECURITY KEYPAD
Frontier Communications
N 35°53′01″ W 82.18′
N 24°56′04″ W 231.31′
N 55°31′04″ W 125.97′
N 74°36′08″ W 266.08′
N 13°44′56″ E 126.92′
N 8°22′44″ W 266.23′
N 8°24′04″ W 40.05′
N 21°48′04″ W 61.42′
S 62°58′56″ W 266.92′
S 34°03′00″ E 484.12′
S 34°03′00″ E 100.00′
S 31°34′40″ E 128.45′
S 16°18′13″ E 26.78′
N 84°20′0″ W 228.65′
N 08°29′12″ E 140.37′
N 84°20′0″ W 195.38′

■—■	TEMPORARY DRAINAGE /PERMANENT DRAINAGE TO BE UTILIZED WHILE THE TEMPORARY DETOUR IS IN PLACE.
■—■	PROPOSED DRAINAGE FOR FINAL CONDITION.

NOTES:
ALL DRIVES ARE 16′ WIDE WITH 10′ RADII UNLESS OTHERWISE NOTED.
ALL DETOURS WILL BE REMOVED.

FOR R/W AND EASEMENTS STATIONS/OFFSETS SEE SHTS. 12 AND 13.
FOR DITCH DETAILS SEE SHT. 2D-1 & 2D-2
FOR -L_DET3- PROFILE SEE SHT. 40
FOR TRAFFIC CONTROL PLANS SEE SHTS. TMP-1 THRU TMP-56

RK&K
P: (919) 878-9560
8601 Six Forks Road, Forum 1,Suite 700
Raleigh, North Carolina 27615-3960
NC License No. F-0112
Engineers | Construction Managers | Planners | Scientists
www.rkk.com
Responsive People | Creative Solutions

8/17/99
8/25/2023
R:\Roadway\Proj\R5861_Rdy_dsn_DET_3_psh2B-5.dgn

-L_DET4-

PROJECT REFERENCE NO.	SHEET NO.
R-5861	2B-6
R/W SHEET NO.	

ROADWAY DESIGN ENGINEER	HYDRAULICS ENGINEER
DocuSigned by: Brandon McInnis BE6912CC24204D4... SEAL 29470 BRANDON J. McINNIS 10/31/2023	DocuSigned by: Alexis Burke 08E52EF5827E423... SEAL 46155 ALEXIS S. BURKE 10/30/2023

DOCUMENT NOT CONSIDERED FINAL UNLESS ALL SIGNATURES COMPLETED

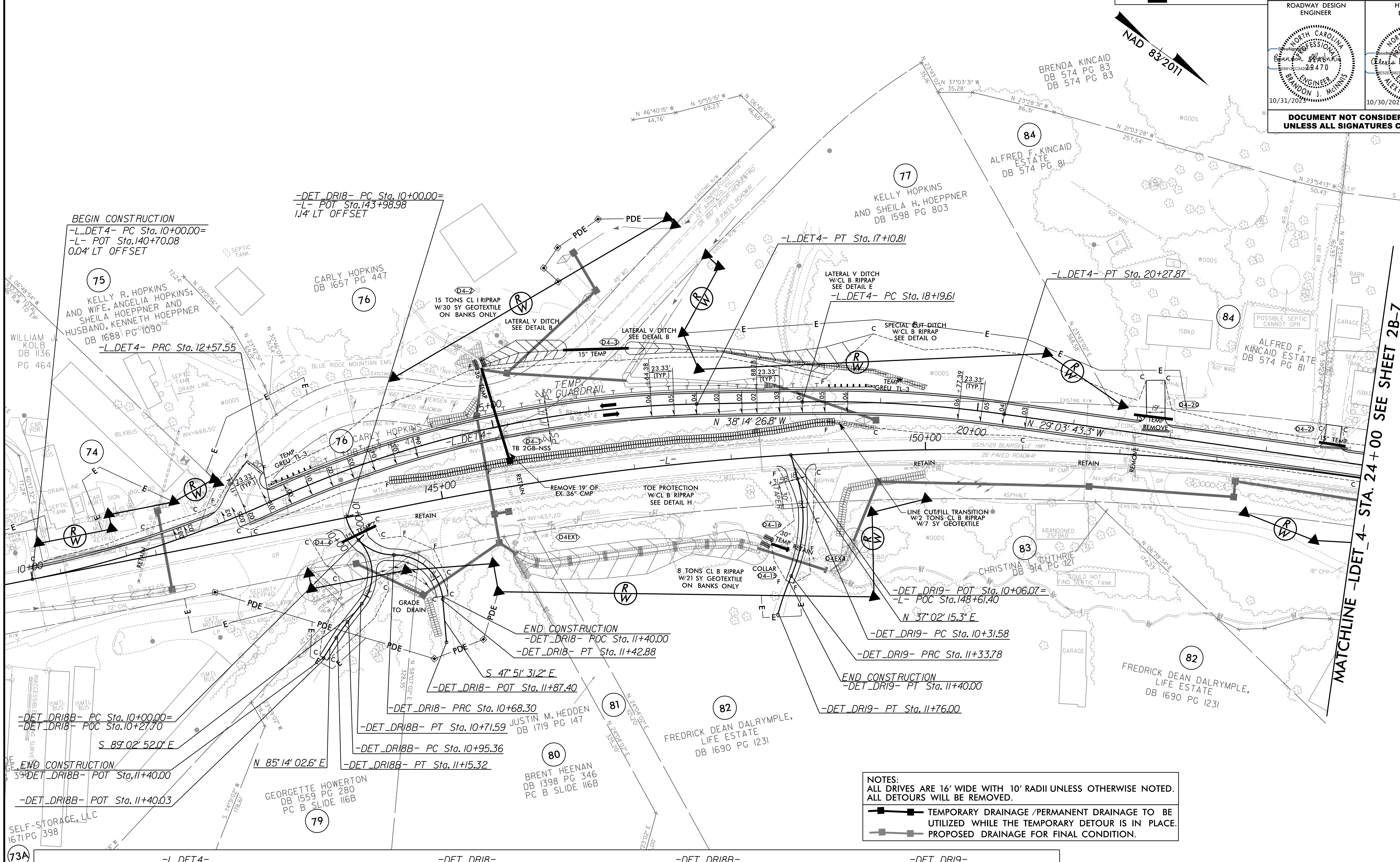

NAD 83/2011
BEGIN CONSTRUCTION
-L_DET4- PC Sta. 10+00.00=
-L- POT Sta.140+70.08
0.04' LT OFFSET
-DET_DR18- PC Sta. 10+00.00=
-L- POT Sta.143+98.98
1.14' LT OFFSET
-L_DET4- PRC Sta. 12+57.55
-L_DET4- PT Sta. 17+10.81
-L_DET4- PC Sta. 18+19.61
-L_DET4- PT Sta. 20+27.87
75
KELLY R. HOPKINS AND WIFE, ANGELIA HOPKINS; SHEILA HOEPPNER AND HUSBAND, KENNETH HOEPPNER DB 1688 PG 1090
76
CARLY HOPKINS DB 1657 PG 447
77
KELLY HOPKINS AND SHEILA H. HOEPPNER DB 1598 PG 803
84
ALFRED F. KINCAID ESTATE DB 574 PG 81
BRENDA KINCAID DB 574 PG 83 DB 574 PG 83
WILLIAM J. KOLB DB 1136 PG 464
74
D4-2
15 TONS CL I RIPRAP W/30 SY GEOTEXTILE ON BANKS ONLY
LATERAL V DITCH SEE DETAIL B
D4-3
15" TEMP
LATERAL V DITCH W/CL B RIPRAP SEE DETAIL E
SPECIAL CUT DITCH W/CL B RIPRAP SEE DETAIL O
PDE
TEMP. GUARDRAIL
TEMP. GREU TL-3
23.33' (TYP.)
N 38° 14' 26.8" W
N 29° 03' 43.3" W
D4-1
TB 2GB-NSS
REMOVE 19' OF EX. 36" CMP
TOE PROTECTION W/CL B RIPRAP SEE DETAIL H
8 TONS CL B RIPRAP W/21 SY GEOTEXTILE ON BANKS ONLY
LINE CUT/FILL TRANSITION W/2 TONS CL B RIPRAP W/7 SY GEOTEXTILE
RETAIN
REMOVE
15" TEMP REMOVE
GRADE TO DRAIN
COLLAR
D4-4
D4-15
D4-16
D4-20
D4EX1
D4EX4
30" TEMP
145+00
150+00
15+00
20+00
10+00
US19/129 BLAIRSVILLE HWY
26' PAVED ROADWAY
SR 1667 TAYLOR HENSEN RD
18' PAVED ROADWAY
BLUE RIDGE MOUNTIAN EMS
WOODS
-DET_DR19- POT Sta. 10+06.07=
-L- POC Sta.148+61.40
N 37° 02' 15.3" E
-DET_DR19- PC Sta. 10+31.58
-DET_DR19- PRC Sta. 11+33.78
END CONSTRUCTION
-DET_DR19- PT Sta. 11+40.00
-DET_DR19- PT Sta. 11+76.00
END CONSTRUCTION
-DET_DR18- POC Sta. 11+40.00
-DET_DR18- PT Sta. 11+42.88
S 47° 51' 31.2" E
-DET_DR18- POT Sta. 11+87.40
-DET_DR18- PRC Sta. 10+68.30
-DET_DR18B- PT Sta. 10+71.59
-DET_DR18B- PC Sta. 10+95.36
-DET_DR18B- PT Sta. 11+15.32
N 85° 14' 02.6" E
-DET_DR18B- PC Sta. 10+00.00=
-DET_DR18- POC Sta.10+27.70
S 89° 02' 52.0" E
END CONSTRUCTION
-DET_DR18B- POT Sta.11+40.00
-DET_DR18B- POT Sta. 11+40.03
83
CHRISTINA L. GUTHRIE DB 914 PG 121
82
FREDRICK DEAN DALRYMPLE, LIFE ESTATE DB 1690 PG 1231
81
JUSTIN M. HEDDEN DB 1719 PG 147
80
BRENT HEENAN DB 1398 PG 346 PC B SLIDE 116B
79
GEORGETTE HOWERTON DB 1559 PG 280 PC B SLIDE 116B
SELF-STORAGE, LLC 1671 PG 398
73A
MATCHLINE -LDET_4- STA. 24+00 SEE SHEET 2B-7

NOTES:
ALL DRIVES ARE 16' WIDE WITH 10' RADII UNLESS OTHERWISE NOTED.
ALL DETOURS WILL BE REMOVED.

■━━■	TEMPORARY DRAINAGE /PERMANENT DRAINAGE TO BE UTILIZED WHILE THE TEMPORARY DETOUR IS IN PLACE.
▨━━▨	PROPOSED DRAINAGE FOR FINAL CONDITION.

-L_DET4-

PI Sta 11+29.41
△ = 13° 25' 10.6" (LT)
D = 5° 12' 37.8"
L = 257.55'
T = 129.41'
R = 1,100.00'

PI Sta 14+87.52
△ = 23° 37' 01.0" (RT)
D = 5° 12' 37.8"
L = 453.26'
T = 229.97'
R = 1,100.00'
SE = 0.06
RO = 140
DS = 50 MPH

PI Sta 19+23.97
△ = 9° 10' 43.4" (RT)
D = 4° 24' 26.5"
L = 208.26'
T = 104.35'
R = 1,300.00'
SE = 0.06
RO = 140
DS = 50 MPH

-DET_DR18-

PI Sta 10+40.68
△ = 78° 15' 52.3" (LT)
D = 114° 35' 29.6"
L = 68.30'
T = 40.68'
R = 50.00'

PI Sta 11+14.49
△ = 85° 28' 02.8" (RT)
D = 114° 35' 29.6"
L = 74.58'
T = 46.19'
R = 50.00'

-DET_DR18B-

PI Sta 10+43.49
△ = 82° 02' 03.8" (RT)
D = 114° 35' 29.6"
L = 71.59'
T = 43.49'
R = 50.00'

PI Sta 11+05.35
△ = 5° 43' 05.5" (LT)
D = 28° 38' 52.4"
L = 19.96'
T = 9.99'
R = 200.00'

-DET_DR19-

PI Sta 10+84.76
△ = 39° 02' 18.7" (RT)
D = 38° 11' 49.9"
L = 102.20'
T = 53.17'
R = 150.00'

PI Sta 11+54.93
△ = 8° 03' 46.2" (LT)
D = 19° 05' 54.9"
L = 42.22'
T = 21.14'
R = 300.00'

FOR R/W AND EASEMENT STATIONS/OFFSETS SEE SHTS. 14 AND 15.

FOR DITCH DETAILS SEE SHT. 2D-1 & 2D-2
FOR -L_DET4- PROFILE SEE SHT. 40
FOR -DET_DR18- PROFILE SEE SHT. 43
FOR -DET_DR18B- PROFILE SEE SHT. 43
FOR -DET_DR19- PROFILE SEE SHT. 43
FOR TRAFFIC CONTROL PLANS SEE SHTS. TMP-1 THRU TMP-56

RK&K
P: (919) 878-9560
8601 Six Forks Road, Forum 1,Suite 700
Raleigh, North Carolina 27615-3960
NC License No. F-0112
Engineers | Construction Managers | Planners | Scientists
www.rkk.com
Responsive People | Creative Solutions

8/17/99
8/25/2023
R:\Roadway\Proj\R5861_Rdy_dsn_DET_4_psh2B-6.dgn
jhunson

-L_DET4-

PROJECT REFERENCE NO.	SHEET NO.
R-5861	2B-7
R/W SHEET NO.	

ROADWAY DESIGN ENGINEER	HYDRAULICS ENGINEER
DocuSigned by: Brandon McInnis BE6912CC24204D4... SEAL 29470 BRANDON J. McINNIS 10/31/2023	DocuSigned by: Alexis Burke 08E52EF5827E423... SEAL 46155 ALEXIS S. BURKE 10/30/2023

DOCUMENT NOT CONSIDERED FINAL UNLESS ALL SIGNATURES COMPLETED

-L_DET4-

PI Sta 32+11.30	PI Sta 38+91.55
Δ = 2° 15′ 37.4″ (RT)	Δ = 31° 58′ 31.6″ (LT)
D = 0° 27′ 04.1″	D = 3° 49′ 11.0″
L = 501.03′	L = 837.11′
T = 250.55′	T = 429.77′
R = 12,700.00′	R = 1,500.00′
SE = N.C.	SE = 0.06
RO = 50	RO = 140
DS = 50 MPH	DS = 50 MPH

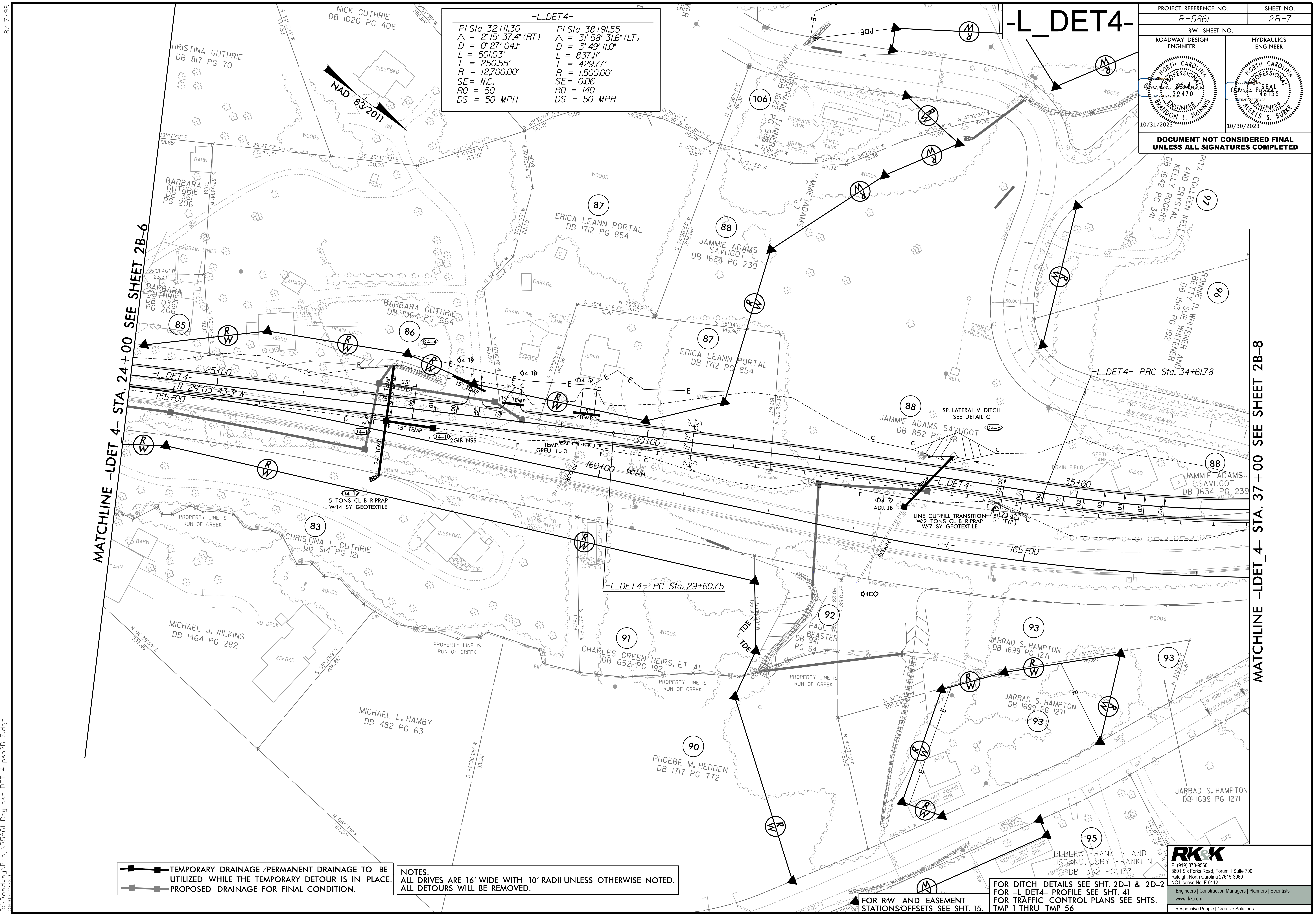
NAD 83/2011
MATCHLINE -LDET 4- STA. 24+00 SEE SHEET 2B-6
MATCHLINE -LDET_4- STA. 37+00 SEE SHEET 2B-8
NICK GUTHRIE DB 1020 PG 406
CHRISTINA GUTHRIE DB 817 PG 70
BARBARA GUTHRIE DB 361 PG 206
BARBARA GUTHRIE DB 0361 PG 206
BARBARA GUTHRIE DB 1064 PG 664
ERICA LEANN PORTAL DB 1712 PG 854
JAMMIE ADAMS SAVUGOT DB 1634 PG 239
JAMMIE ADAMS SAVUGOT DB 852 PG 178
STEPHANIE TANNER DB 1622 PG 986
RITA COLLEEN KELLY AND CRYSTAL KELLY ROGERS DB 1642 PG 341
RONNIE D. WHITENER AND BETTY SUE WHITENER DB 1513 PG 192
CHRISTINA L. GUTHRIE DB 914 PG 121
MICHAEL J. WILKINS DB 1464 PG 282
MICHAEL L. HAMBY DB 482 PG 63
CHARLES GREEN HEIRS, ET AL DB 652 PG 192
PAUL W. BEASTER DB 941 PG 54
PHOEBE M. HEDDEN DB 1717 PG 772
JARRAD S. HAMPTON DB 1699 PG 1271
REBEKA FRANKLIN AND HUSBAND, CORY FRANKLIN DB 1332 PG 133
-L_DET4- N 29° 03′ 43.3″ W
25+00
30+00
35+00
155+00
160+00
165+00
-L-
-L_DET4- PC Sta. 29+60.75
-L_DET4- PRC Sta. 34+61.78
SP. LATERAL V DITCH SEE DETAIL C
5 TONS CL B RIPRAP W/14 SY GEOTEXTILE
LINE CUT/FILL TRANSITION W/2 TONS CL B RIPRAP W/7 SY GEOTEXTILE
TEMP GREU TL-3
2GIB-NSS
ADJ. JB
15″ TEMP
24″ TEMP
18″ TEMP
PROPERTY LINE IS RUN OF CREEK
SR 1580 TAYLOR HENSEN RD
Frontier Communications of America
EXISTING R/W
RETAIN
WOODS
SEPTIC NOT FOUND CANNOT GPR
PDE
TDE
85
86
87
88
106
97
96
83
91
92
90
93
95

■—■	TEMPORARY DRAINAGE/PERMANENT DRAINAGE TO BE UTILIZED WHILE THE TEMPORARY DETOUR IS IN PLACE.
■—■	PROPOSED DRAINAGE FOR FINAL CONDITION.

NOTES:
ALL DRIVES ARE 16′ WIDE WITH 10′ RADII UNLESS OTHERWISE NOTED.
ALL DETOURS WILL BE REMOVED.

FOR R/W AND EASEMENT STATIONS/OFFSETS SEE SHT. 15.

FOR DITCH DETAILS SEE SHT. 2D-1 & 2D-2
FOR -L_DET4- PROFILE SEE SHT. 41
FOR TRAFFIC CONTROL PLANS SEE SHTS. TMP-1 THRU TMP-56

RK&K
P: (919) 878-9560
8601 Six Forks Road, Forum 1,Suite 700
Raleigh, North Carolina 27615-3960
NC License No. F-0112
Engineers | Construction Managers | Planners | Scientists
www.rkk.com
Responsive People | Creative Solutions

8/17/99
10/6/2023
R:\Roadway\Proj\R5861_Rdy_dsn_DET_4_psh2B-7.dgn
bespinosa

-L_DET4-

PROJECT REFERENCE NO.	SHEET NO.
R-5861	2B-8
R/W SHEET NO.	

ROADWAY DESIGN ENGINEER	HYDRAULICS ENGINEER
DocuSigned by: Brandon McInnis BE6912CC24204D4... NORTH CAROLINA PROFESSIONAL ENGINEER SEAL 29470 BRANDON J. McINNIS 10/31/2023	DocuSigned by: Alexis Burke 08E52EE5827E423... NORTH CAROLINA PROFESSIONAL ENGINEER SEAL 46155 ALEXIS S. BURKE 10/30/2023

DOCUMENT NOT CONSIDERED FINAL UNLESS ALL SIGNATURES COMPLETED

-L_DET4-
PI Sta 38+91.55
Δ = 31° 58′ 31.6″ (LT)
D = 3° 49′ 11.0″
L = 837.11′
T = 429.77′
R = 1,500.00′
SE= 0.06
RO = 140
DS = 50 MPH

MATCHLINE -L_DET4- STA. 37+00 SEE SHEET 2B-7

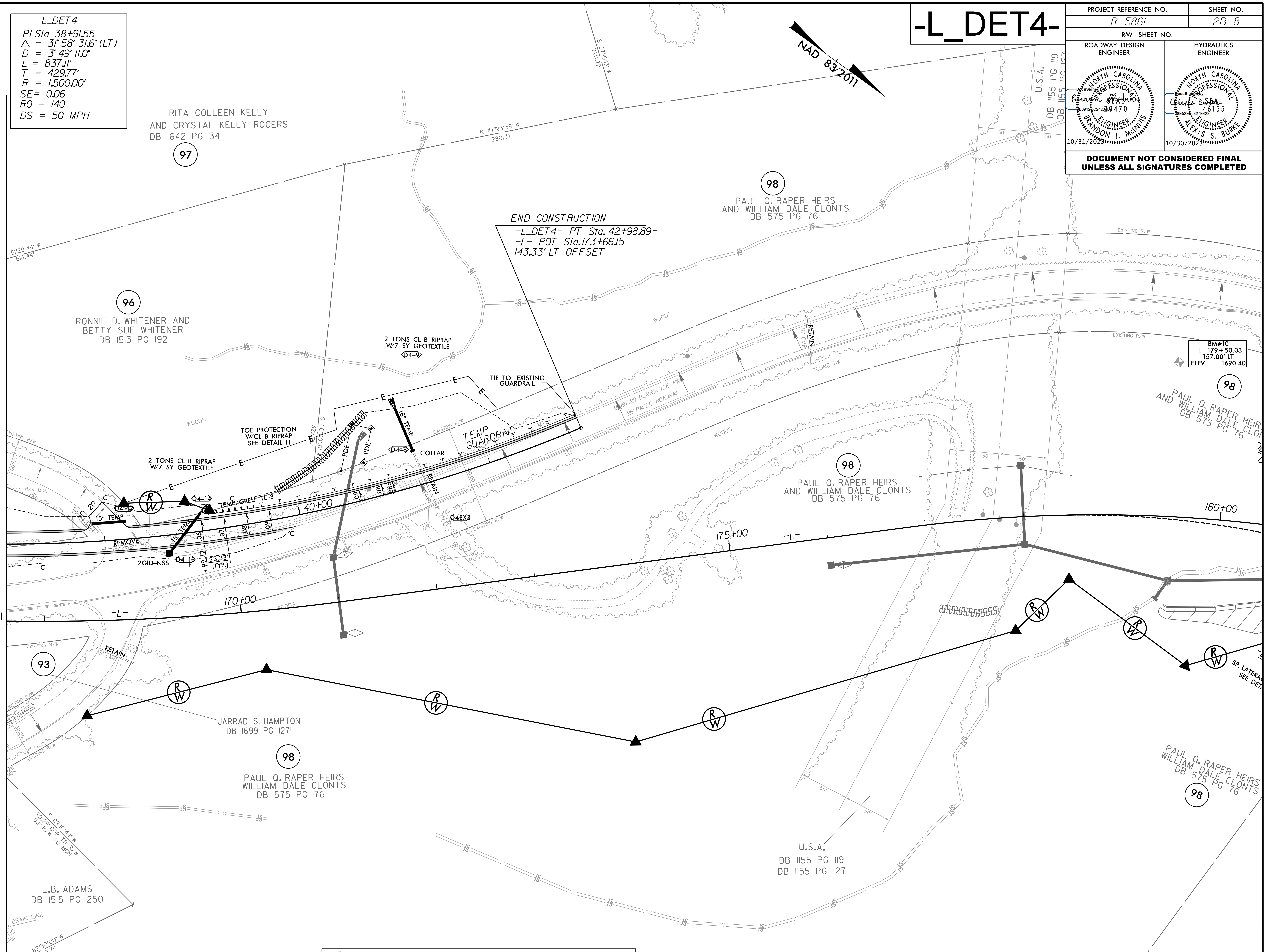

NAD 83/2011
RITA COLLEEN KELLY
AND CRYSTAL KELLY ROGERS
DB 1642 PG 341
97
N 47°23′39″ W
280.77′
S 37°10′51″ W
120.72′
U.S.A.
DB 1155 PG 119
DB 1155 PG 127
98
PAUL O. RAPER HEIRS
AND WILLIAM DALE CLONTS
DB 575 PG 76
END CONSTRUCTION
-L_DET4- PT Sta. 42+98.89=
-L- POT Sta.173+66.15
143.33′ LT OFFSET
51°29′44″ W
614.44′
96
RONNIE D. WHITENER AND
BETTY SUE WHITENER
DB 1513 PG 192
2 TONS CL B RIPRAP
W/7 SY GEOTEXTILE
D4-9
TIE TO EXISTING
GUARDRAIL
WOODS
TOE PROTECTION
W/CL B RIPRAP
SEE DETAIL H
2 TONS CL B RIPRAP
W/7 SY GEOTEXTILE
E
PDE
18″ TEMP
D4-8
COLLAR
TEMP.
GUARDRAIL
EXISTING R/W
US 19/129 BLAIRSVILLE HWY
26′ PAVED ROADWAY
RETAIN
CONC HW
D4EX3
R/W MON
20′
C
F
15″ TEMP
D4-17
R/W
D4-14
TEMP. GREU TL-3
40+00
.06
.07
.08
.09
.085
REMOVE
18″ CMP
15″ TEMP
2GID-NSS
D4-13
+99.72
23.33′
(TYP.)
MTL
WD POST
170+00
-L-
175+00
180+00
BM#10
-L- 179+50.03
157.00′ LT
ELEV. = 1690.40
EXISTING R/W
50′
93
JARRAD S. HAMPTON
DB 1699 PG 1271
98
PAUL O. RAPER HEIRS
WILLIAM DALE CLONTS
DB 575 PG 76
S 09°10′44″ W
190.79′ COR TO R/W
CUT R/W TO MON
L.B. ADAMS
DB 1515 PG 250
DRAIN LINE
N 62°30′00″ W
209.71′
U.S.A.
DB 1155 PG 119
DB 1155 PG 127
SP LATERAL
SEE DET
PAUL O. RAPER HEIRS
WILLIAM DALE CLONTS
DB 575 PG 76
98
JS

- ■—■ TEMPORARY DRAINAGE /PERMANENT DRAINAGE TO BE UTILIZED WHILE THE TEMPORARY DETOUR IS IN PLACE.
- ■—■ PROPOSED DRAINAGE FOR FINAL CONDITION.

NOTES:
ALL DRIVES ARE 16′ WIDE WITH 10′ RADII UNLESS OTHERWISE NOTED.
ALL DETOURS WILL BE REMOVED.
-DET_5- WAS REMOVED FROM THE PLANS.

FOR R/W AND EASEMENT STATIONS/OFFSETS SEE SHT. 16.
FOR DITCH DETAILS SEE SHT. 2D-1 & 2D-2
FOR -L_DET4- PROFILE SEE SHT. 41
FOR TRAFFIC CONTROL PLANS SEE SHTS. TMP-1 THRU TMP-56

RK&K
P: (919) 878-9560
8601 Six Forks Road, Forum 1,Suite 700
Raleigh, North Carolina 27615-3960
NC License No. F-0112
Engineers | Construction Managers | Planners | Scientists
www.rkk.com
Responsive People | Creative Solutions

8/17/99

8/25/2023
R:\Roadway\Proj\R5861_Rdy_dsn_DET_4_psh2B-8.dgn
jhinson

-L_DET6-

PROJECT REFERENCE NO.	SHEET NO.
R-5861	2B-9
R/W SHEET NO.	

ROADWAY DESIGN ENGINEER	HYDRAULICS ENGINEER
DocuSigned by: Brandon McInnis BE6912CC24204D4... SEAL 29470 BRANDON J. McINNIS 10/31/2023	DocuSigned by: Alexis Burke 08E52EF5827E423... SEAL 46155 ALEXIS S. BURKE 10/30/2023

DOCUMENT NOT CONSIDERED FINAL UNLESS ALL SIGNATURES COMPLETED

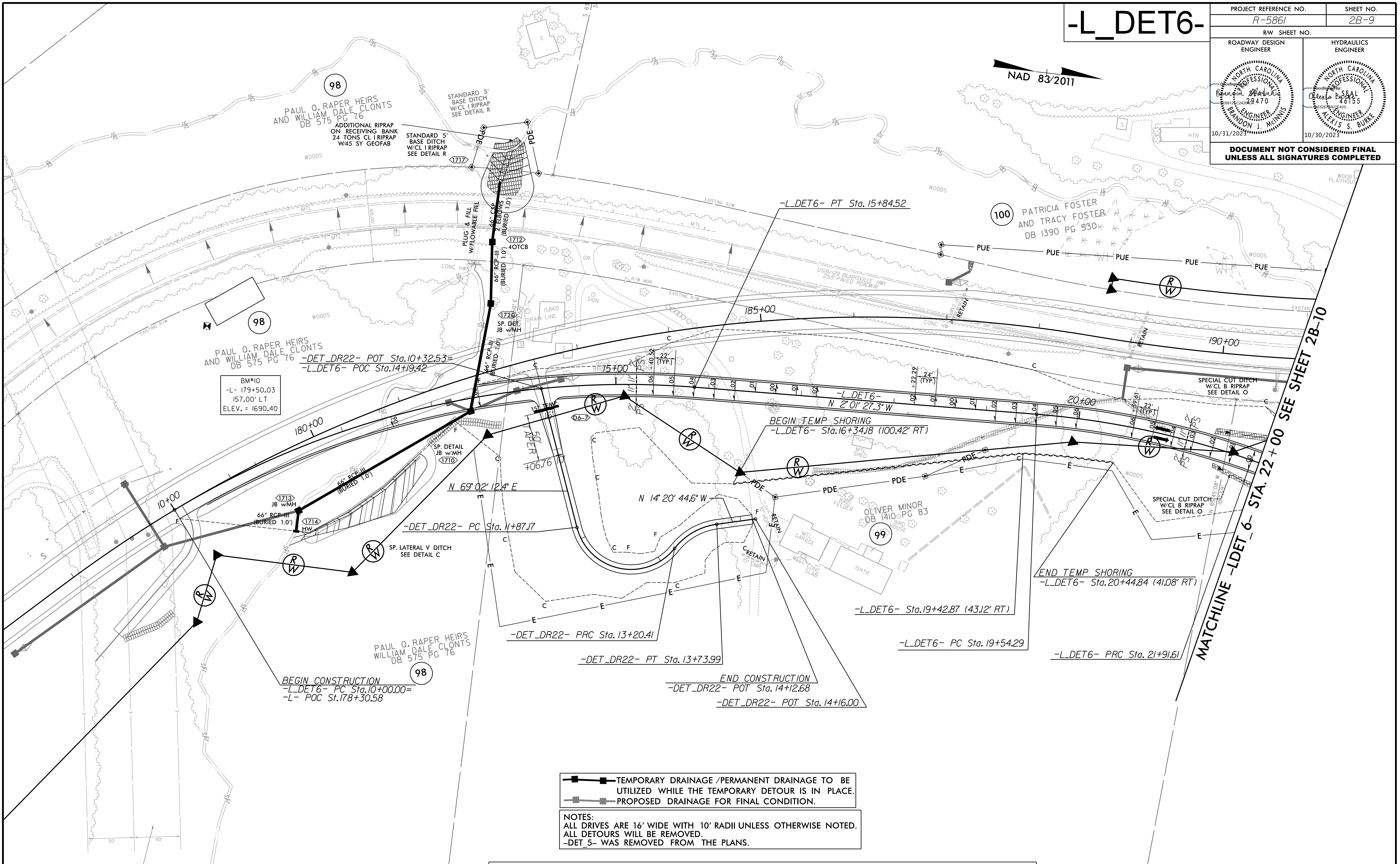
NAD 83/2011
98
PAUL Q. RAPER HEIRS
AND WILLIAM DALE CLONTS
DB 575 PG 76
ADDITIONAL RIPRAP
ON RECEIVING BANK
24 TONS CL I RIPRAP
W/45 SY GEOFAB
STANDARD 5' BASE DITCH W/CL I RIPRAP SEE DETAIL R
STANDARD 5' BASE DITCH W/CL I RIPRAP SEE DETAIL R
1717
PDE
PDE
WOODS
MTL
100.00'
PLUG & FILL W/FLOWABLE FILL
66" CSP 2 ELBOWS (BURIED 1.0')
1712
40TCB
66" RCP-III (BURIED 1.0')
CONC HW
GR
SIGN
ISBKD
DRAIN LINE
1720
SP. DET. JB w/MH
66" RCP-III (BURIED 1.0')
EXISTING R/W
R/W MON
US19/129 BLAIRSVILLE HWY
25.5' PAVED ROADWAY
-L_DET6- PT Sta. 15+84.52
100
PATRICIA FOSTER
AND TRACY FOSTER
DB 1390 PG 530
PUE
RETAIN
CONC HW
185+00
190+00
-DET_DR22- POT Sta.10+32.53=
-L_DET6- POC Sta.14+19.42
BM#10
-L- 179+50.03
157.00' LT
ELEV. = 1690.40
180+00
10+00
15+00
20+00
22' (TYP.)
24' (TYP.)
+40.52
+22.29
+59.61
-L_DET6-
N 2° 01' 27.3" W
15' TEMP
16'
D6-7
50' TAPER
+06.76
10'
R/W
SP. DETAIL JB w/MH
1710
1713
JB w/MH
66" RCP-III (BURIED 1.0')
1714
HW
66" RCP-III (BURIED 1.0')
N 69° 02' 12.4" E
-DET_DR22- PC Sta. 11+87.17
SP. LATERAL V DITCH SEE DETAIL C
N 14° 20' 44.6" W
BEGIN TEMP SHORING
-L_DET6- Sta.16+34.18 (100.42' RT)
MTL SHED
PDE
E
C
F
BIRD FEEDER
OLIVER MINOR
DB 1410 PG 83
99
BIRD HOUSE
MTL GARAGE
ISHTR
WELL
CONC SLAB
10" HDPE
15" CMP
SPECIAL CUT DITCH W/CL B RIPRAP SEE DETAIL O
SPECIAL CUT DITCH W/CL B RIPRAP SEE DETAIL O
N 85° 45' 08" W
1017.59'
END TEMP SHORING
-L_DET6- Sta.20+44.84 (41.08' RT)
-L_DET6- Sta.19+42.87 (43.12' RT)
-L_DET6- PC Sta. 19+54.29
-L_DET6- PRC Sta. 21+91.61
MATCHLINE -LDET_6- STA. 22+00 SEE SHEET 2B-10
-DET_DR22- PRC Sta. 13+20.41
-DET_DR22- PT Sta. 13+73.99
END CONSTRUCTION
-DET_DR22- POT Sta. 14+12.68
-DET_DR22- POT Sta. 14+16.00
BEGIN CONSTRUCTION
-L_DET6- PC Sta.10+00.00=
-L- POC St.178+30.58
WOOD PLAYHOUSE
HTR
S
50'
U.S.A.
DB 1155 PG 119
DB 1155 PG 127

TEMPORARY DRAINAGE /PERMANENT DRAINAGE TO BE UTILIZED WHILE THE TEMPORARY DETOUR IS IN PLACE.
PROPOSED DRAINAGE FOR FINAL CONDITION.

NOTES:
ALL DRIVES ARE 16' WIDE WITH 10' RADII UNLESS OTHERWISE NOTED.
ALL DETOURS WILL BE REMOVED.
-DET_5- WAS REMOVED FROM THE PLANS.

-L_DET6-			-DET_DR22-	
PI Sta 13+02.06	PI Sta 20+73.64	PI Sta 25+40.12	PI Sta 13+08.13	PI Sta 13+48.59
Δ = 35° 37' 42.0" (RT)	Δ = 15° 06' 30.4" (RT)	Δ = 56° 23' 51.3" (LT)	Δ = 127° 14' 01.3" (LT)	Δ = 43° 51' 04.3" (RT)
D = 6° 05' 43.1"	D = 6° 21' 58.3"	D = 8° 48' 53.0"	D = 95° 29' 34.7"	D = 81° 51' 04.0"
L = 584.52'	L = 237.32'	L = 639.81'	L = 133.24'	L = 53.57'
T = 302.06'	T = 119.35'	T = 348.51'	T = 120.96'	T = 28.18'
R = 940.00'	R = 900.00'	R = 650.00'	R = 60.00'	R = 70.00'
SE = 0.06	SE = 0.06	SE = 0.06	SE = 0.02	SE = 0.02
RO = 132	RO = 132	RO = 132	DS = 15 MPH	DS = 15 MPH
DS = 50 MPH	DS = 50 MPH	DS = 45 MPH		

FOR R/W AND EASEMENT STATIONS/OFFSETS SEE SHTS. 16 AND 17.

FOR DITCH DETAILS SEE SHT. 2D-1 & 2D-2
FOR -L_DET6- PROFILE SEE SHT. 42
FOR -DET_DR22- PROFILE SEE SHT. 43
FOR TRAFFIC CONTROL PLANS SEE SHTS. TMP-1 THRU TMP-56

RK&K
P: (919) 878-9560
8601 Six Forks Road, Forum 1,Suite 700
Raleigh, North Carolina 27615-3960
NC License No. F-0112
Engineers | Construction Managers | Planners | Scientists
www.rkk.com
Responsive People | Creative Solutions

8/17/99

8/25/2023
R:\Roadway\Proj\R5861_Rdy_dsn_DET_6_psh2B-9.dgn

-L_DET6-

PROJECT REFERENCE NO.	SHEET NO.
R-5861	2B-10

R/W SHEET NO.

ROADWAY DESIGN ENGINEER	HYDRAULICS ENGINEER
DocuSigned by: Brandon McInnis BE6912CC24204D4... NORTH CAROLINA PROFESSIONAL ENGINEER SEAL 29470 BRANDON J. McINNIS 10/31/2023	DocuSigned by: Alexis Burke 08E52EF5827E423... NORTH CAROLINA PROFESSIONAL ENGINEER SEAL 46155 ALEXIS S. BURKE 10/30/2023

DOCUMENT NOT CONSIDERED FINAL UNLESS ALL SIGNATURES COMPLETED

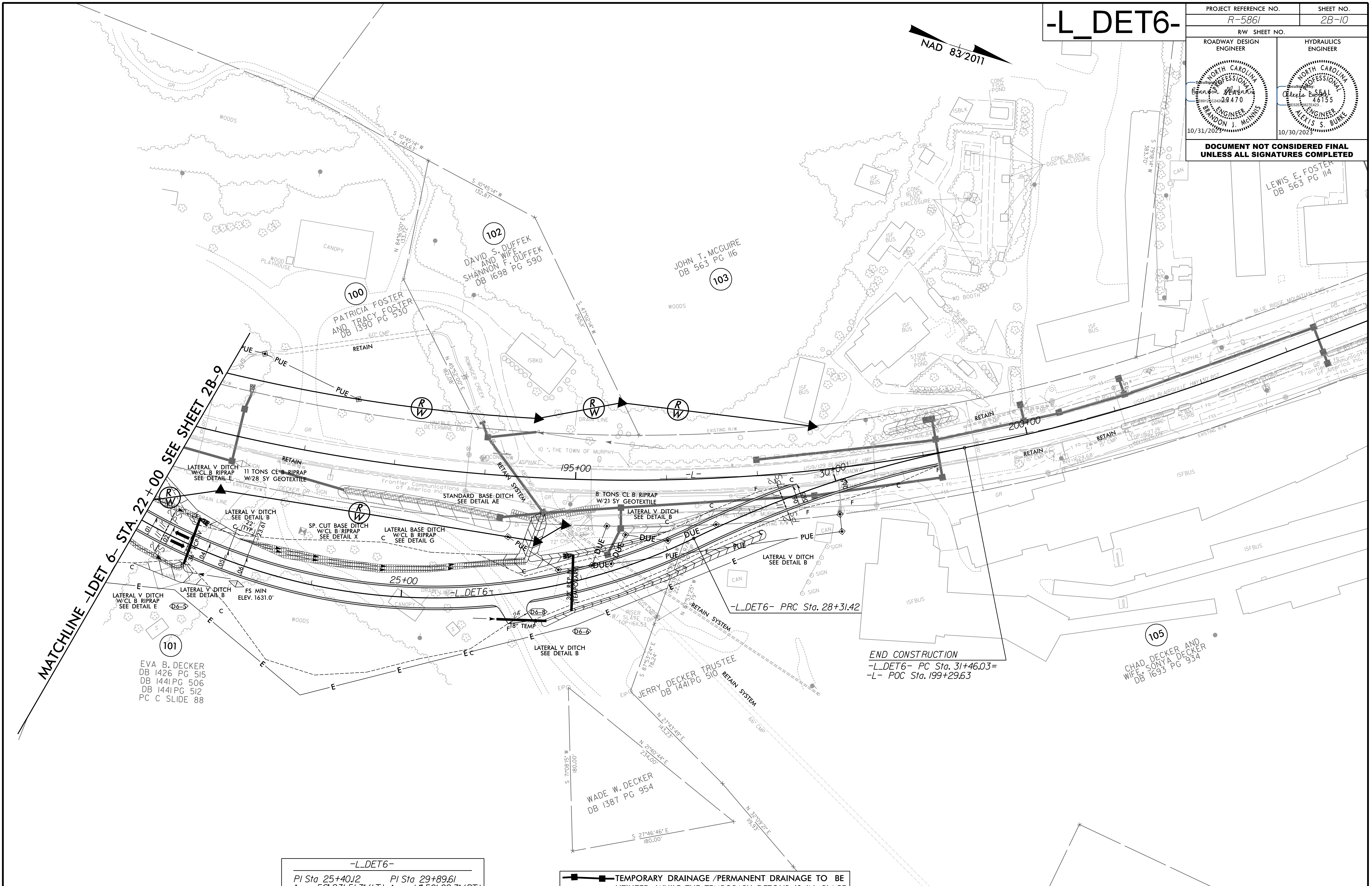
NAD 83/2011
MATCHLINE -LDET 6- STA. 22+00 SEE SHEET 2B-9
100
PATRICIA FOSTER AND TRACY FOSTER DB 1390 PG 530
101
EVA B. DECKER
DB 1426 PG 515
DB 1441 PG 506
DB 1441 PG 512
PC C SLIDE 88
102
DAVID S. DUFFEK AND WIFE, SHANNON F. DUFFEK DB 1698 PG 590
103
JOHN T. MCGUIRE DB 563 PG 116
105
CHAD DECKER AND WIFE, SONYA DECKER DB 1693 PG 934
LEWIS E. FOSTER DB 563 PG 114
JERRY DECKER TRUSTEE DB 1441 PG 510
WADE W. DECKER DB 1387 PG 954
S 10°45'14" W 143.63'
S 10°45'14" W 132.87'
S 47°02'14" W 263.0'
N 45°52'00" E 182.08'
N 84°45'00" E 133.72'
S 79°18'14" W 383.70'
S 87°53'24" E 78.24'
N 27°43'49" E 143.23'
N 21°40'44" E 234.00'
S 71°08'15" W 180.00'
S 27°46'46" E 180.00'
N 32°09'21" E 119.93'
N 87°53'25" W
WOODS
CANOPY
WOOD PLAYHOUSE
ISBKD
ISBLK
ISF BUS
ISFBUS
CONC FISH POND
CONC BLOCK DOG ENCLOSURE
CONC BLOCK DOG ENCLOSURE
WD BOOTH
36" WD
STONE FISH POND
CAN
SIGN
GR
60" CMP
66" CMP
48" CMP
72" CHL
RETAIN
RETAIN SYSTEM
PUE
DUE
R/W
EXISTING R/W
DRAIN LINE
UNABLE TO DETERMINE END
10 ", THE TOWN OF MURPHY
3/4", THE TOWN OF MURPHY
ASPHALT
CONC HW
RIMINGER CREEK
Frontier Communications of America Inc.
DECKER DR (PVT) GR
195+00
-L-
200+00
25+00
30+00
-L_DET6-
US19/129 BLAIRSVILLE HWY
US19/129 BLAIRSVILLE HWY 30' BST
26' PAVED ROADWAY
BLUE RIDGE MOUNTAIN EMS
6" BST CURB
INV=1616.84'
INV=1614.86'
18" CMP
15" CMP
DI TOP=1627.19' INV=1626.09'
INV=1624.68'
LATERAL V DITCH W/CL B RIPRAP SEE DETAIL E
11 TONS CL B RIPRAP W/28 SY GEOTEXTILE
LATERAL V DITCH SEE DETAIL B
22' (TYP.)
SP. CUT BASE DITCH W/CL B RIPRAP SEE DETAIL X
LATERAL BASE DITCH W/CL B RIPRAP SEE DETAIL G
STANDARD BASE DITCH SEE DETAIL AE
8 TONS CL B RIPRAP W/21 SY GEOTEXTILE
36" RCP-IV
30" RCP-IV (TEMPORARY)
18" TEMP
24'
D6-5
D6-6
D6-8
FS MIN ELEV. 1631.0'
RISER W/ SLATE TOP TOP=1611.53
EIP
-L_DET6- PRC Sta. 28+31.42
END CONSTRUCTION
-L_DET6- PC Sta. 31+46.03=
-L- POC Sta. 199+29.63
C
F
E

-L_DET6-

PI Sta 25+40.12
△ = 56° 23' 51.3" (LT)
D = 8° 48' 53.0"
L = 639.81'
T = 348.51'
R = 650.00'
SE = 0.06
RO = 132
DS = 45 MPH

PI Sta 29+89.61
△ = 14° 50' 09.3" (RT)
D = 4° 42' 56.5"
L = 314.61'
T = 158.19'
R = 1,215.00'
SE = 0.06
DS = 50 MPH

■—■	TEMPORARY DRAINAGE /PERMANENT DRAINAGE TO BE UTILIZED WHILE THE TEMPORARY DETOUR IS IN PLACE.
■—■	PROPOSED DRAINAGE FOR FINAL CONDITION.

NOTES:
ALL DRIVES ARE 16' WIDE WITH 10' RADII UNLESS OTHERWISE NOTED.
ALL DETOURS WILL BE REMOVED.
-DET_5- WAS REMOVED FROM THE PLANS.

FOR R/W AND EASEMENT STATIONS/OFFSETS SEE SHTS. 17 AND 18.

FOR DITCH DETAILS SEE SHT. 2D-1 & 2D-2
FOR -L_DET6- PROFILE SEE SHT. 42
FOR TRAFFIC CONTROL PLANS SEE SHTS. TMP-1 THRU TMP-56

RK&K
P: (919) 878-9560
8601 Six Forks Road, Forum 1,Suite 700
Raleigh, North Carolina 27615-3960
NC License No. F-0112
Engineers | Construction Managers | Planners | Scientists
www.rkk.com
Responsive People | Creative Solutions

PROJECT REFERENCE NO.	SHEET NO.
R-5861	2C-1

STATE OF
NORTH CAROLINA
DEPT. OF TRANSPORTATION
DIVISION OF HIGHWAYS
RALEIGH, N.C.

ROADWAY DETAIL DRAWING FOR
GUARDRAIL INSTALLATION

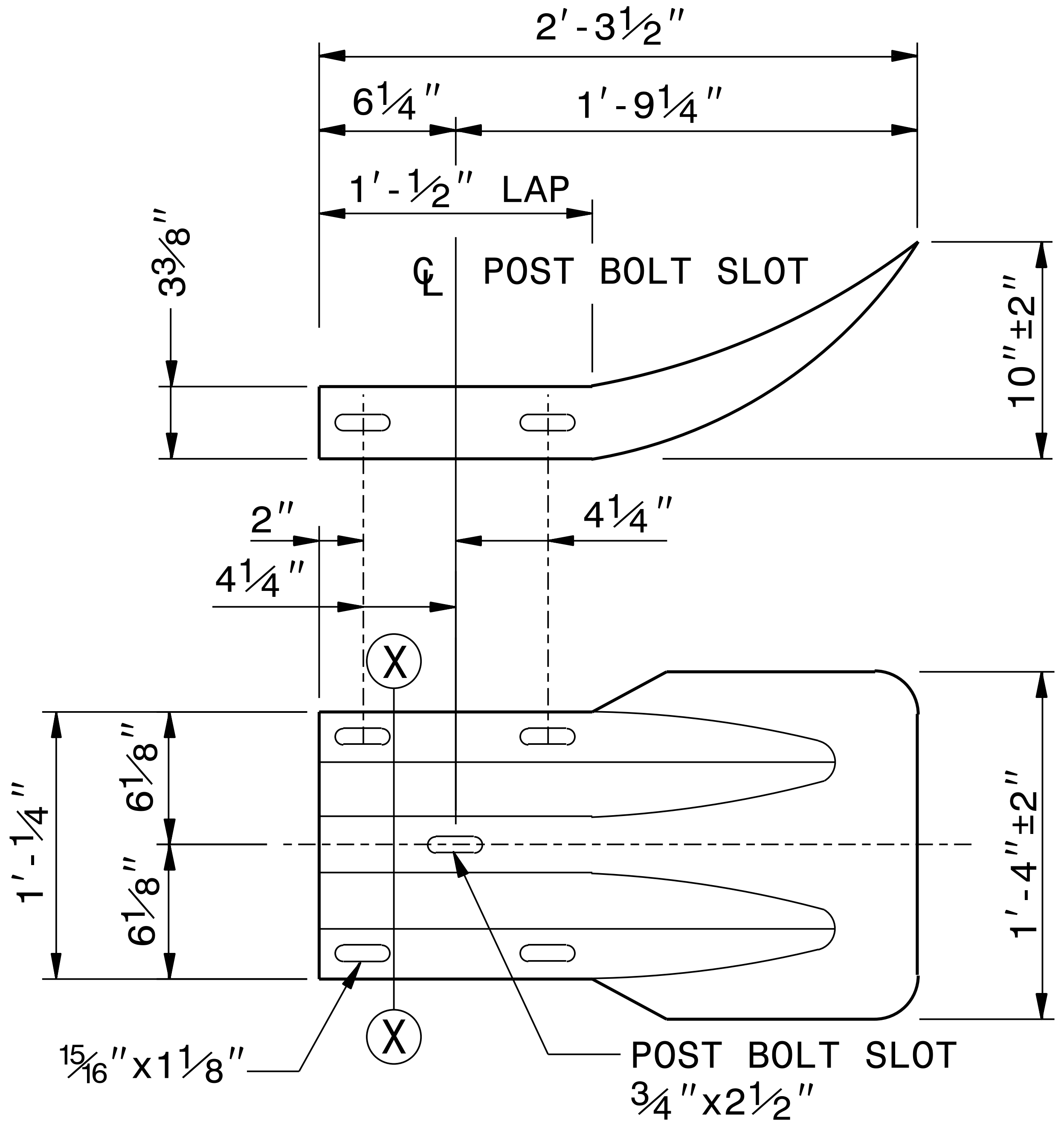
2'-3½"
6¼"
1'-9¼"
1'-½" LAP
3⅜"
℄ POST BOLT SLOT
10"±2"
2"
4¼"
4¼"
X
1'-1¼"
6⅛"
6⅛"
1'-4"±2"
X
15/16"x1⅛"
POST BOLT SLOT
¾"x2½"

TERMINAL END SECTION

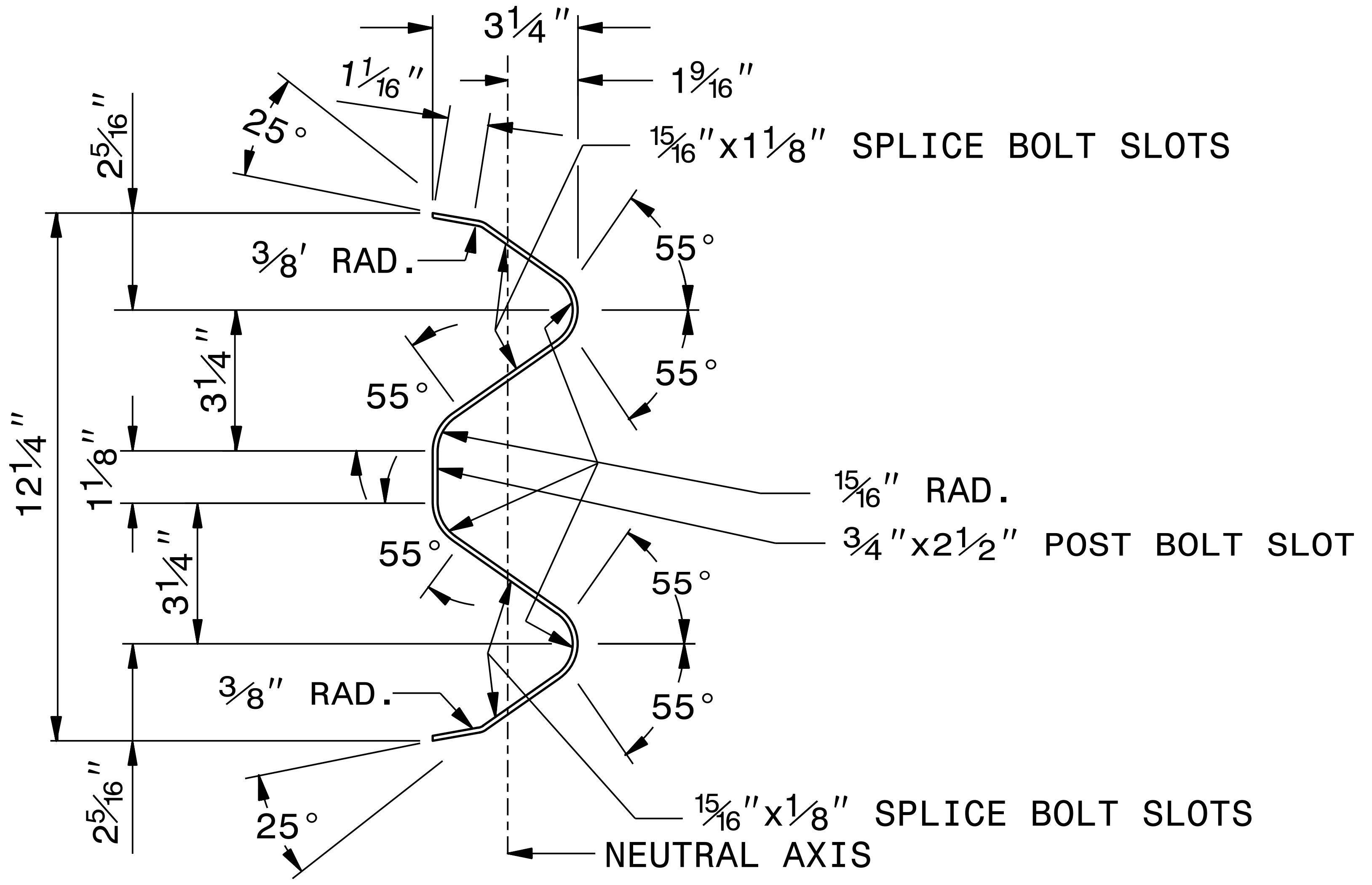
3¼"
1 1/16"
1 9/16"
25°
2 5/16"
15/16"x1⅛" SPLICE BOLT SLOTS
⅜' RAD.
55°
55°
3¼"
55°
12¼"
1⅛"
15/16" RAD.
¾"x2½" POST BOLT SLOT
55°
55°
3¼"
⅜" RAD.
55°
2 5/16"
25°
15/16"x⅛" SPLICE BOLT SLOTS
NEUTRAL AXIS

SECTION X-X

SYSTEM PARTS - GENERAL USE

SHEET OF
862D02

STATE OF
NORTH CAROLINA
DEPT. OF TRANSPORTATION
DIVISION OF HIGHWAYS
RALEIGH, N.C.

ROADWAY DETAIL DRAWING FOR
GUARDRAIL INSTALLATION

SHEET OF
862D02

DOCUMENT NOT CONSIDERED FINAL
UNLESS ALL SIGNATURES COMPLETED

DocuSigned by:
Nicole M. Hackler
5884323D34164C5...
10/6/2023

SEAL
33144
NICOLE M. HACKLER

CONTRACTS STANDARDS AND
DEVELOPMENT UNIT
Office 919-707-6950 FAX 919-250-4119

SEE TITLE BLOCK

ORIGINAL BY: K A KEMPF DATE: 3/07/23
MODIFIED BY: DATE:
CHECKED BY: DATE:
FILE SPEC.: kkempf/english/Terminal End Section.dgn

07-MAR-2023 16:51
.\Terminal End Section.dgn
kkempf AT CSD-320967

PROJECT REFERENCE NO.	SHEET NO.
R-5861	2C-2

DOCUMENT NOT CONSIDERED FINAL UNLESS ALL SIGNATURES COMPLETED

STATE OF
NORTH CAROLINA
DEPT. OF TRANSPORTATION
DIVISION OF HIGHWAYS
RALEIGH, N.C.

ROADWAY DETAIL DRAWING FOR
GUARDRAIL INSTALLATION

SHEET 6 OF 8
862D02

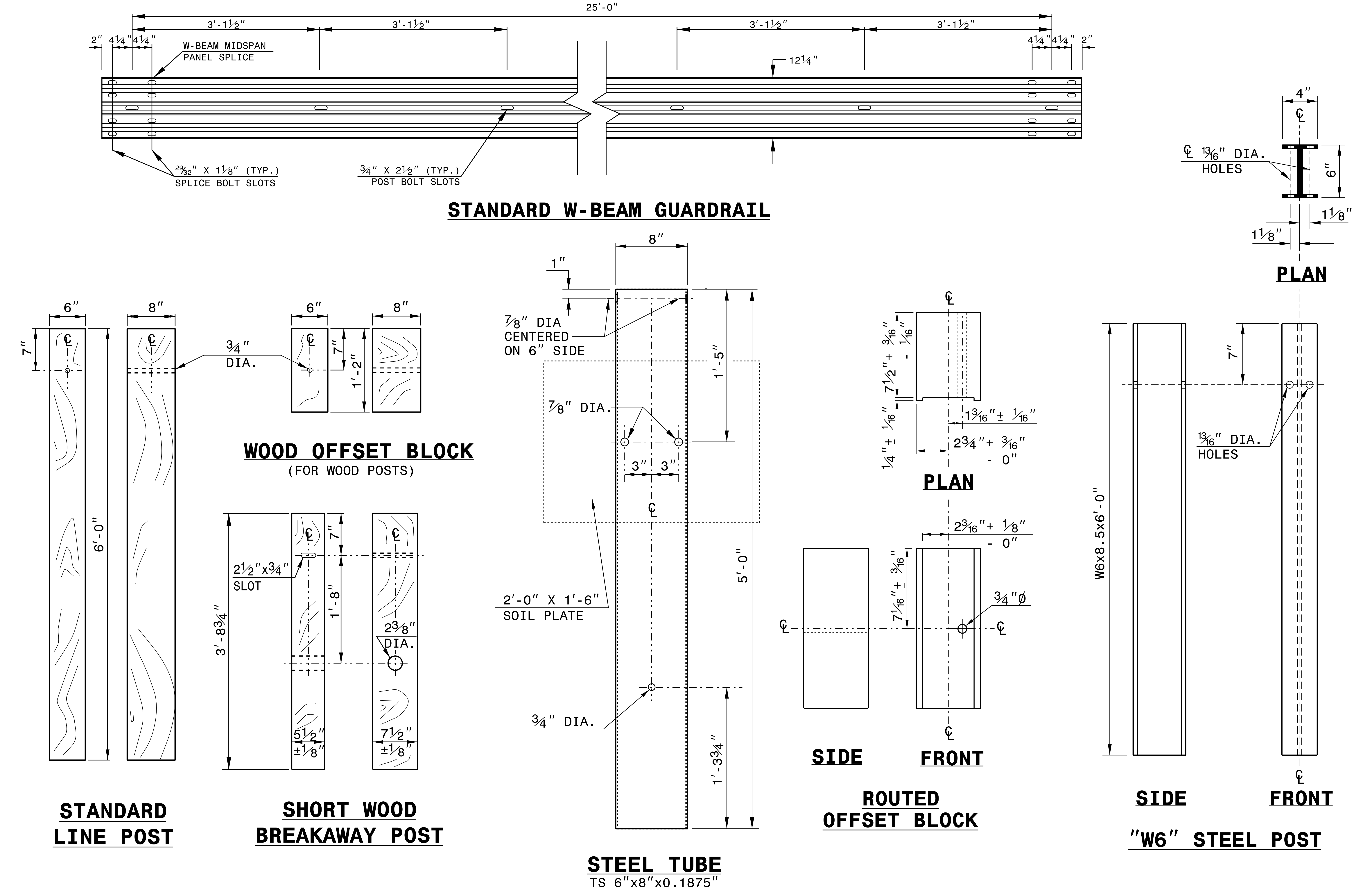

STANDARD W-BEAM GUARDRAIL

WOOD OFFSET BLOCK
(FOR WOOD POSTS)

STANDARD LINE POST

SHORT WOOD BREAKAWAY POST

STEEL TUBE
TS 6"x8"x0.1875"

ROUTED OFFSET BLOCK

"W6" STEEL POST

25'-0"
3'-1½"
3'-1½"
3'-1½"
3'-1½"
2"
4¼"
4¼"
4¼"
4¼"
2"
W-BEAM MIDSPAN PANEL SPLICE
12¼"
29/32" X 1⅛" (TYP.) SPLICE BOLT SLOTS
¾" X 2½" (TYP.) POST BOLT SLOTS
6"
8"
7"
℄
6'-0"
¾" DIA.
6"
8"
7"
1'-2"
3'-8¾"
2½"x¾" SLOT
7"
1'-8"
2⅜" DIA.
5½" ±⅛"
7½" ±⅛"
8"
1"
⅞" DIA CENTERED ON 6" SIDE
1'-5"
⅞" DIA.
3"
3"
2'-0" X 1'-6" SOIL PLATE
5'-0"
¾" DIA.
1'-3¾"
PLAN
7½" + 3/16" - 1/16"
1¼" ± 1/16"
1 3/16" ± 1/16"
2¾" + 3/16" - 0"
SIDE
FRONT
2 3/16" + ⅛" - 0"
7 1/16" ± 3/16"
¾"Ø
PLAN
4"
13/16" DIA. HOLES
6"
1⅛"
1⅛"
W6x8.5x6'-0"
7"
13/16" DIA. HOLES
SIDE
FRONT

SYSTEM PARTS

STATE OF
NORTH CAROLINA
DEPT. OF TRANSPORTATION
DIVISION OF HIGHWAYS
RALEIGH, N.C.

ROADWAY DETAIL DRAWING FOR
GUARDRAIL INSTALLATION

SHEET 6 OF 8
862D02

SEAL 33144
NICOLE M. HACKLER
DocuSigned by:
Nicole M. Hackler
5884323D34164C5
10/6/2023

CONTRACTS STANDARDS AND DEVELOPMENT UNIT
Office 919-707-6950 FAX 919-250-4119

SEE TITLE BLOCK

ORIGINAL BY: J.HOWERTON DATE: 3-7-2018
MODIFIED BY: DATE:
CHECKED BY: DATE:
FILE SPEC.:

PROJECT REFERENCE NO.	SHEET NO.
R-5861	2C-3

STATE OF
NORTH CAROLINA
DEPT. OF TRANSPORTATION
DIVISION OF HIGHWAYS
RALEIGH, N.C.

ROADWAY DETAIL DRAWING FOR
GUARDRAIL INSTALLATION

SHEET OF

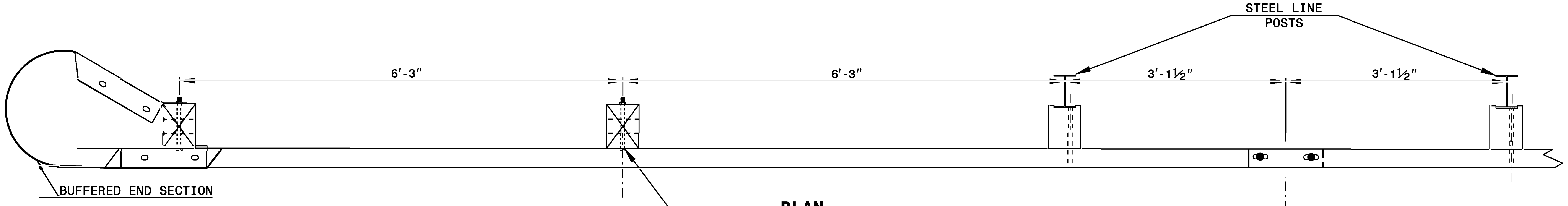
STEEL LINE POSTS
6'-3"
6'-3"
3'-1½"
3'-1½"
BUFFERED END SECTION

PLAN

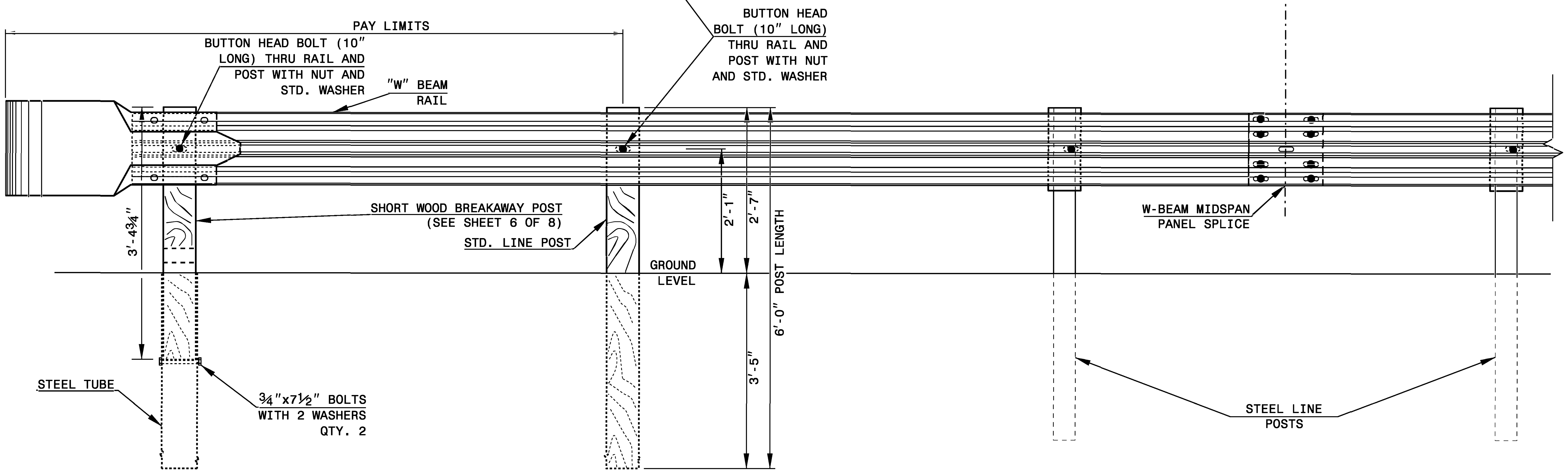
BUTTON HEAD BOLT (10" LONG) THRU RAIL AND POST WITH NUT AND STD. WASHER
PAY LIMITS
BUTTON HEAD BOLT (10" LONG) THRU RAIL AND POST WITH NUT AND STD. WASHER
"W" BEAM RAIL
SHORT WOOD BREAKAWAY POST (SEE SHEET 6 OF 8)
STD. LINE POST
3'-4¾"
2'-1"
2'-7"
6'-0" POST LENGTH
GROUND LEVEL
3'-5"
W-BEAM MIDSPAN PANEL SPLICE
STEEL TUBE
¾"x7½" BOLTS WITH 2 WASHERS QTY. 2
STEEL LINE POSTS

ELEVATION

TRAILING END UNIT ASSEMBLY

A.T.-1 SYSTEM

SEAL 33144
10/6/2023

DOCUMENT NOT CONSIDERED FINAL UNLESS ALL SIGNATURES COMPLETED

CONTRACTS STANDARDS AND DEVELOPMENT UNIT
Office 919-707-6950 FAX 919-250-4119

A.T.-1 SYSTEM

ORIGINAL BY:______ DATE:______
MODIFIED BY:______ DATE:______
CHECKED BY:______ DATE:______
FILE SPEC.:______

01-MAR-2018 07:39
S:\Contracts\Contracts\Special Details\ericward\usr\details\stand\840d17 Extra Depth 2GI.dgn
jhowerton AT CSD-292595

PROJECT REFERENCE NO.	SHEET NO.
R-5861	2C-4

STATE OF
NORTH CAROLINA
DEPT. OF TRANSPORTATION
DIVISION OF HIGHWAYS
RALEIGH, N.C.

ENGLISH DETAIL DRAWING FOR

CONCRETE MEDIAN DROP INLET TYPE 'A' EXTRA DEPTH OVER 12' TO 25'

12" THRU 72" PIPE

SHEET 1 OF 2
840D17

STATE OF
NORTH CAROLINA
DEPT. OF TRANSPORTATION
DIVISION OF HIGHWAYS
RALEIGH, N.C.

ENGLISH DETAIL DRAWING FOR
CONCRETE MEDIAN DROP INLET TYPE 'A' EXTRA DEPTH OVER 12' TO 25'
12" THRU 72" PIPE

SHEET 1 OF 2
840D17

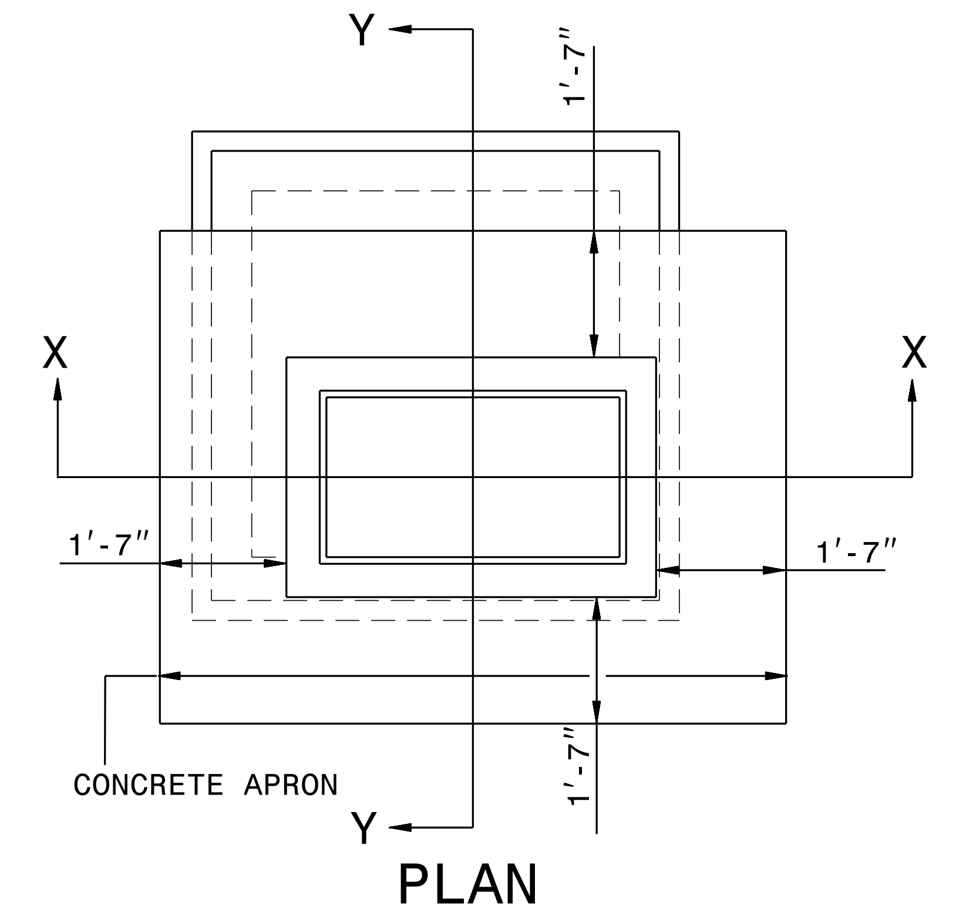
Y
X
X
1'-7"
1'-7"
1'-7"
1'-7"
CONCRETE APRON
Y

PLAN

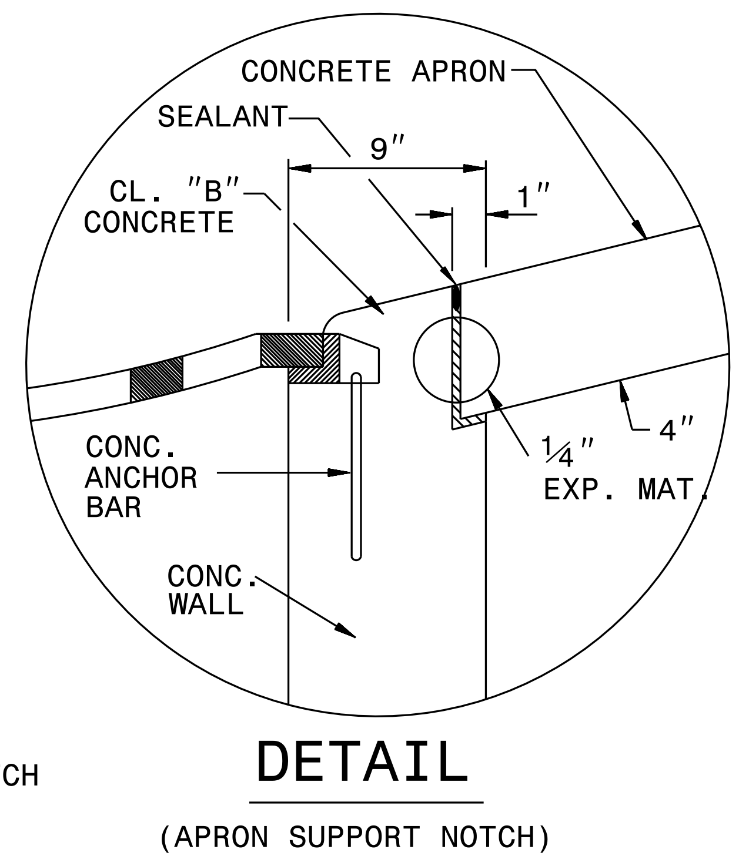
CONCRETE APRON
SEALANT
9"
1"
CL. "B" CONCRETE
CONC. ANCHOR BAR
CONC. WALL
¼" EXP. MAT.
4"

DETAIL

(APRON SUPPORT NOTCH)

GENERAL NOTES:

USE CLASS "B" CONCRETE THROUGHOUT.

PROVIDE DROP INLETS WITH STEPS 12" ON CENTER. USE STEPS WHICH COMPLY WITH STD. DRAWING 840.66.

OPTIONAL CONSTRUCTION - MONOLITHIC POUR, 2" KEYWAY, OR #4 BAR DOWELS AT 12" CENTERS AS DIRECTED BY THE ENGINEER.

USE FORMS FOR THE CONSTRUCTION OF THE BOTTOM SLAB.

IF REINFORCED CONCRETE PIPE IS SET IN BOTTOM SLAB OF BOX, ADD TO SLAB AS SHOWN ON STD. NO. 840.00.

WHEN PAYMENT FOR THE DROP INLET IS MADE ON A PER EACH BASIS, THE CONCRETE APRON WILL BE CONSIDERED PART OF THE DROP INLET.

CONSTRUCT WITH PIPE CROWNS MATCHING.

USE STANDARD FRAMES AND GRATES 840.22 (SHOWN), 840.24(SHOWN), 840.20, 840.29, AND 840.33.

SEE STANDARD DRAWING 840.25 FOR ATTACHMENT OF FRAMES AND GRATES NOT SHOWN.

CHAMFER ALL EXPOSED CORNERS 1".

DRAWING NOT TO SCALE.

MAX. DEPTH OF THIS STRUCTURE FROM TOP OF BOTTOM SLAB TO TOP ELEVATION IS 25 FEET.

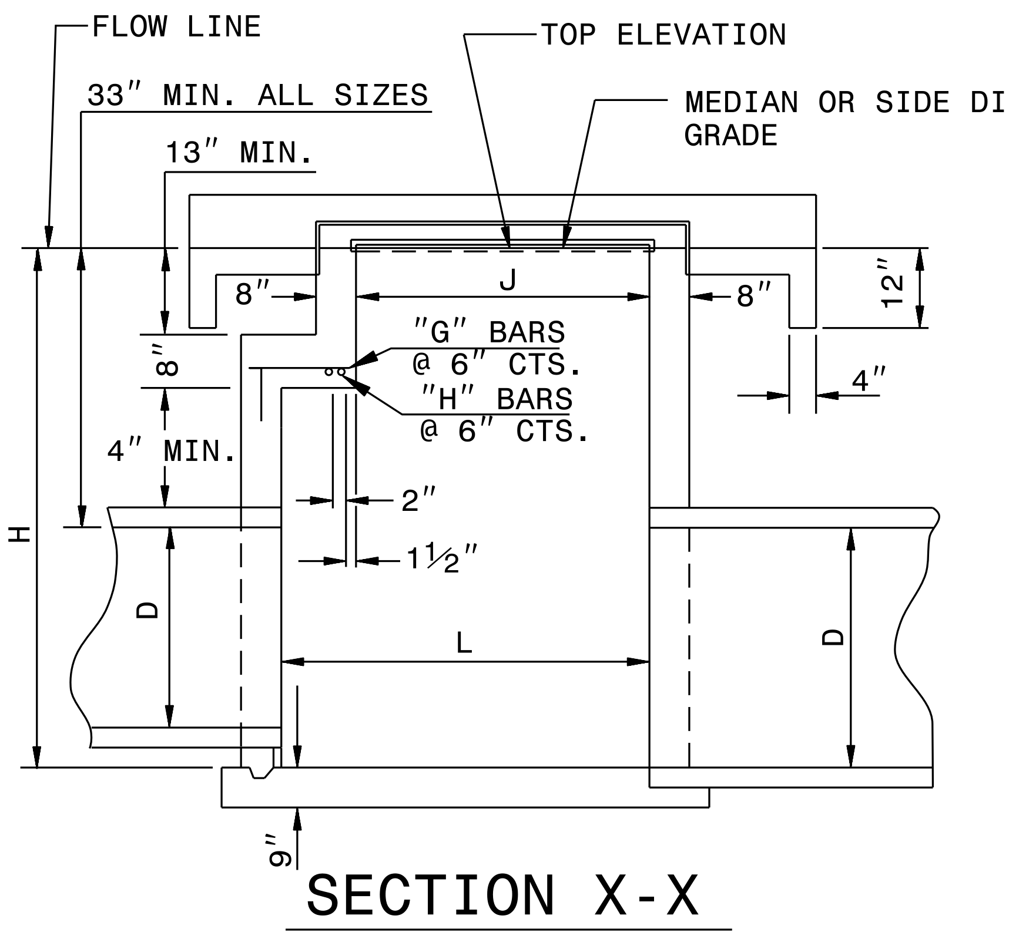
FLOW LINE
TOP ELEVATION
33" MIN. ALL SIZES
MEDIAN OR SIDE DITCH GRADE
13" MIN.
8"
J
8"
12"
8"
"G" BARS @ 6" CTS.
"H" BARS @ 6" CTS.
4"
4" MIN.
2"
1½"
H
D
L
D
9"

SECTION X-X

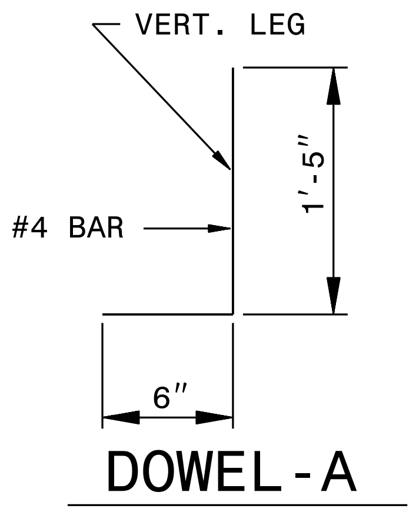
VERT. LEG
#4 BAR
1'-5"
6"

DOWEL-A

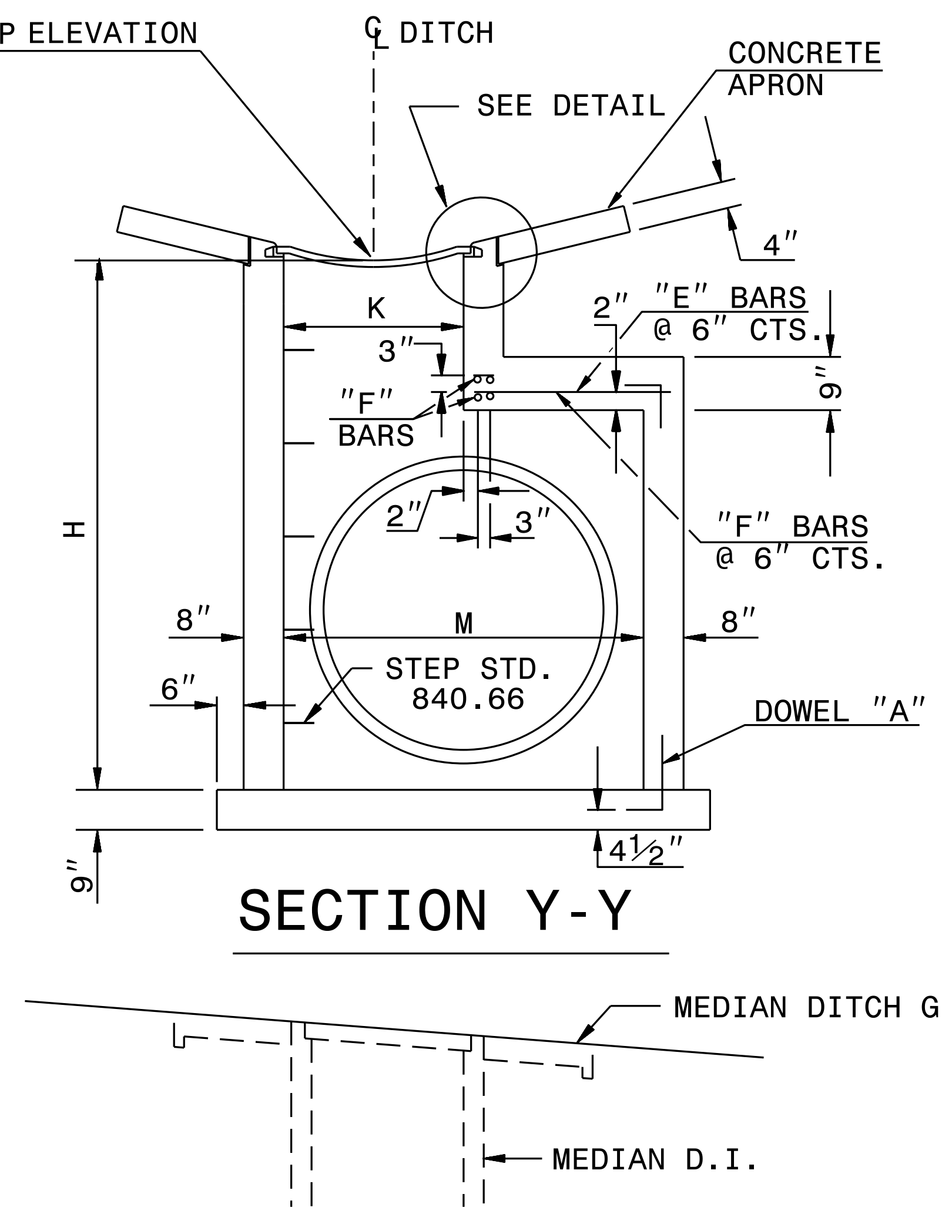
TOP ELEVATION
CL DITCH
SEE DETAIL
CONCRETE APRON
4"
K
2" "E" BARS @ 6" CTS.
3"
"F" BARS
9"
H
2"
3"
"F" BARS @ 6" CTS.
8"
M
8"
6"
STEP STD. 840.66
DOWEL "A"
4½"
9"
MEDIAN DITCH GRADE
MEDIAN D.I.

SECTION Y-Y

STATE OF
NORTH CAROLINA
DEPT. OF TRANSPORTATION
DIVISION OF HIGHWAYS
RALEIGH, N.C.

ENGLISH DETAIL DRAWING FOR

CONCRETE MEDIAN DROP INLET TYPE 'A' EXTRA DEPTH OVER 12' TO 25'

12" THRU 72" PIPE

SHEET 2 OF 2
840D17

STATE OF
NORTH CAROLINA
DEPT. OF TRANSPORTATION
DIVISION OF HIGHWAYS
RALEIGH, N.C.

ENGLISH DETAIL DRAWING FOR
CONCRETE MEDIAN DROP INLET TYPE 'A' EXTRA DEPTH OVER 12' TO 25'
12" THRU 72" PIPE

SHEET 2 OF 2
840D17

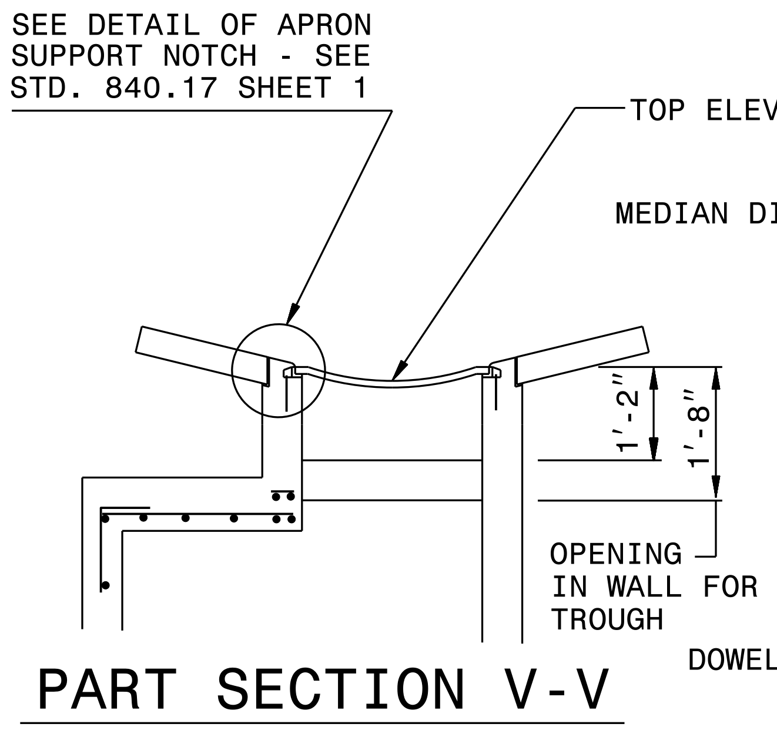
SEE DETAIL OF APRON SUPPORT NOTCH - SEE STD. 840.17 SHEET 1
1'-2"
1'-8"
OPENING IN WALL FOR TROUGH

PART SECTION V-V

DOWEL B¹,B² OR B³

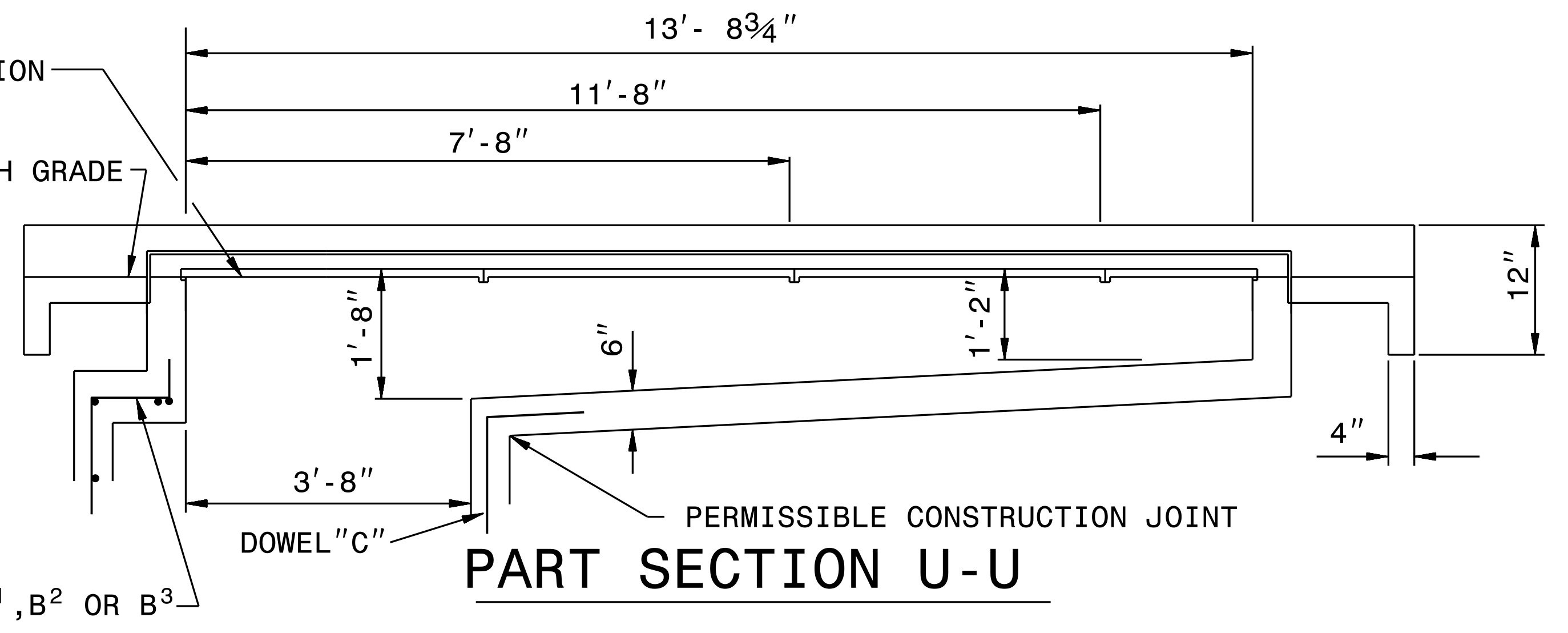
TOP ELEVATION
MEDIAN DITCH GRADE
13'- 8¾"
11'-8"
7'-8"
1'-8"
6"
1'-2"
12"
4"
3'-8"
DOWEL"C"
PERMISSIBLE CONSTRUCTION JOINT

PART SECTION U-U

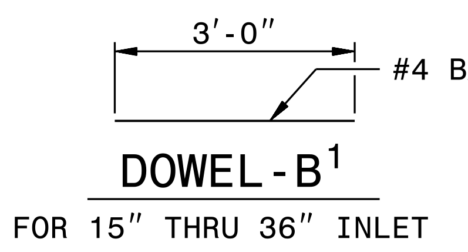

DOWEL-B¹

FOR 15" THRU 36" INLET

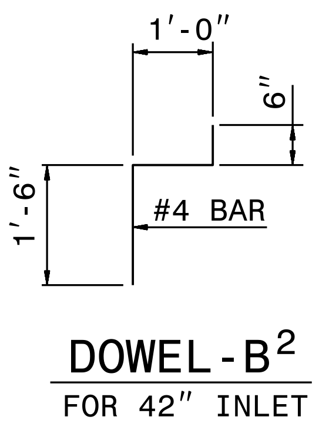

DOWEL-B²

FOR 42" INLET

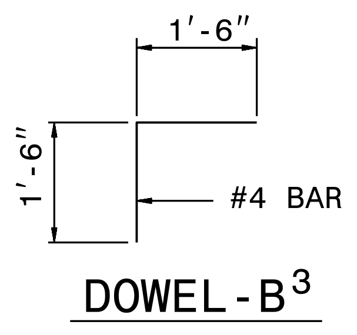

DOWEL-B³

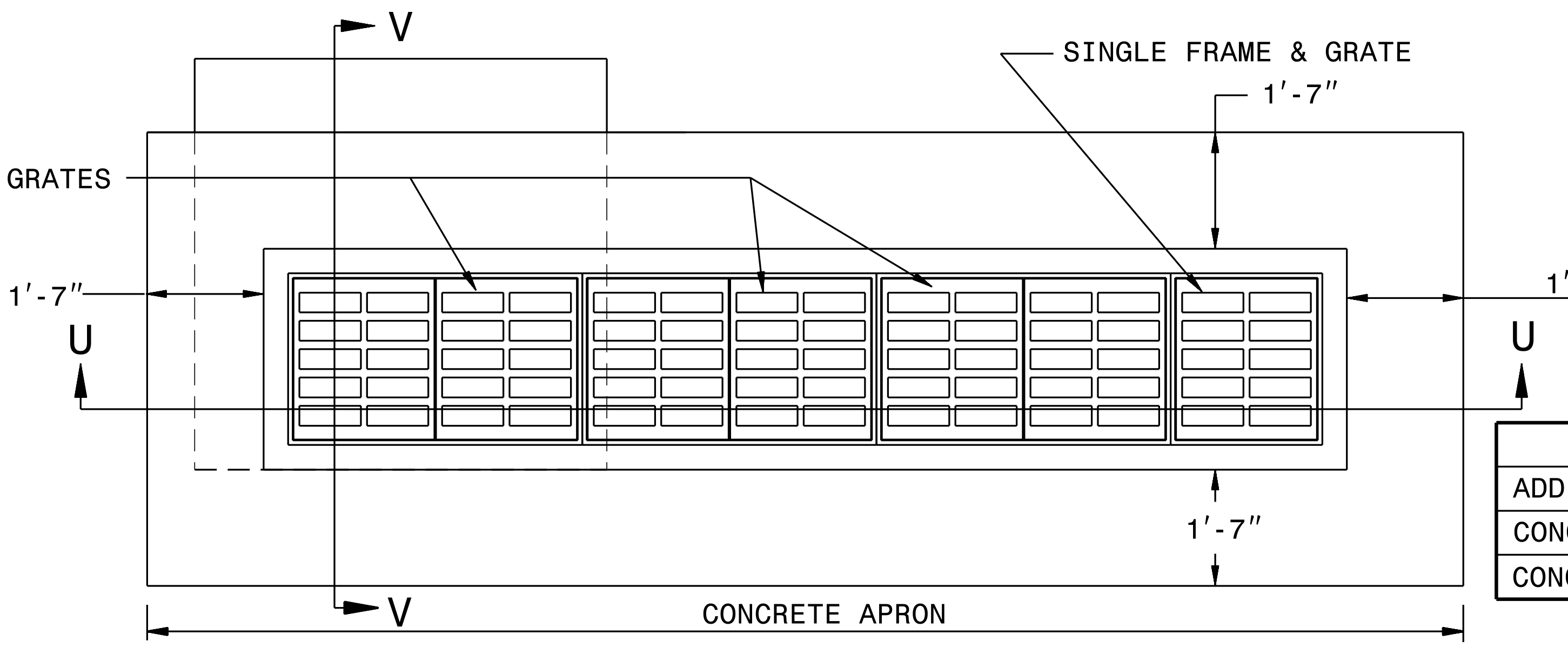
V
SINGLE FRAME & GRATE
1'-7"
DOUBLE FRAME & GRATES
1'-7"
1'-7"
U
U
1'-7"
V
CONCRETE APRON

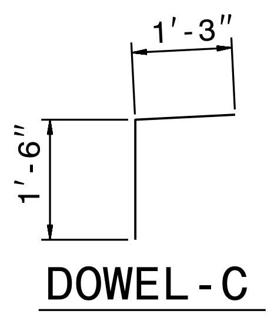

DOWEL-C

QUANTITY TO BE ADDED FOR EACH 2' INCREMENT INLET OPENING						
ADDITIONAL INLETS	2'-0"	4'-0"	6'-0"	8'-0"	10'-0"	12'-0"
CONCRETE CU. YDS.	0.191	0.417	0.665	0.897	1.145	1.380
CONCRETE APRON CU. YDS.	0.074	0.148	0.222	0.296	0.370	0.444

MIN. DIMENSIONS AND QUANTITIES FOR CONCRETE GRATED DROP INLET(BASED ON MIN. HEIGHT, H)

DIMENSIONS OF BOX AND PIPE						REINFORCING STEEL - NO. 4 BARS									CU YDS CONC. IN BOX					DEDUCTIONS FOR ONE PIPE	
PIPE	SPAN	WIDTH	SPAN	WIDTH	HEIGHT	BARS E		BARS F		BARS G		BARS H		TOTAL	BOTTOM SLAB	H TOTAL	H PER FT HT	APRON	TOTAL		
D	J	K	L	M	H	NO.	LENGTH	NO.	LENGTH	NO.	LENGTH	NO.	LENGTH	LBS.						C.S.	R.C.
12"	3'-8"	2'-0"	3'-8"	2'-0"	3'-9"	—	—	—	—	—	—	—	—	—	0.362	0.926	0.247	0.395	1.683	0.015	0.024
15"	3'-8"	2'-0"	3'-8"	2'-0"	4'-0"	—	—	—	—	—	—	—	—	—	0.362	0.988	0.247	0.395	1.745	0.023	0.036
18"				2'-0"	4'-3"	—	—	—	—	—	—	—	—	—	0.362	1.050	0.247		1.807	0.033	0.049
24"				2'-10"	4'-9"	8	1'-5"	6	4'-9"	—	—	—	—	27	0.444	1.362	0.278		2.201	0.059	0.085
30"			3'-8"	3'-5"	5'-3"	8	2'-0"	7	4'-9"	—	—	—	—	33	0.502	1.644	0.288		2.541	0.092	0.127
36"			4'-0"	4'-0"	5'-9"	8	2'-5"	8	4'-11"	4	0'-9"	2	4'-11"	47	0.560	1.931	0.321		2.920	0.132	0.178
42"			4'-10"	4'-10"	6'-3"	10	3'-1"	9	5'-7"		1'-5"	3	5'-7"	67	0.704	2.500	0.370		3.677	0.180	0.243
48"			5'-4"	5'-4"	6'-9"	11	3'-7"	10	6'-1"		1'-11"	4	6'-1"	87	0.823	3.013	0.407		4.315	0.235	0.317
54"			6'-0"	6'-0"	7'-3"	12	4'-1"	11	6'-7"		2'-5"	5	6'-7"	107	0.951	3.589	0.444		5.072	0.297	0.401
60"			6'-6"	6'-6"	7'-9"	13	4'-9"	12	7'-3"		3'-1"	6	7'-3"	135	1.311	4.539	0.494		6.170	0.367	0.495
66"			7'-2"	7'-2"	8'-3"	14	5'-4"	14	7'-10"		3'-7"	7	7'-10"	168	1.136	5.061	0.537		6.901	0.444	0.599
72"	3'-8"	2'-0"	7'-8"	7'-8"	8'-9"	15	5'-11"	15	8'-5"	4	4'-3"	8	8'-5"	199	1.500	5.860	0.580	0.395	7.868	0.528	0.713

DocuSigned by:
Nicole
5884323D34164C5...
SEAL 33144
10/6/2023

DOCUMENT NOT CONSIDERED FINAL UNLESS ALL SIGNATURES COMPLETED

CONTRACT STANDARDS
AND DEVELOPMENT UNIT
Office 919-707-6950 FAX 919-250-4119

SEE PLATE FOR TITLE

ORIGINAL BY: 2002 STD.840.17 DATE:
MODIFIED BY: K.A. KEMPF DATE: 07-06-09
CHECKED BY: DATE:
FILE SPEC.: /stand/840d17 Extra Depth 2GI.dgn

STATE OF
NORTH CAROLINA
DEPT. OF TRANSPORTATION
DIVISION OF HIGHWAYS
RALEIGH, N.C.

ROADWAY DETAIL DRAWING FOR
CONCRETE JUNCTION BOX
(WITH OPTIONAL MANHOLE)
UP TO 30' IN HEIGHT

SHEET 1 OF 1
840D31

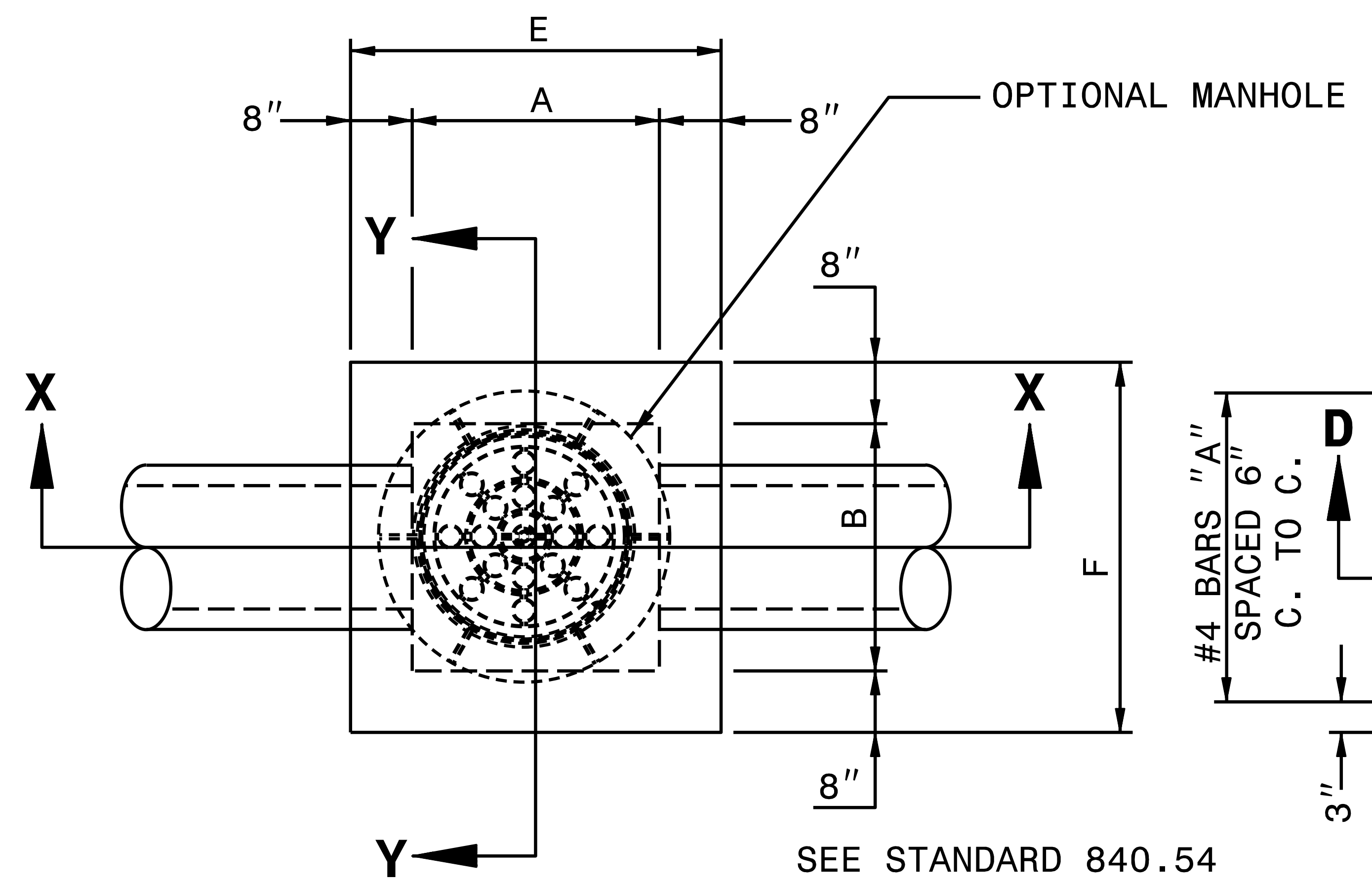

E
8"
A
8"
OPTIONAL MANHOLE
Y
8"
X
X
B
F
8"
Y

PLAN

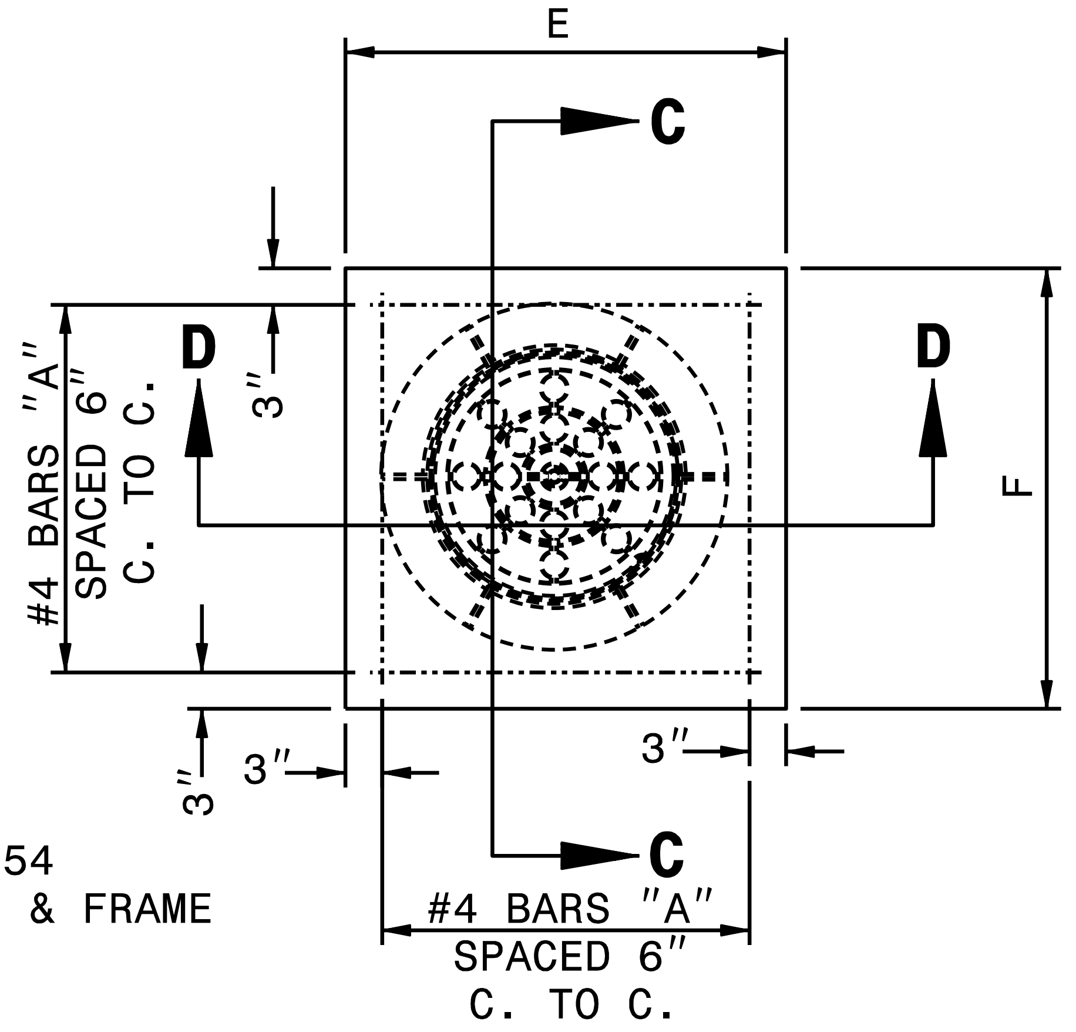

E
C
D
D
#4 BARS "A" SPACED 6" C. TO C.
3"
F
3"
3"
3"
C
#4 BARS "A" SPACED 6" C. TO C.

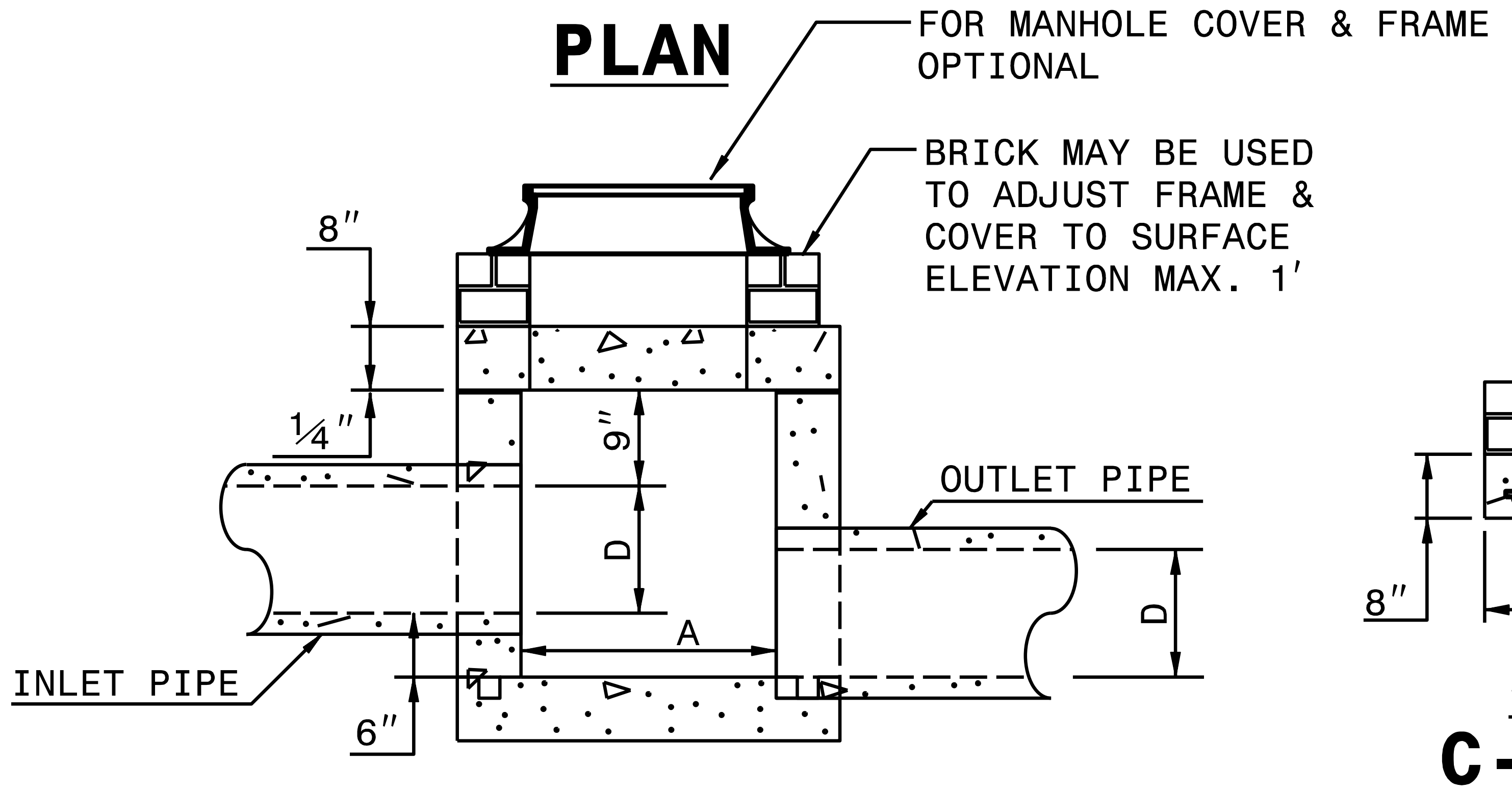

SEE STANDARD 840.54
FOR MANHOLE COVER & FRAME
OPTIONAL
BRICK MAY BE USED
TO ADJUST FRAME &
COVER TO SURFACE
ELEVATION MAX. 1'
8"
¼"
9"
D
OUTLET PIPE
A
D
INLET PIPE
6"

SECTION X-X

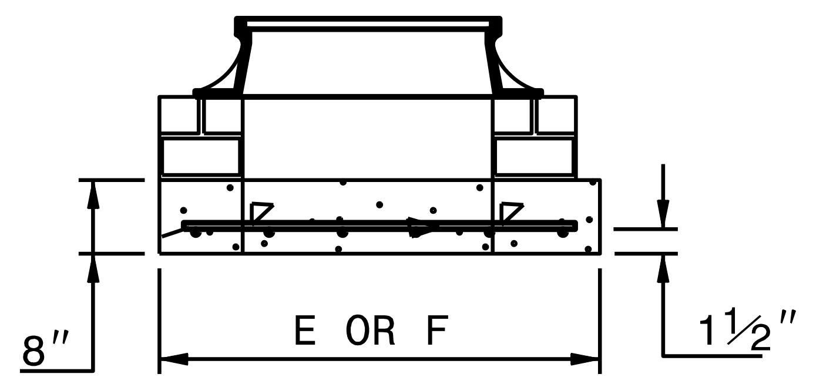

SECTION C-C OR D-D

GENERAL NOTES:

CHAMFER ALL EXPOSED CORNERS 1".

USE CLASS "B" CONCRETE THROUGHOUT.

OPTIONAL CONSTRUCTION - MONOLITHIC POUR, 2" KEYWAY, OR #4 BAR DOWELS AT 12" CENTERS AS DIRECTED BY THE ENGINEER.

USE FORMS TO CONSTRUCT THE BOTTOM SLAB.

IF REINFORCED CONCRETE PIPE IS SET IN BASE SLAB OF BOX, ADD TO BASE AS SHOWN ON STANDARD NO. 840.00.

PROVIDE ALL JUNCTION BOXES OVER 3'-6" IN DEPTH WITH STEPS 12" ON CENTERS IN ACCORDANCE WITH STD. NO. 840.66.

ADJUST THE STEEL, CONCRETE AND BRICK MASONRY QUANTITIES TO INCLUDE THE ADDITION OF THE MANHOLE (I.E. DIAGONAL BARS SHORTENED AROUND OPENING IN TOP SLAB, ADDITIONAL VARIABLE HEIGHT BRICK MASONRY, OPENING IN TOP SLAB.)

MAX. DEPTH OF THIS STRUCTURE FROM TOP OF BOTTOM SLAB TO TOP ELEVATION IS 25 FEET.

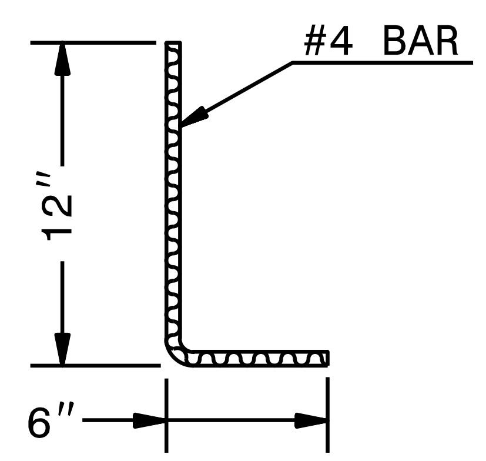

DOWEL

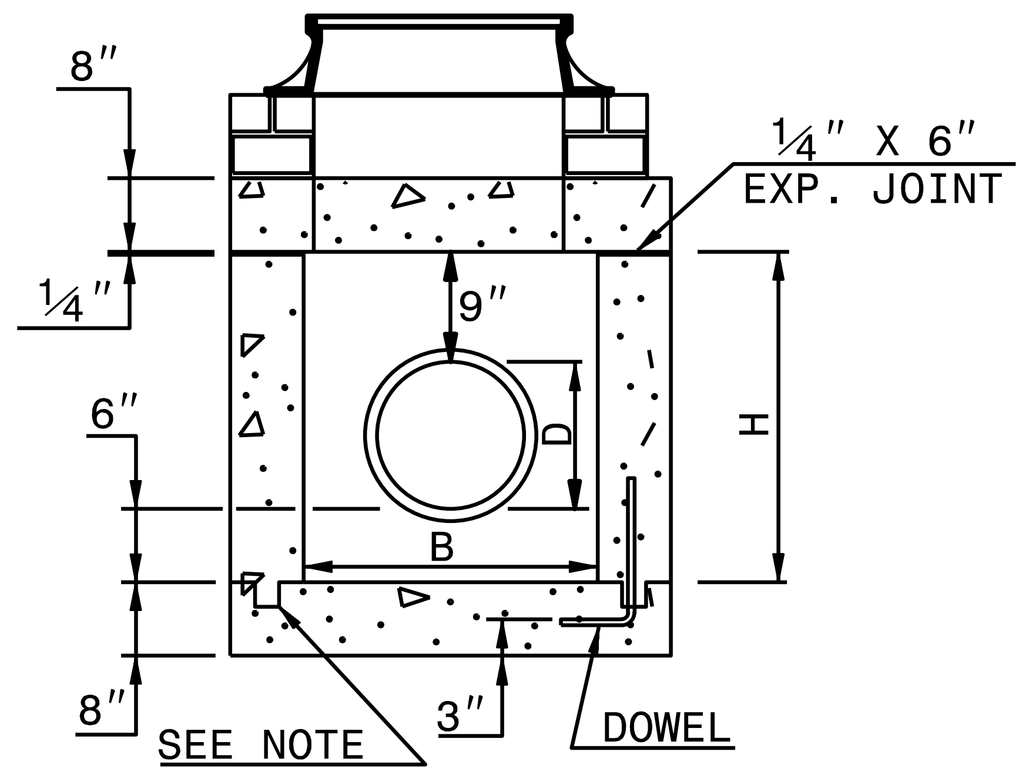

8"
¼" X 6"
EXP. JOINT
¼"
9"
6"
D
H
B
8"
SEE NOTE
3"
DOWEL

SECTION Y-Y

DIMENSIONS AND QUANTITIES FOR CONCRETE JUNCTION BOXES

DIMENSIONS OF BOX AND PIPE				REINFORCEMENT BARS "A"		TOP SLAB DIMENSIONS		CUBIC YARDS IN BOX			TOTAL QUANTITIES BOX AND SLABS		DEDUCTIONS FOR ONE PIPE CU.YDS.	
PIPE	SPAN	WIDTH	HEIGHT											
D	A	B	H	NO.	LENGTH	E	F	TOP SLAB	BOTTOM SLAB	WALL/ FT. OF HT.	LBS. REINF	CU. YDS. MIN. "H"	C.S.	R.C.
12"	2'-0"	2'-0"	2'-3"	12	2'-9"	3'-0"	3'-0"	0.222	0.222	0.246	22	0.998	0.015	0.024
15"	2'-3"	2'-3"	2'-6"	12	3'-0"	3'-3"	3'-3"	0.261	0.261	0.271	24	1.200	0.023	0.036
18"	2'-6"	2'-6"	2'-9"	14	3'-3"	3'-6"	3'-6"	0.302	0.302	0.295	30	1.416	0.033	0.049
24"	3'-0"	3'-0"	3'-3"	16	3'-9"	4'-0"	4'-0"	0.394	0.394	0.344	40	1.907	0.059	0.085
30"	3'-6"	3'-6"	3'-9"	18	4'-3"	4'-6"	4'-6"	0.499	0.499	0.394	51	2.474	0.092	0.127
36"	4'-0"	4'-0"	4'-3"	20	4'-9"	5'-0"	5'-0"	0.616	0.616	0.443	64	3.114	0.132	0.178
42"	4'-6"	4'-6"	4'-9"	22	5'-3"	5'-6"	5'-6"	0.745	0.745	0.492	77	3.828	0.180	0.243
48"	5'-4"	5'-4"	5'-3"	26	6'-3"	6'-4"	6'-4"	0.988	0.988	0.541	111	4.819	0.235	0.317
54"	5'-10"	5'-10"	5'-9"	28	6'-7"	6'-10"	6'-10"	1.150	1.150	0.591	126	5.696	0.297	0.401
60"	6'-6"	6'-6"	6'-3"	30	7'-3"	7'-6"	7'-6"	1.386	1.386	0.640	145	6.770	0.367	0.495
66"	7'-1"	7'-1"	6'-9"	32	7'-10"	8'-1"	8'-1"	1.609	1.609	0.689	169	7.870	0.444	0.589

STATE OF
NORTH CAROLINA
DEPT. OF TRANSPORTATION
DIVISION OF HIGHWAYS
RALEIGH, N.C.

ROADWAY DETAIL DRAWING FOR
CONCRETE JUNCTION BOX
(WITH OPTIONAL MANHOLE)
UP TO 30' IN HEIGHT

SHEET 1 OF 1
840D31

SEAL
33144
NICOLE M. HACKLER

DocuSigned by:
Nicole M. Hackler
5884323D34164C5...
10/6/2023

DOCUMENT NOT CONSIDERED FINAL
UNLESS ALL SIGNATURES COMPLETED

**CONTRACT STANDARDS
AND DEVELOPMENT UNIT**
Office 919-707-6950 FAX 919-250-4119

SEE PLATE FOR TITLE

ORIGINAL BY: J. HOWERTON DATE: 12/30/19
MODIFIED BY: DATE:
CHECKED BY: DATE:
FILE SPEC.: jhowerton/840d31 up to 30ft of fill.dgn

$$$$$$SYSTIME$$$$$
$$$$$$$$$$$$$$$$$$$$DGN$$$$$$$$$$$$$$$$
$$$$$USERNAME$$$$

PROJECT REFERENCE NO.	SHEET NO.
R-5861	2C-6

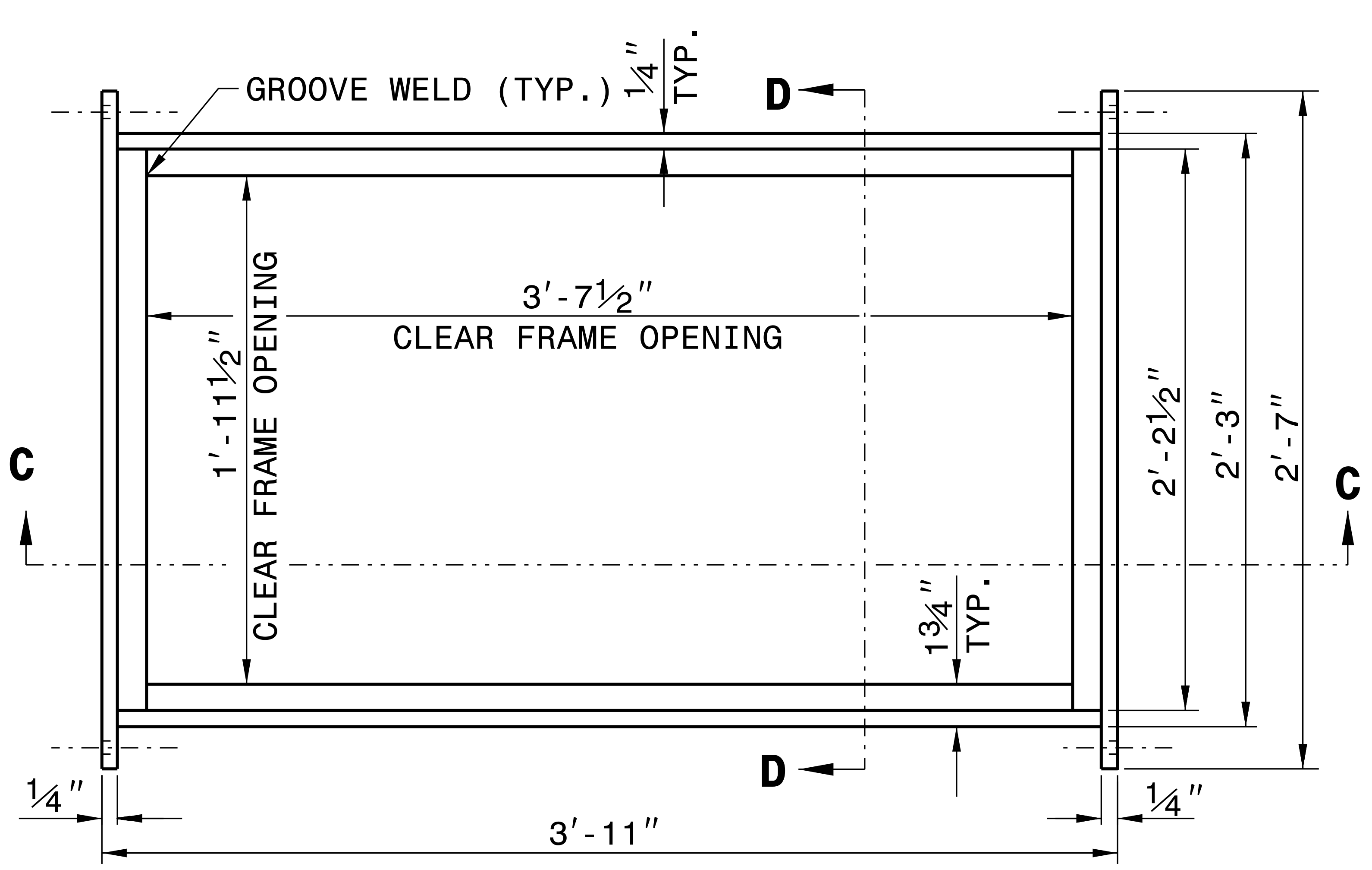
GROOVE WELD (TYP.)
¼" TYP.
D
3'-7½"
CLEAR FRAME OPENING
1'-11½"
CLEAR FRAME OPENING
C
C
2'-2½"
2'-3"
2'-7"
1¾" TYP.
D
¼"
3'-11"
¼"

PLAN VIEW

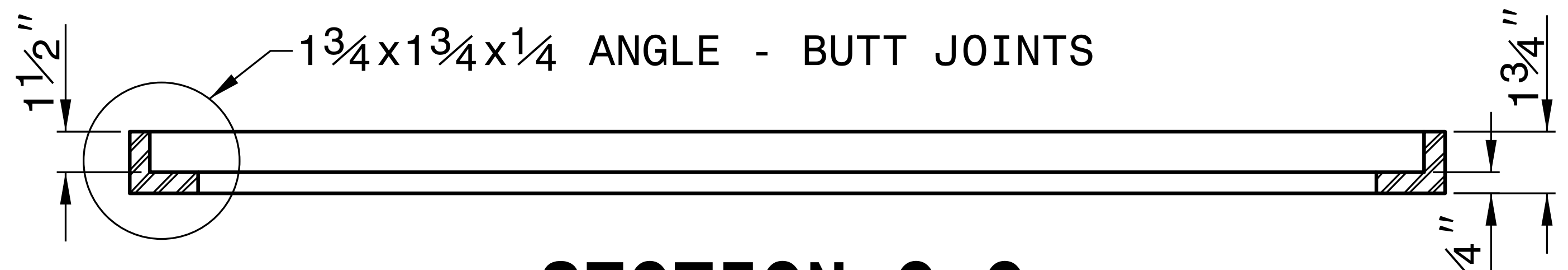
1½"
1¾x1¾x¼ ANGLE - BUTT JOINTS
1¾"
¼"

SECTION C-C
FRAME

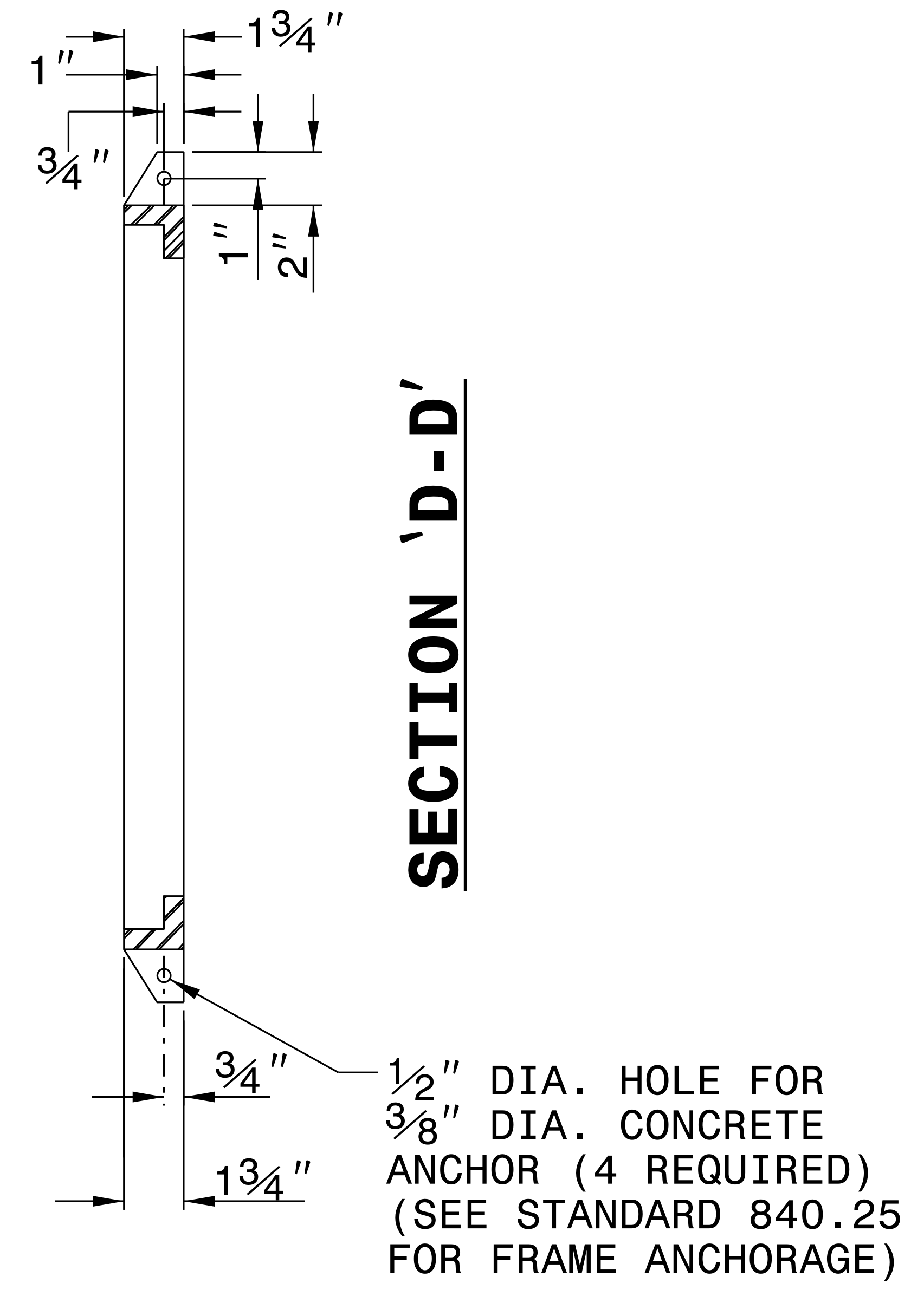
1"
1¾"
¾"
1"
2"
¾"
1¾"
½" DIA. HOLE FOR
⅜" DIA. CONCRETE
ANCHOR (4 REQUIRED)
(SEE STANDARD 840.25
FOR FRAME ANCHORAGE)

SECTION 'D-D'

NOTES:

1. HOT DIP GALVANIZE FRAME AND GRATE IN ACCORDANCE WITH ASTM DESIGNATION A-123 AND AASHTO M-111.
2. GRATE SHOULD MEET HS-20 LOADING.
3. PROVIDE STEEL CONFORMING TO THE REQUIREMENTS OF A.S.T.M. DESIGNATION A-36.
4. WELD IN ACCORDANCE WITH THE ANSI/AASHTO/AWS D1.5 WELDING CODE. SEAL WELD ALL CONNECTIONS ALONG TOP AND BOTTOM HORIZONTAL SEAMS OF CONNECTIONS IN ADDITION TO ANY REQUIRED STRUCTURAL WELDS.
5. SEE STANDARD DRAWING 840.25 FOR FRAME ANCHORAGE.

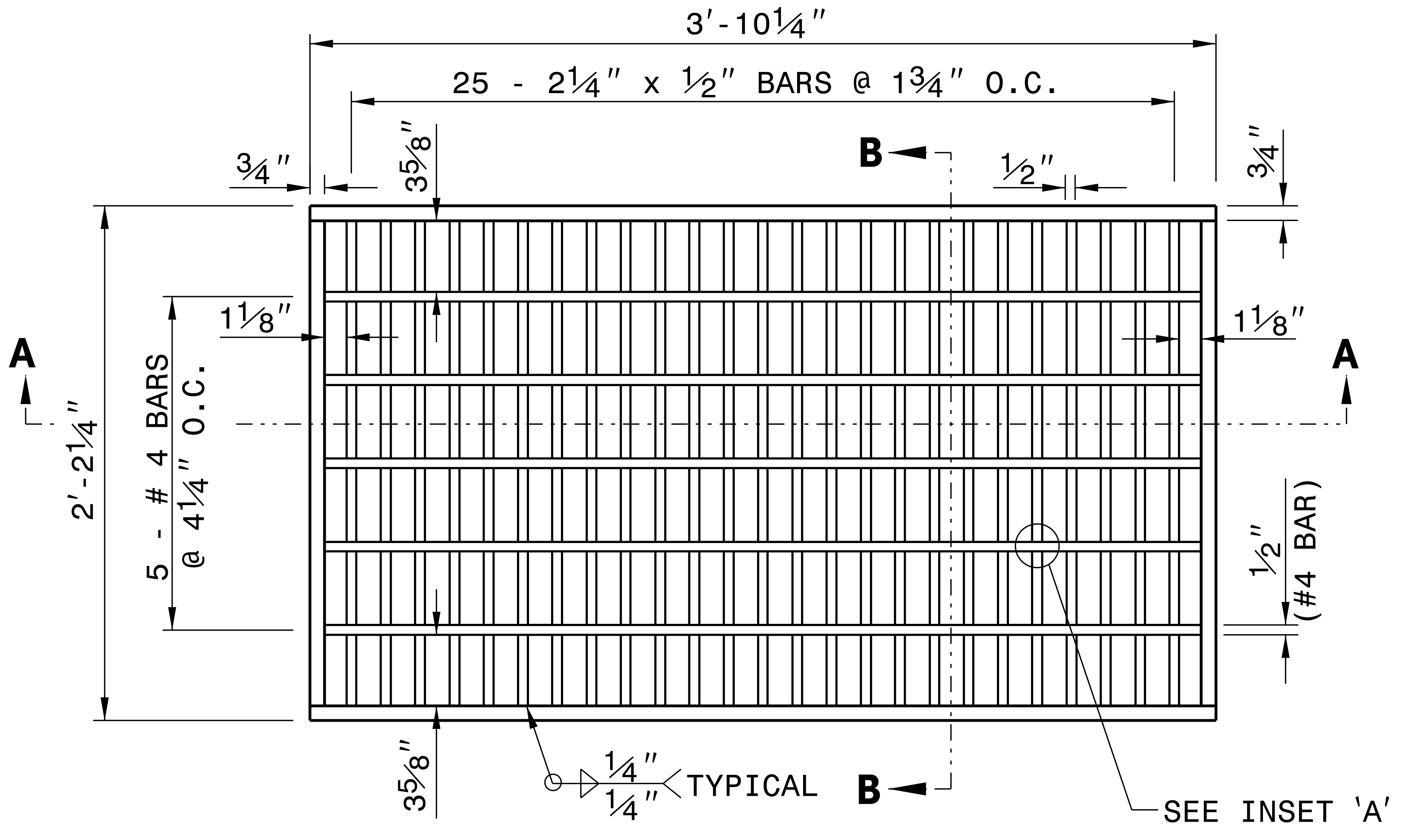
3'-10¼"
25 - 2¼" x ½" BARS @ 1¾" O.C.
¾"
3⅝"
B
½"
¾"
A
1⅛"
1⅛"
A
2'-2¼"
5 - # 4 BARS @ 4¼" O.C.
½" (#4 BAR)
3⅝"
¼"
¼"
TYPICAL
B
SEE INSET 'A'

PLAN VIEW

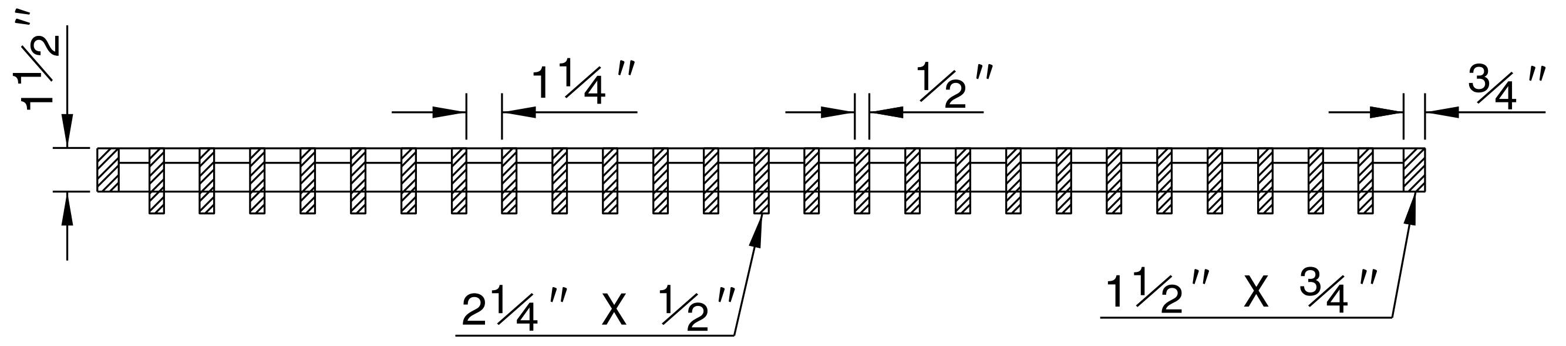
1½"
1¼"
½"
¾"
2¼" X ½"
1½" X ¾"

SECTION A-A
GRATE

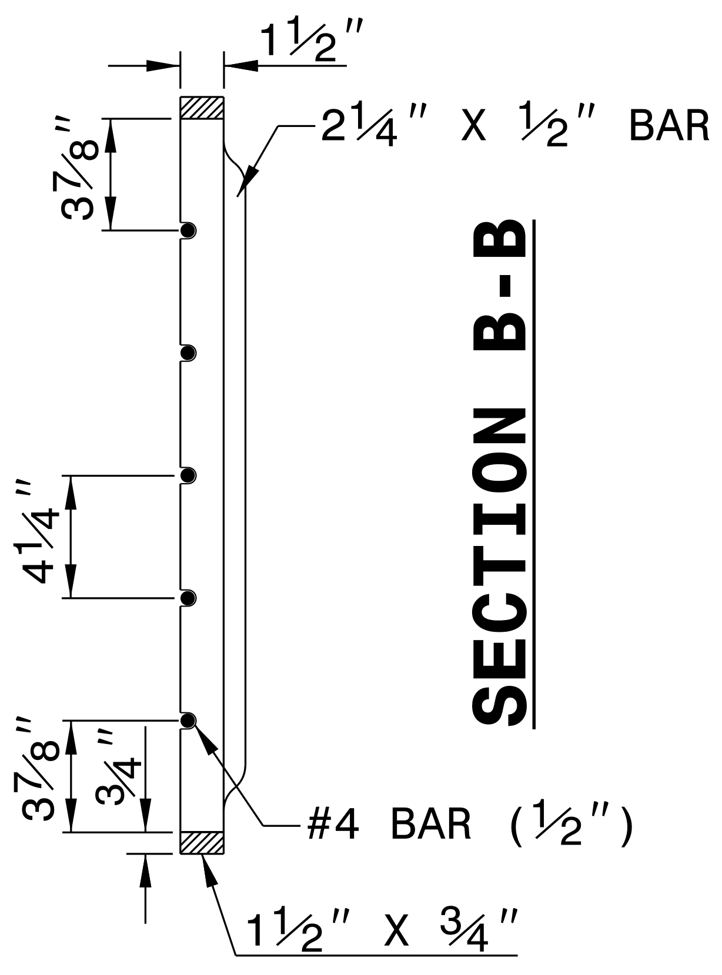
1½"
2¼" X ½" BAR
3⅞"
4¼"
3⅞"
¾"
#4 BAR (½")
1½" X ¾"

SECTION B-B

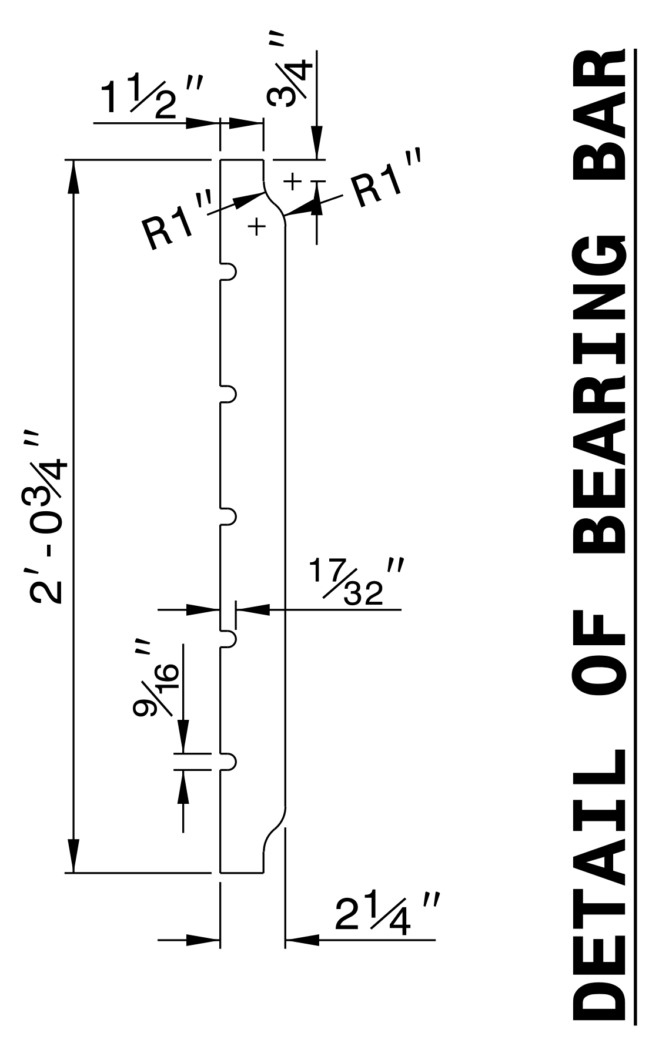
1½"
¾"
R1"
R1"
2'-0¾"
17/32"
9/16"
2¼"

DETAIL OF BEARING BAR

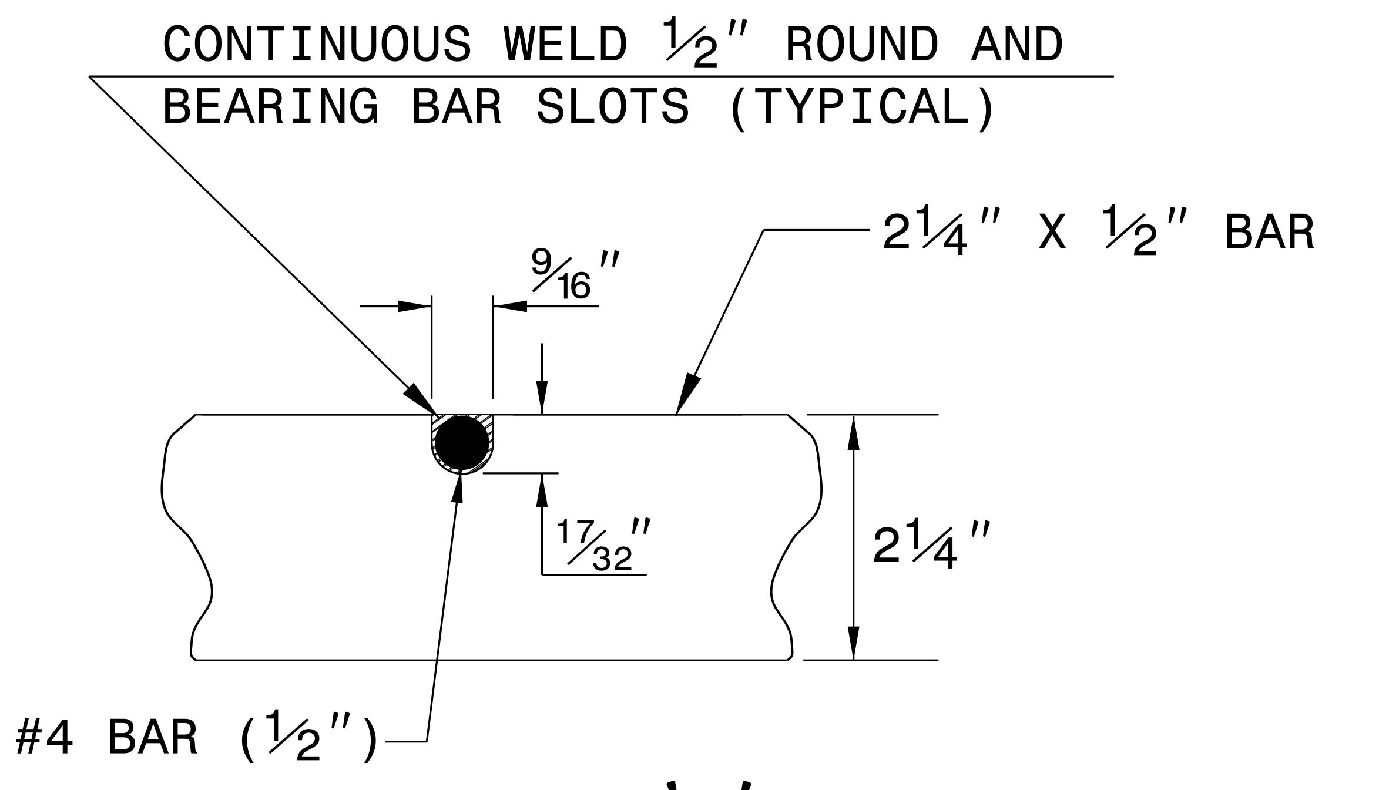
CONTINUOUS WELD ½" ROUND AND
BEARING BAR SLOTS (TYPICAL)
9/16"
2¼" X ½" BAR
17/32"
2¼"
#4 BAR (½")

INSET 'A'

(17/32" X 9/16" NOTCH IN 2¼" X ½" BAR)

REVISED 10-10-02
FOR HS-20 LOADING

SEAL
33144
NICOLE M. HACKLER

DocuSigned by:
Nicole M. Hackler
5884323D34164C5...
10/6/2023

DOCUMENT NOT CONSIDERED FINAL
UNLESS ALL SIGNATURES COMPLETED

CONTRACT STANDARDS
AND DEVELOPMENT UNIT
Office 919-707-6950 FAX 919-250-4119

BICYCLE SAFE
STEEL GRATE AND FRAME

ORIGINAL BY: E.E. WARD DATE: 11-12-98
MODIFIED BY: E.E. WARD DATE: 10-10-02
CHECKED BY: DATE:
FILE SPEC.: /usr/stand/details/bicyclesafe.dgn

11-MAY-2018 08:38
S:\Contracts\Contracts\Special Details\ericward\usr\details\stand\bicyclesafe.dgn
.jhowerton AT CSD-292595

PROJECT REFERENCE NO.	SHEET NO.
R-5861	2C-7

STATE OF
NORTH CAROLINA
DEPT. OF TRANSPORTATION
DIVISION OF HIGHWAYS
RALEIGH, N.C.

ENGLISH DETAIL DRAWING FOR
GUIDE FOR BERM DRAINAGE OUTLET
36″ PIPE

SHEET 1 OF 1
850D11

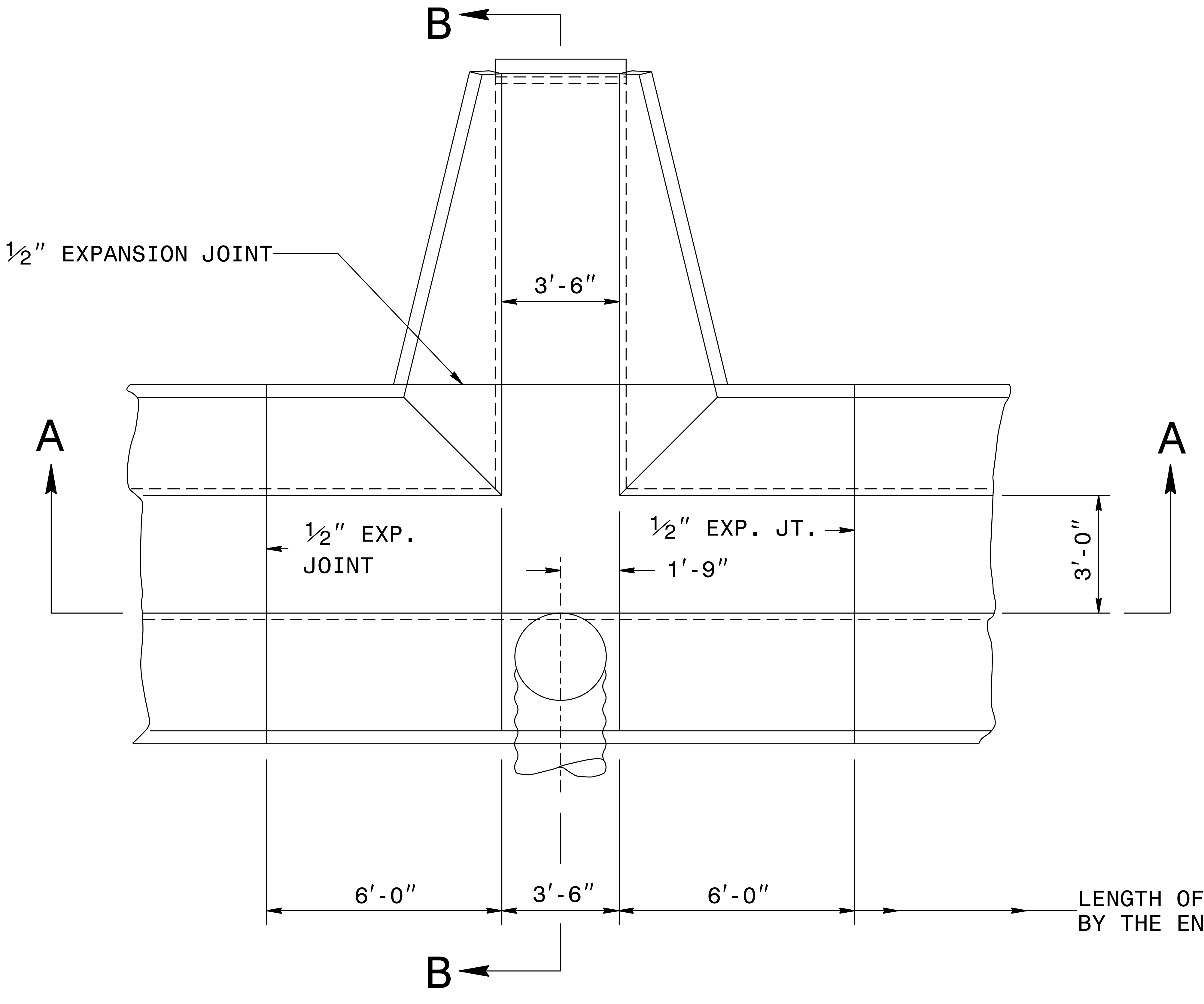
B
B
½″ EXPANSION JOINT
3′-6″
A
A
½″ EXP.
JOINT
½″ EXP. JT.
1′-9″
3′-0″
6′-0″
3′-6″
6′-0″
LENGTH OF PAVED DITCH AS DIRECTED
BY THE ENGINEER (5′ MIN.)

PLAN

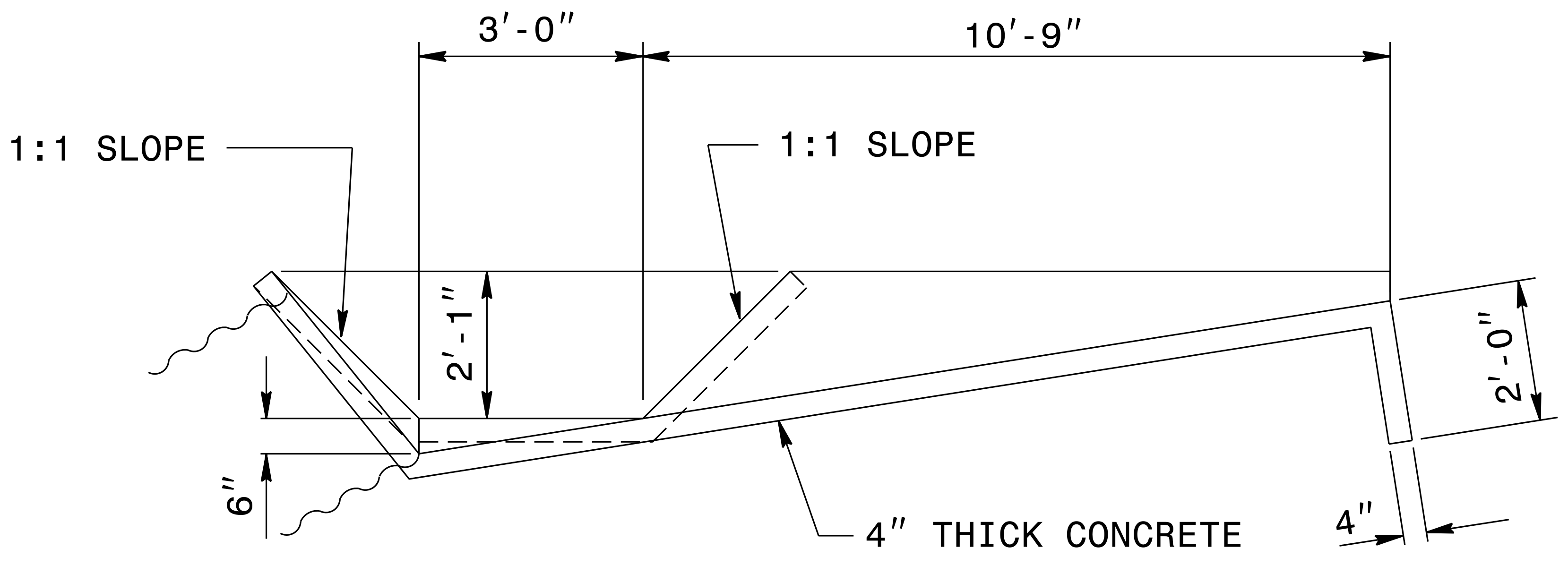
3′-0″
10′-9″
1:1 SLOPE
1:1 SLOPE
2′-1″
2′-0″
6″
4″ THICK CONCRETE
4″

SECTION BB

GENERAL NOTES:

WHERE NECESSARY, ELBOWS MAY BE USED TO SKEW PIPE TO FIT INLETS WHERE THERE IS OFFSET BETWEEN THE INLET END AT BERM AND THE D.I.

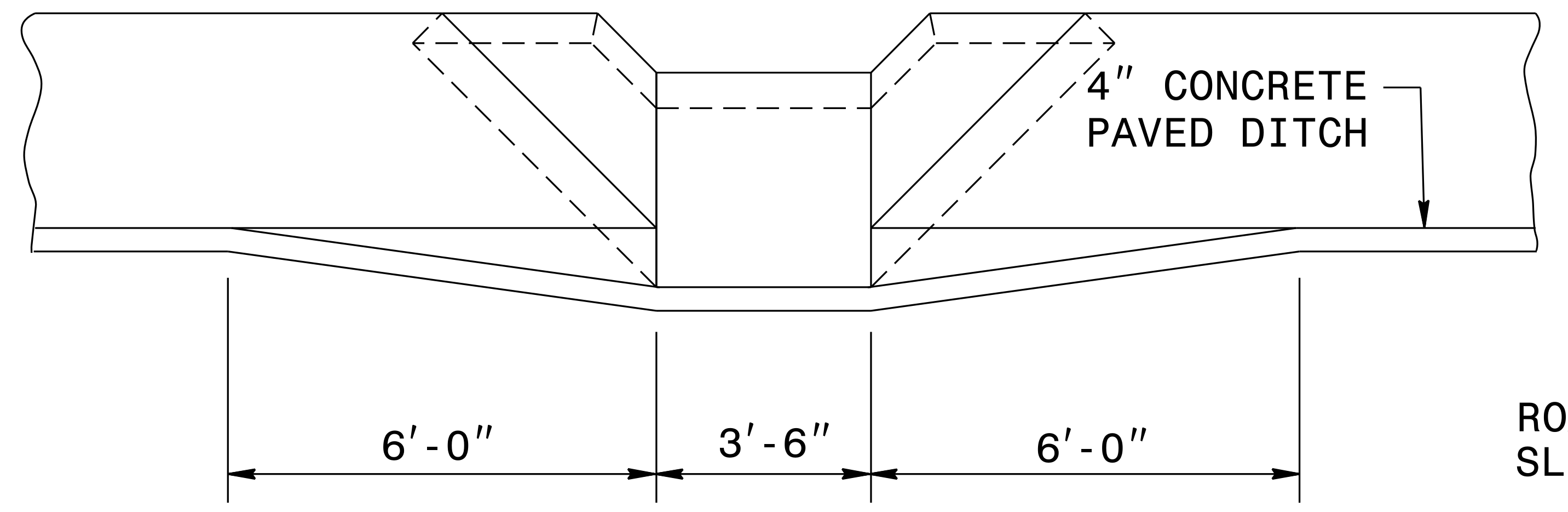
4″ CONCRETE
PAVED DITCH
6′-0″
3′-6″
6′-0″

SECTION AA

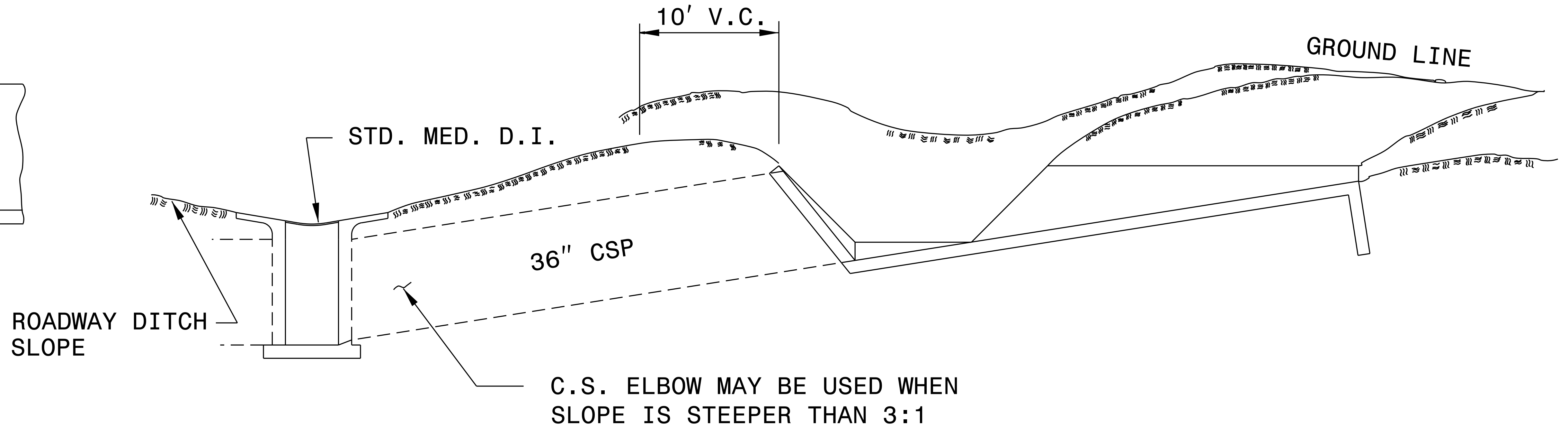
10′ V.C.
GROUND LINE
STD. MED. D.I.
36″ CSP
ROADWAY DITCH
SLOPE
C.S. ELBOW MAY BE USED WHEN
SLOPE IS STEEPER THAN 3:1

ELEVATION

STATE OF
NORTH CAROLINA
DEPT. OF TRANSPORTATION
DIVISION OF HIGHWAYS
RALEIGH, N.C.

ENGLISH DETAIL DRAWING FOR
GUIDE FOR BERM DRAINAGE OUTLET
36″ PIPE

SHEET 1 OF 1
850D11

30-APR-2019 09:40
S:\Contracts\Contracts\Special Details\ericward\usr\details\stand\850d11.dgn
jhowerton AT CSD-292595

SEAL 33144
10/6/2023

DOCUMENT NOT CONSIDERED FINAL
UNLESS ALL SIGNATURES COMPLETED

**CONTRACT STANDARDS
AND DEVELOPMENT UNIT**
Office 919-707-6950 FAX 919-250-4119

SEE PLATE FOR TITLE

ORIGINAL BY: 2002 STANDARDS DATE: 01-15-02
MODIFIED BY: E.E. WARD DATE: 10-26-04
CHECKED BY: DATE:
FILE SPEC.: usr/details/stand/850d01.dgn

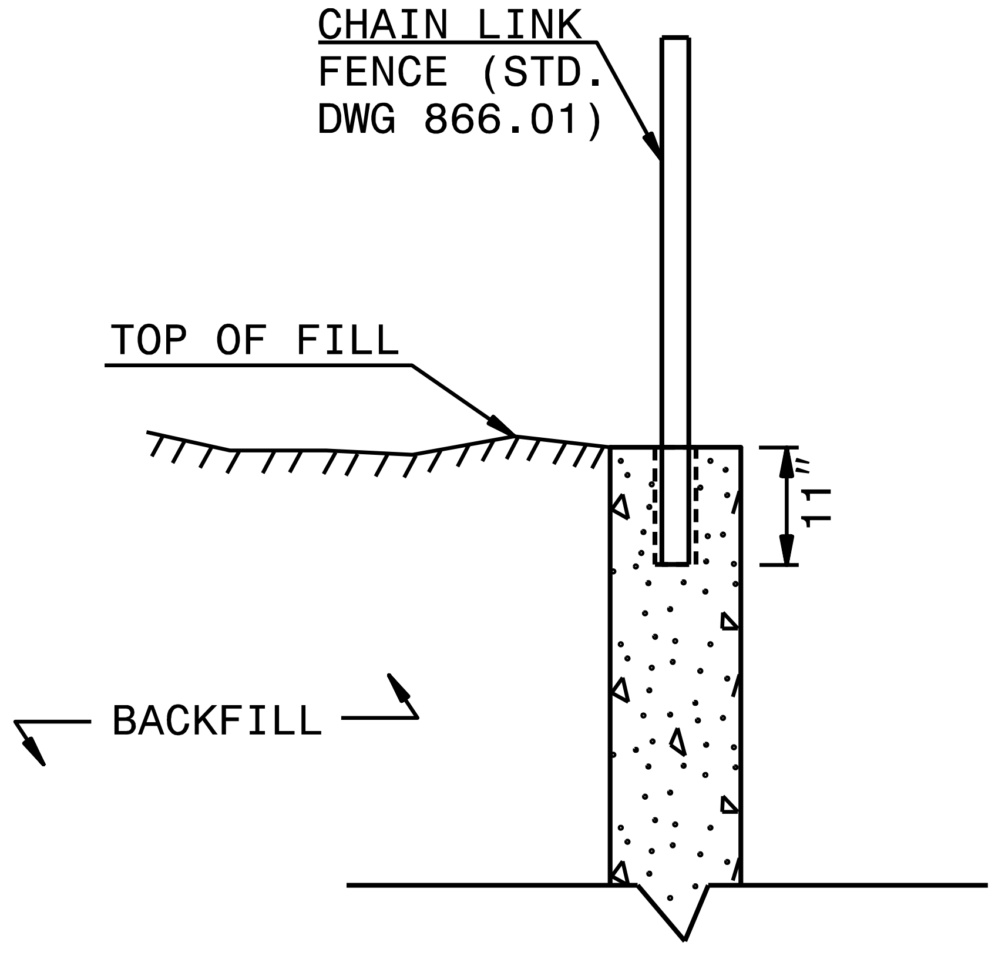

CHAIN LINK FENCE (STD. DWG 866.01)
TOP OF FILL
11″
BACKFILL

SECTION A-A
RETAINING WALL

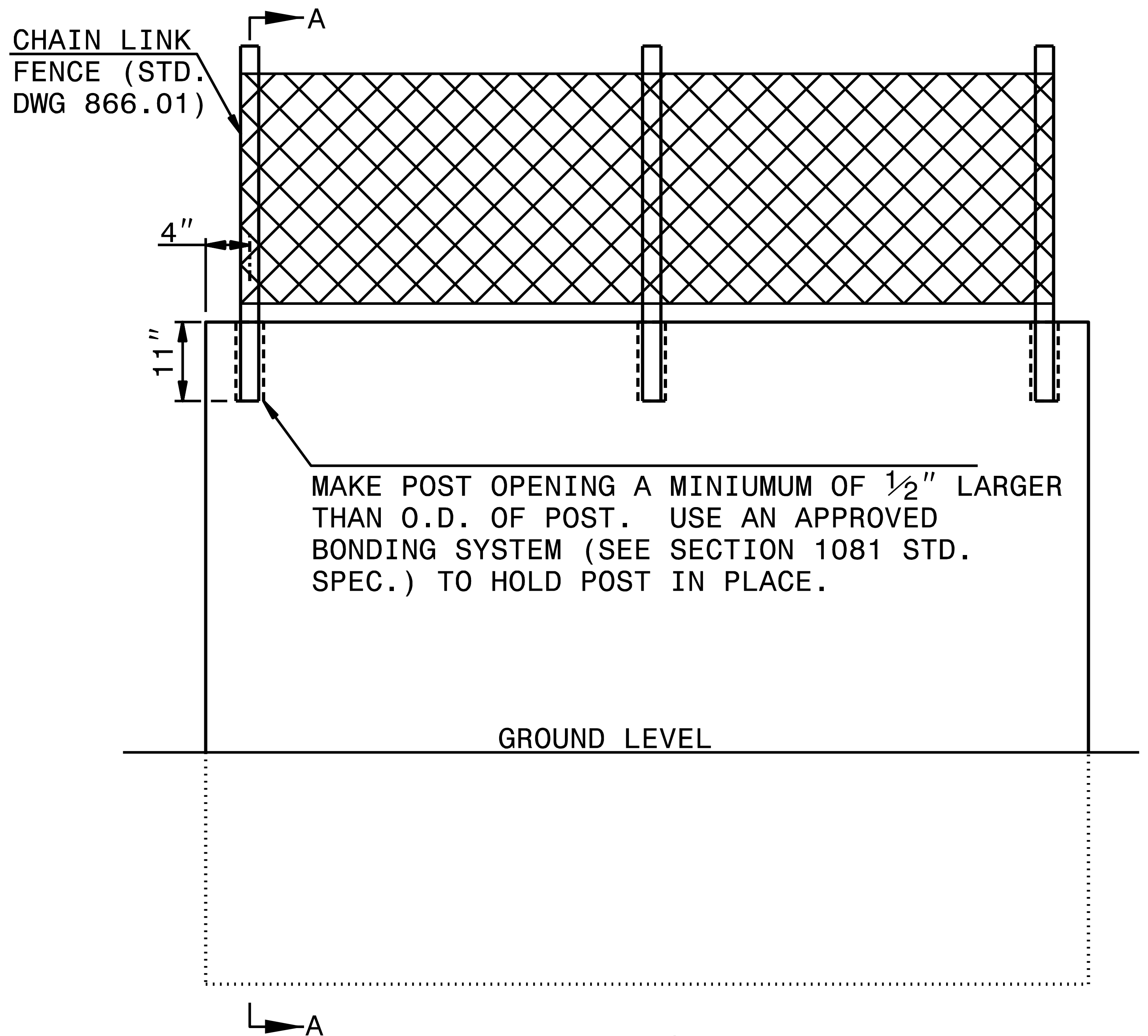

A
CHAIN LINK FENCE (STD. DWG 866.01)
4″
11″
MAKE POST OPENING A MINIUMUM OF ½″ LARGER THAN O.D. OF POST. USE AN APPROVED BONDING SYSTEM (SEE SECTION 1081 STD. SPEC.) TO HOLD POST IN PLACE.
GROUND LEVEL
A

ELEVATION VIEW
OF RETAINING WALL

EMBED CHAIN LINK FENCE 11″ INTO PROPOSED WALL IN A SLEEVE OR BLOCKOUT WITH EPOXY OR CONCRETE GROUT ANCHORING SYSTEM. PRE-MEASURE AND CENTER THE PROPOSED FENCE ON TOP OF WALL FOR POST SPACINGS. IFF DRILLING THE HOLES FOR POSTS, USE A ROTARY DRILL TO DRILL HOLES IN THE CONCRETE. NO IMPACT DRILLS WILL BE ALLOWED, TO ELIMINATE ANY POSSIBILITY OF STRUCTURAL DAMAGES TO THE PROPOSED WALL.

SEAL 33144
NICOLE M. HACKLER

DocuSigned by:
Nicole M. Hackler
5884323D34164C5...
10/6/2023

DOCUMENT NOT CONSIDERED FINAL
UNLESS ALL SIGNATURES COMPLETED

CONTRACT STANDARDS
AND DEVELOPMENT UNIT
Office 919-707-6950 FAX 919-250-4119

CHAIN LINK FENCE ON RETAINING WALL

ORIGINAL BY: DATE:
MODIFIED BY: K.A. KEMPF DATE: SEP. 2017
CHECKED BY: DATE:
FILE SPEC.: usr/detials/jhowerton/chain link on retaining wall.dgn

$$$$$$SYSTIME$$$$$
$$$$$$$$$$$$$$$$DGN$$$$$$$$$$$$$$$
$$$USERNAME$$$$

16-APR-2018 11:44
S:\Contracts\Contracts\Special Details\jhowerton\840d02 Extra Depth CB.dgn
jhowerton AT CSD-292595

5/14/99

PROJECT REFERENCE NO.	SHEET NO.
R-5861	2C-9

STATE OF
NORTH CAROLINA
DEPT. OF TRANSPORTATION
DIVISION OF HIGHWAYS
RALEIGH, N.C.

ENGLISH DETAIL DRAWING FOR
EXTRA DEPTH
CONCRETE CATCH BASIN
12″ THRU 84″ PIPE

SHEET 1 OF 2
840D02

STATE OF
NORTH CAROLINA
DEPT. OF TRANSPORTATION
DIVISION OF HIGHWAYS
RALEIGH, N.C.

ENGLISH DETAIL DRAWING FOR
EXTRA DEPTH
CONCRETE CATCH BASIN
12″ THRU 84″ PIPE

SHEET 1 OF 2
840D02

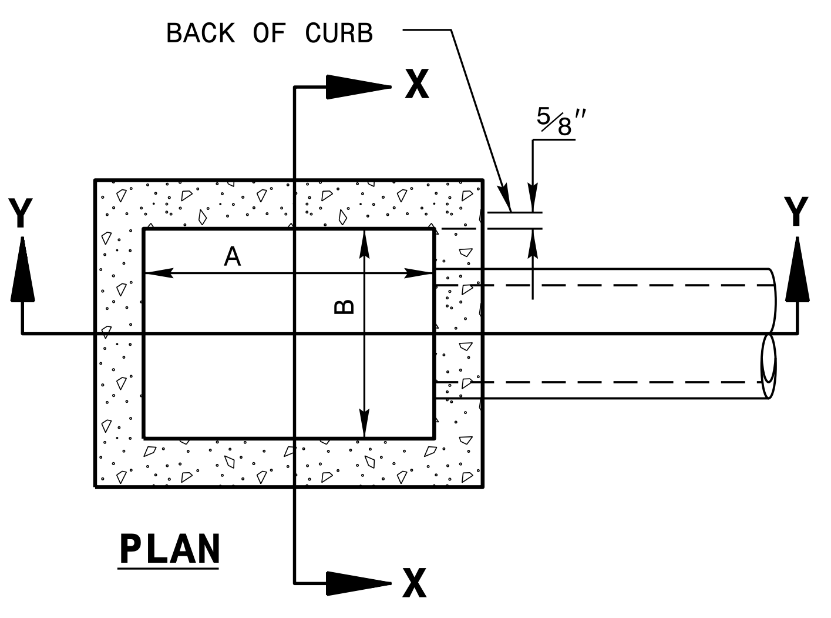
BACK OF CURB
X
X
Y
Y
A
B
5⁄8″

PLAN

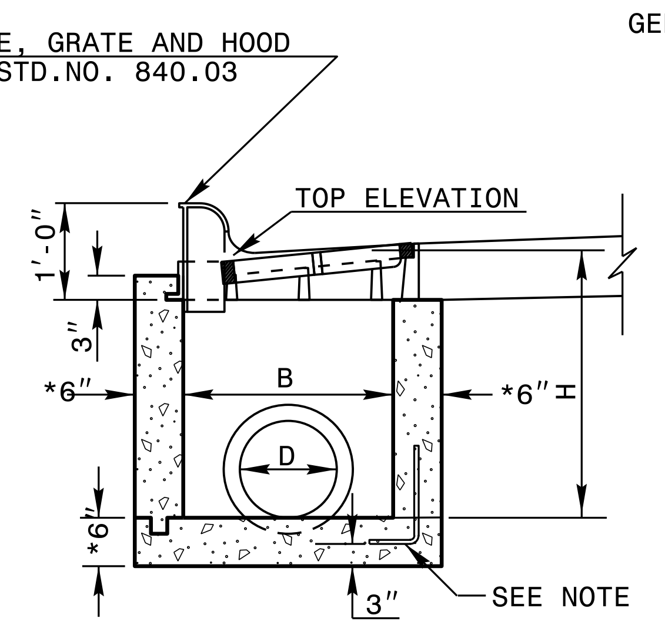
FRAME, GRATE AND HOOD SEE STD.NO. 840.03
TOP ELEVATION
1′-0″
3″
*6″
B
*6″ H
D
*6″
3″
SEE NOTE

SECTION X-X

GENERAL NOTES:

USE CLASS "B" CONCRETE THROUGHOUT.

PROVIDE ALL CATCH BASINS OVER 3′-6″ IN DEPTH WITH STEPS 12″ ON CENTER. USE STEPS WHICH COMPLY WITH STD. DRAWING 840.66.

OPTIONAL CONSTRUCTION - MONOLITHIC POUR, 2″ KEYWAY, OR #4 BAR DOWELS AT 12″ CENTERS AS DIRECTED BY THE ENGINEER.

USE FORMS FOR THE CONSTRUCTION OF THE BOTTOM SLAB.

IF REINFORCED CONCRETE PIPE IS SET IN BOTTOM SLAB OF BOX, ADD TO SLAB AS SHOWN ON STD. NO. 840.00.

USE TYPE "E", "F" AND "G" GRATES UNLESS OTHERWISE INDICATED.

* USE 6″ WALLS FOR BOXES UP TO 8′ IN HEIGHT. USE 8″ WALLS, 8″ BOTTOM SLAB AND 8″ TOP SLAB FOR BOXES GREATER THAN 8′ IN HEIGHT AND UP TO 20′ IN HEIGHT.

CONSTRUCT WITH PIPE CROWNS MATCHING.

CHAMFER ALL EXPOSED CORNERS 1″.

** FOR STRUCTURES WITH PIPE LARGER THAN 54″, MAKE THE TOP SLAB 8″ THICK.

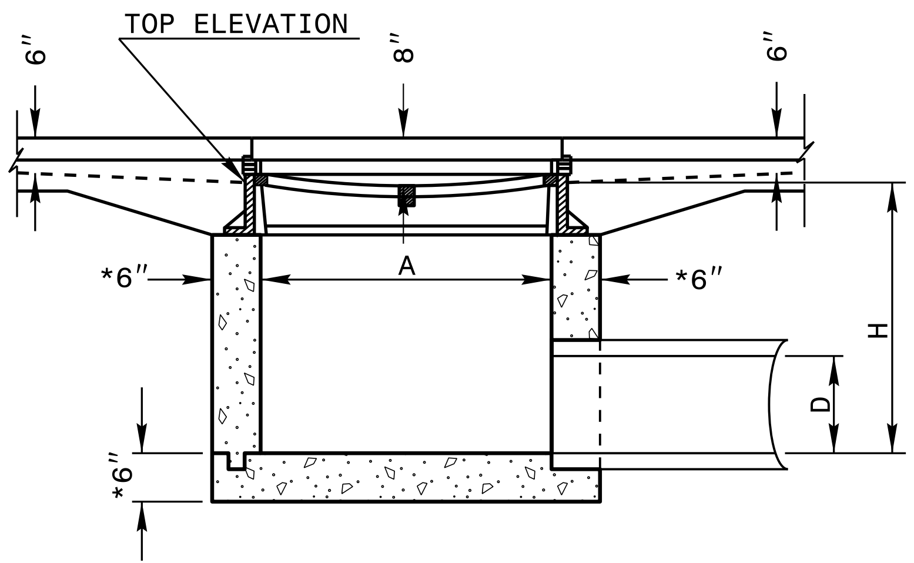
TOP ELEVATION
6″
8″
6″
*6″
A
*6″
H
D
*6″

SECTION Y-Y

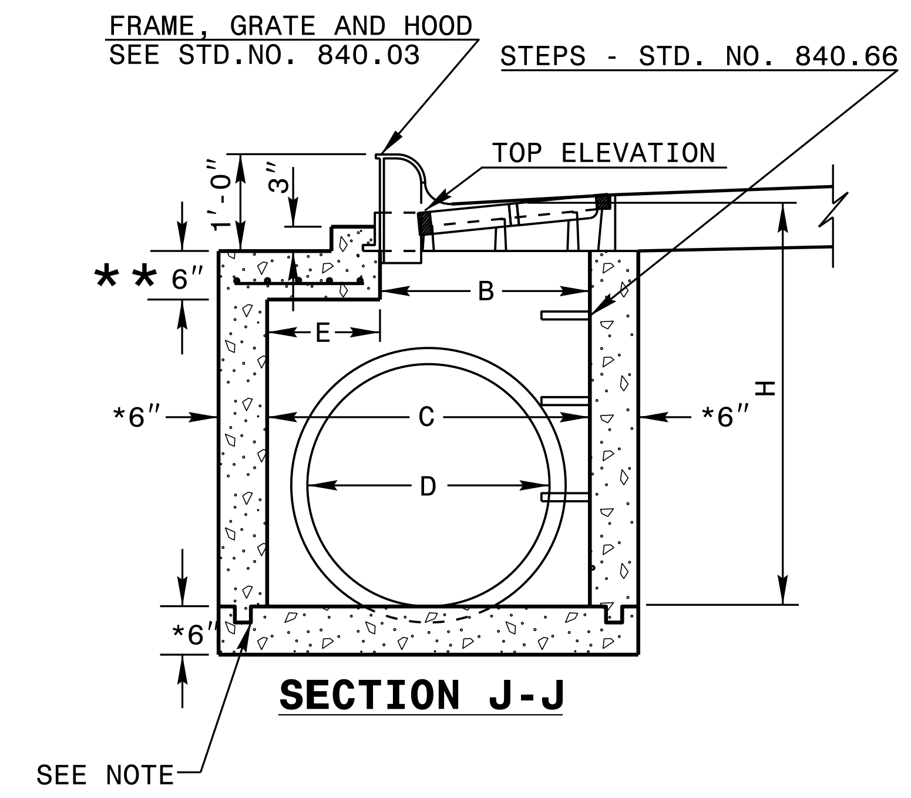
FRAME, GRATE AND HOOD SEE STD.NO. 840.03
STEPS - STD. NO. 840.66
TOP ELEVATION
1′-0″
3″
** 6″
B
E
*6″
C
D
*6″
H
*6″
SEE NOTE

SECTION J-J

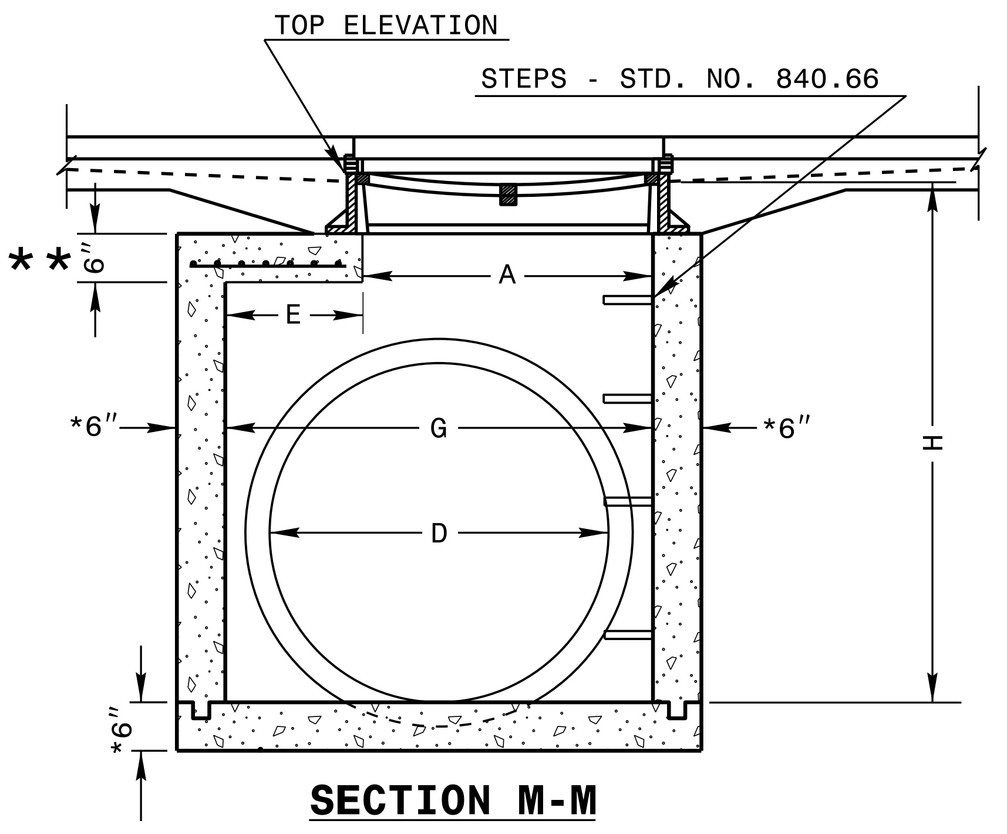
TOP ELEVATION
STEPS - STD. NO. 840.66
** 6″
E
A
*6″
G
*6″
D
H
*6″

SECTION M-M

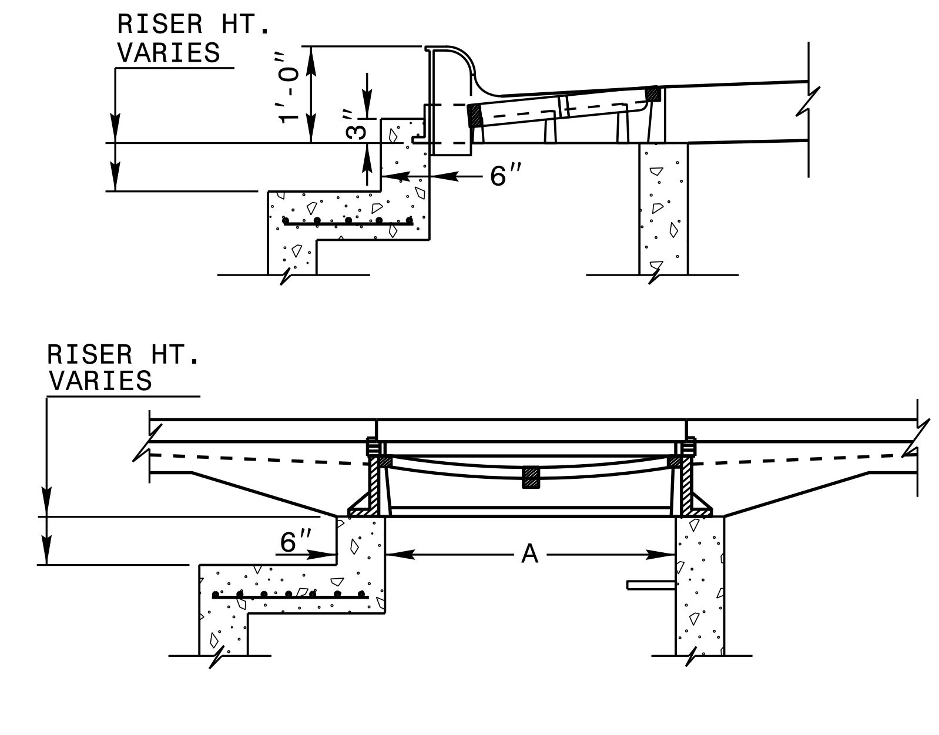
RISER HT. VARIES
1′-0″
3″
6″
RISER HT. VARIES
6″
A

DETAIL SHOWING METHOD OF RISER CONSTRUCTION

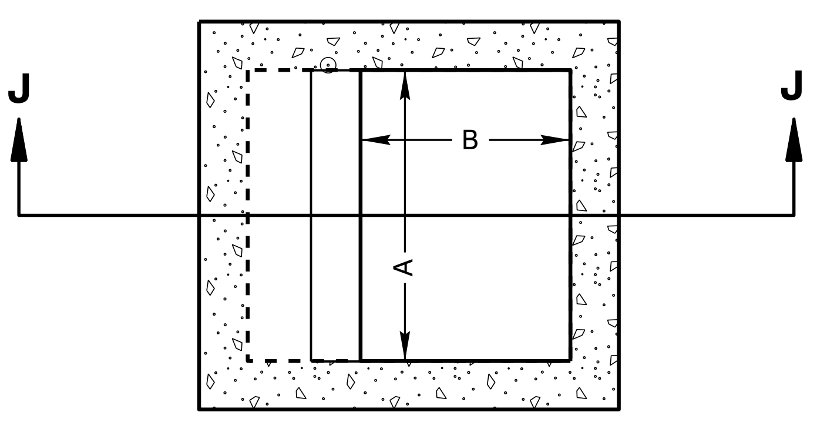

PLAN

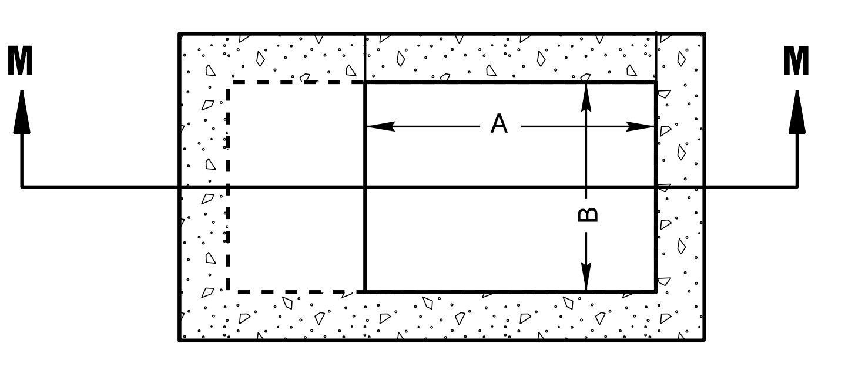

PLAN

STATE OF
NORTH CAROLINA
DEPT. OF TRANSPORTATION
DIVISION OF HIGHWAYS
RALEIGH, N.C.

ENGLISH DETAIL DRAWING FOR
EXTRA DEPTH
CONCRETE CATCH BASIN
12″ THRU 84″ PIPE

SHEET 2 OF 2
840D02

STATE OF
NORTH CAROLINA
DEPT. OF TRANSPORTATION
DIVISION OF HIGHWAYS
RALEIGH, N.C.

ENGLISH DETAIL DRAWING FOR
EXTRA DEPTH
CONCRETE CATCH BASIN
12″ THRU 84″ PIPE

SHEET 2 OF 2
840D02

** FOR STRUCTURES WITH PIPE LARGER THAN 54″, MAKE THE TOP SLAB 8″ THICK.

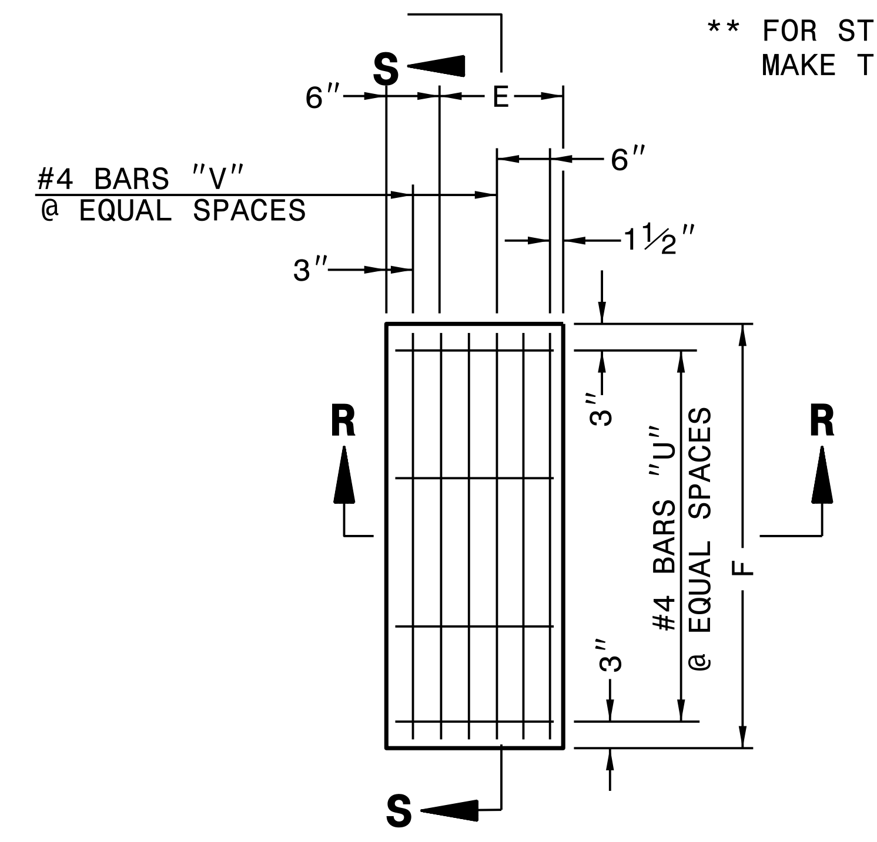
S
E
6″
6″
#4 BARS "V" @ EQUAL SPACES
1½″
3″
R
R
3″
#4 BARS "U" @ EQUAL SPACES
F
3″
S

PLAN OF TOP SLAB

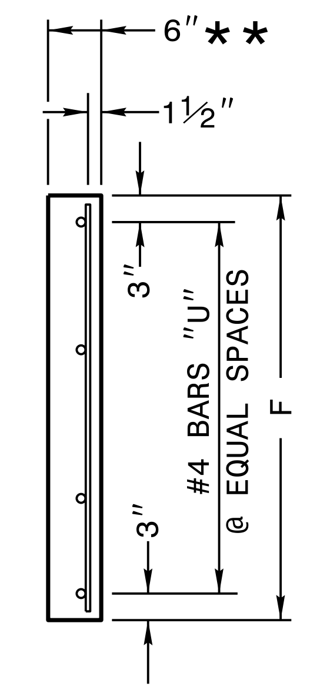
6″**
1½″
3″
#4 BARS "U" @ EQUAL SPACES
F
3″

SECTION S-S

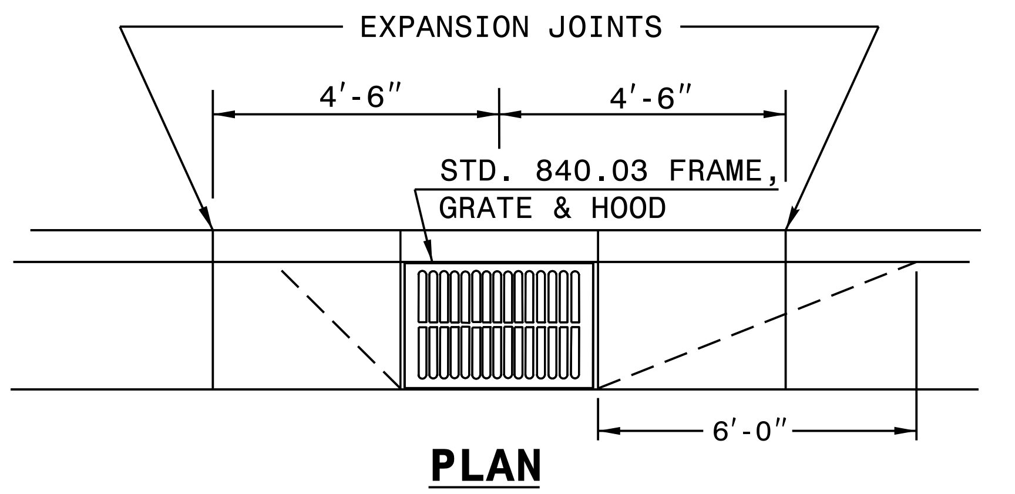
EXPANSION JOINTS
4′-6″
4′-6″
STD. 840.03 FRAME, GRATE & HOOD
6′-0″

PLAN

CURB AND GUTTER WITH CATCH BASIN ON STEEP GRADES

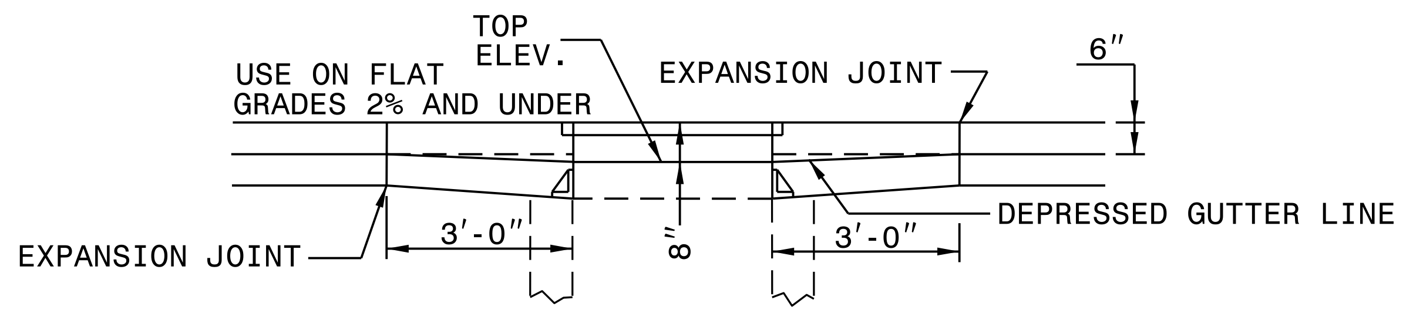
TOP ELEV.
USE ON FLAT GRADES 2% AND UNDER
EXPANSION JOINT
6″
3′-0″
8″
3′-0″
DEPRESSED GUTTER LINE
EXPANSION JOINT

ELEVATION

NORMAL CURB AND GUTTER ON LIGHT GRADES

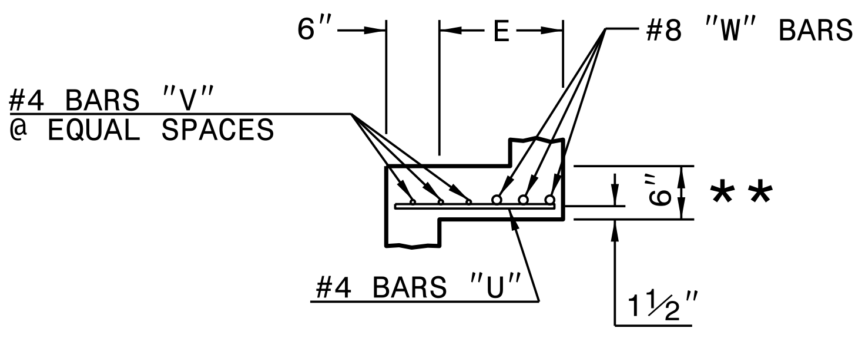
6″
E
#8 "W" BARS
#4 BARS "V" @ EQUAL SPACES
6″ **
#4 BARS "U"
1½″

SECTION R-R

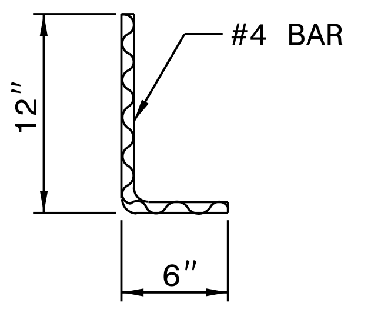

DOWEL

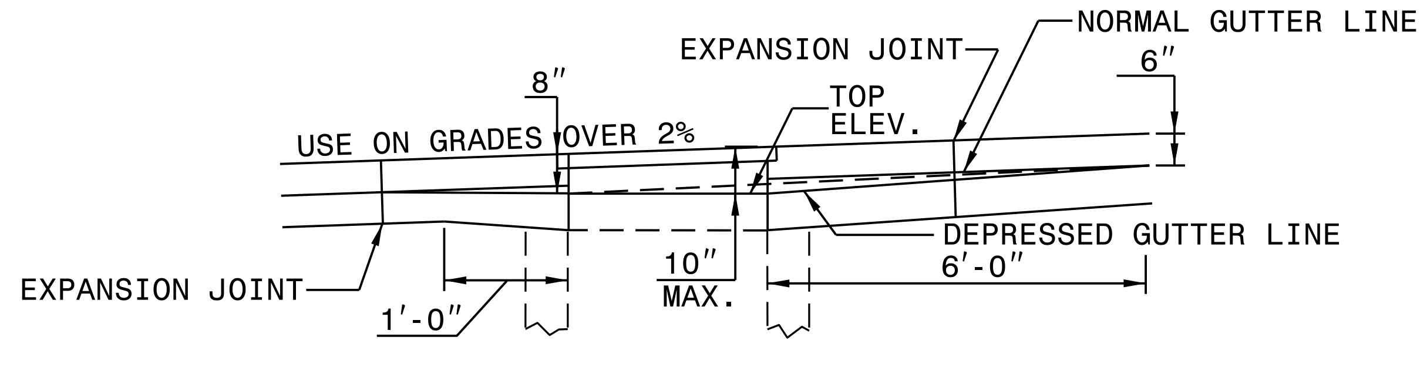
EXPANSION JOINT
NORMAL GUTTER LINE
6″
8″
TOP ELEV.
USE ON GRADES OVER 2%
DEPRESSED GUTTER LINE
6′-0″
EXPANSION JOINT
1′-0″
10″ MAX.

ELEVATION

NORMAL CURB AND GUTTER ON STEEP GRADES

* RISER HAS .228 CUBIC YARDS OF CONCRETE PER FOOT HEIGHT

MINIMUM DIMENSIONS AND QUANTITIES FOR CONCRETE CATCH BASIN(BASED ON MIN. HEIGHT, H, WITH NO RISER) *

DIMENSIONS OF BOX AND PIPE						COVER DIMENSION									CU.YDS. CONC. IN BOX			DEDUCTIONS ONE PIPE	
PIPE	SPAN	WIDTH	WIDTH	SPAN	MIN. HEIGHT			BARS-U		BARS-V		BARS-W		TOTAL LBS.	TOP SLAB	BOTTOM SLAB	TOT. CONC. FOR MINIMUM HEIGHT, H		
D	A	B	C	G	H	E	F	NO.	LENGTH	NO.	LENGTH	NO.	LENGTH					C.M.	R.C.
12″	3′-0″	2′-2″	--	--	2′-0″	--	--	--	--	--	--	--	--	--	--	0.235	0.772	0.015	0.026
15″	3′-0″	2′-2″			2′-3″											0.235	0.829	0.023	0.036
18″	3′-0″	2′-2″			2′-6″											0.235	0.887	0.033	0.049
24″	3′-0″	2′-2″			3′-1″											0.235	1.001	0.059	0.085
30″	3′-0″	2′-2″	3′-4″	3′-4″	3′-10″	1′-2″	4′-4″	4	1′-5″	2	4′-1″	3	4′-1″	39	0.123	0.347	1.433	0.092	0.127
36″	3′-0″	2′-2″	3′-10″	3′-10″	4′-6″	1′-8″	4′-10″	4	1′-11″	3	4′-7″	3	4′-7″	43	0.161	0.432	1.714	0.132	0.178
42″	3′-0″	2′-2″	4′-5″	4′-5″	4′-11″	2′-2″	5′-5″	5	2′-5″	4	5′-2″	3	5′-2″	47	0.200	0.543	1.738	0.180	0.243
48″	3′-0″	2′-2″	5′-0″	5′-0″	5′-6″	2′-10″	6′-0″	5	3′-1″	4	5′-9″	3	5′-9″	51	0.235	0.667	2.052	0.235	0.317
54″	3′-0″	2′-2″	5′-7″	5′-7″	6′-0″	3′-5″	6′-7″	6	3′-8″	5	6′-4″	3	6′-4″	56	0.289	0.802	2.387	0.297	0.401
60″	3′-0″	2′-2″	6′-3″	6′-3″	6′-6″	4′-1″	7′-3″	6	4′-4″	5	7′-0″	3	7′-0″	61	0.340	0.973	2.722	0.363	0.546
66″	3′-0″	2′-2″	6′-11″	6′-11″	7′-0″	4′-9″	7′-11″	7	5′-0″	6	7′-8″	3	7′-8″	66	0.391	1.160	3.057	0.440	0.655
72″	3′-0″	2′-2″	7′-6″	7′-6″	7′-6″	5′-3″	8′-6″	7	5′-6″	6	8′-3″	3	8′-3″	72	0.442	1.340	3.392	0.524	0.774
78″	3′-0″	2′-2″	8′-1″	8′-1″	8′-0″	5′-11″	9′-1″	8	6′-2″	7	8′-10″	3	8′-10″	78	0.493	1.530	3.727	0.615	0.893
84″	3′-0″	2′-2″	8′-9″	8′-9″	8′-6″	6′-7″	9′-9″	8	6′-10″	7	9′-6″	3	9′-6″	84	0.544	1.760	4.062	0.713	1.010

DocuSigned by:
Nicole M. Hackler
5884323D34164C5...
SEAL 33144
10/6/2023

DOCUMENT NOT CONSIDERED FINAL UNLESS ALL SIGNATURES COMPLETED

CONTRACT STANDARDS
AND DEVELOPMENT UNIT
Office 919-707-6950 FAX 919-250-4119

SEE PLATE FOR TITLE

ORIGINAL BY: 2002 Std.840.01 DATE:
MODIFIED BY: E.E. WARD DATE: 3-1-02
CHECKED BY: DATE:
FILE SPEC.: jhowerton/840d02 Extra Depth CB.dgn

24-APR-2019 07:24
S:\Contracts\Contracts\Special Details\jhowerton\840d04 3 or 4 side OTCB.dgn
jhowerton AT CSD-292595

5/14/99

PROJECT REFERENCE NO.	SHEET NO.
R-5861	2C-10

STATE OF
NORTH CAROLINA
DEPT. OF TRANSPORTATION
DIVISION OF HIGHWAYS
RALEIGH, N.C.

ENGLISH DETAIL DRAWING FOR
CONCRETE CATCH BASIN
(3 OR 4 SIDE OPEN THROAT)
(MANHOLE OPTIONAL)

SHEET 1 OF 2
840D04

STATE OF
NORTH CAROLINA
DEPT. OF TRANSPORTATION
DIVISION OF HIGHWAYS
RALEIGH, N.C.

ENGLISH DETAIL DRAWING FOR
CONCRETE CATCH BASIN
(3 OR 4 SIDE OPEN THROAT)
(MANHOLE OPTIONAL)

SHEET 1 OF 2
840D04

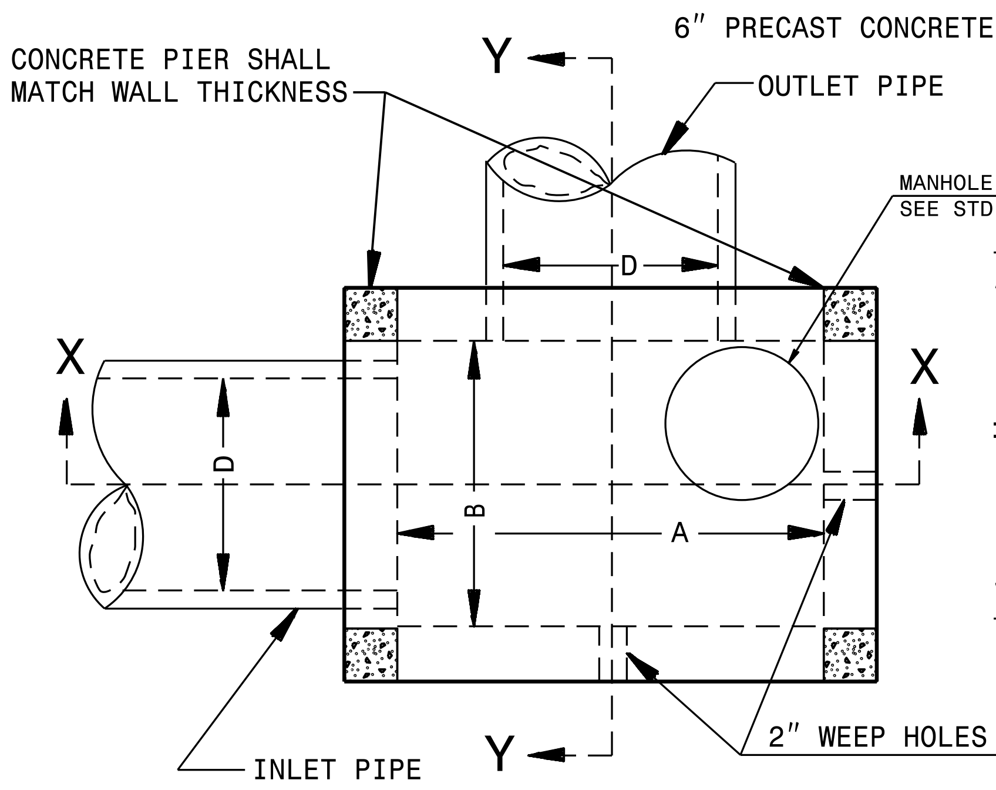
6" PRECAST CONCRETE COVER
CONCRETE PIER SHALL MATCH WALL THICKNESS
OUTLET PIPE
MANHOLE COVER & FRAME SEE STD. NO. 840.54
INLET PIPE
2" WEEP HOLES
X
Y
D
A
B

PLAN

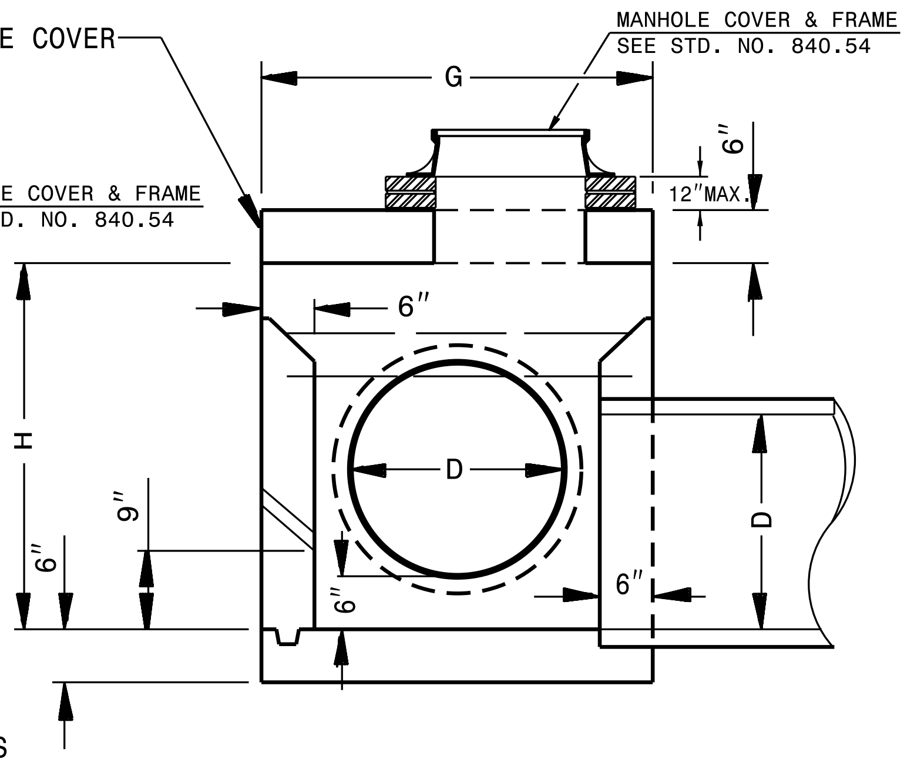
MANHOLE COVER & FRAME SEE STD. NO. 840.54
G
6"
12" MAX.
H
D
9"
6"

SECTION Y-Y

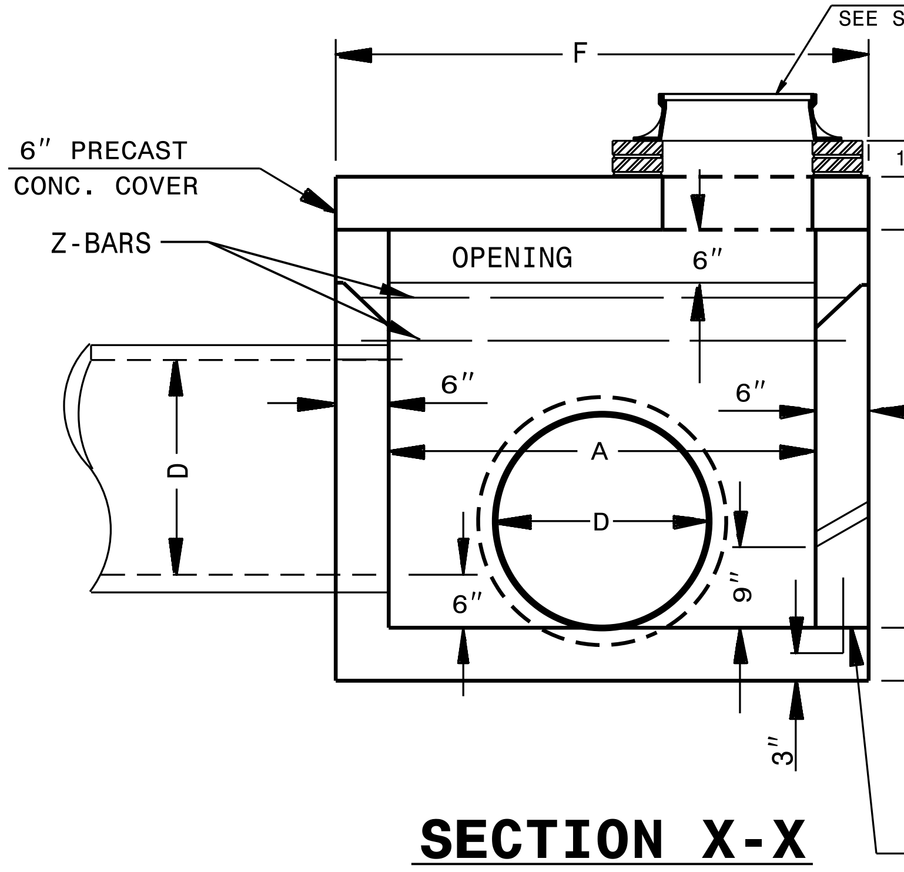
MANHOLE COVER & FRAME SEE STD. NO. 840.54
F
6" PRECAST CONC. COVER
Z-BARS
OPENING
12" MAX.
6"
A
D
H
9"
3"
SEE NOTE

SECTION X-X

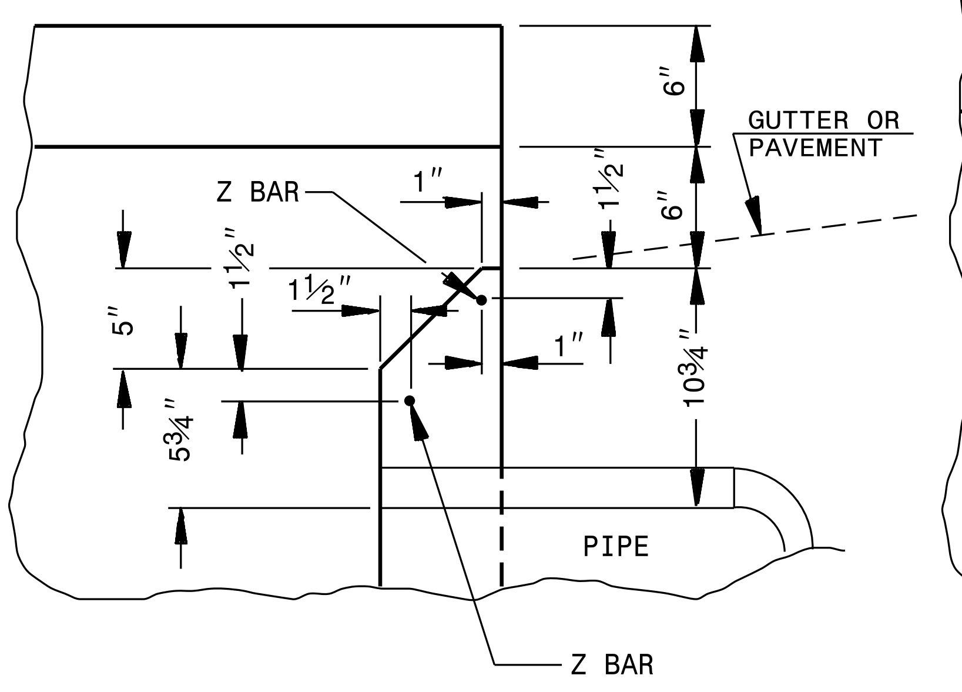
Z BAR
1"
1½"
6"
5"
5¾"
10¾"
GUTTER OR PAVEMENT
PIPE

PART SECTION Y-Y

SHOWING METHOD OF
CONSTRUCTION FOR 6" OPENING

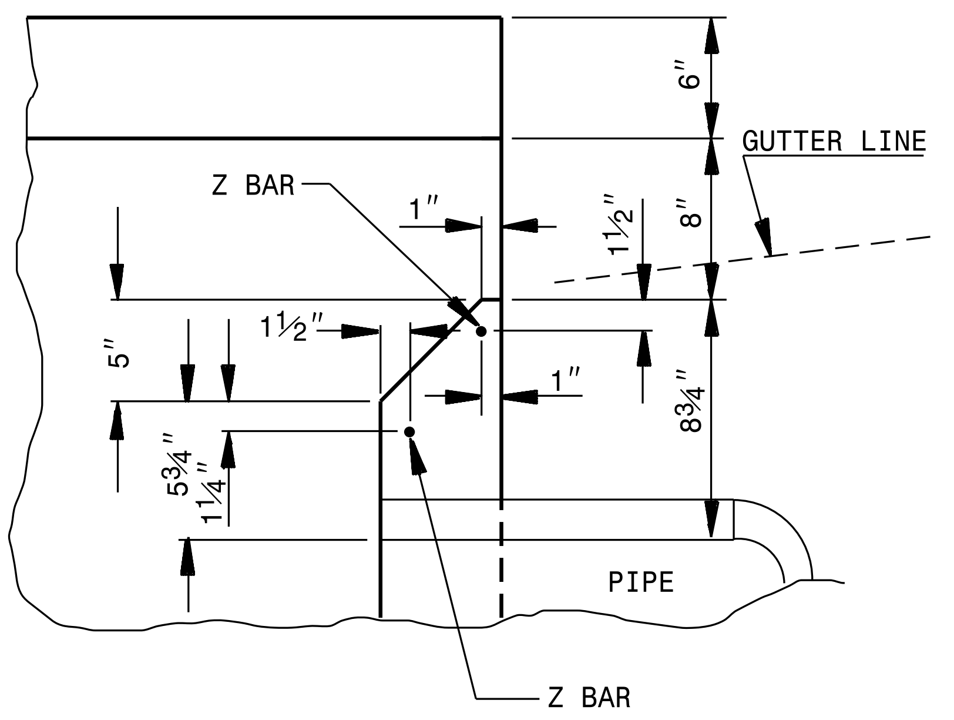
Z BAR
1"
1½"
6"
8"
5"
5¾"
1¼"
8¾"
GUTTER LINE
PIPE

PART SECTION Y-Y

SHOWING METHOD OF CONSTRUCTION
IF INCREASED OPENING IS USED

GENERAL NOTES:

ALL CATCH BASINS OVER 3'-6" IN DEPTH TO BE PROVIDED WITH STEPS 12" ON CENTERS. STEPS SHALL BE IN ACCORDANCE WITH STD. 840.66.

ALL EXPOSED CORNERS TO BE CHAMFERED 1".

CLASS "B" CONCRETE TO BE USED THROUGHOUT.

2" PIPE WEEPHOLES TO BE PLACED AS DIRECTED BY ENGINEER.

THE 6" OPENING SHOWN MAY BE INCREASED TO 8" MAXIMUM IF DEEMED TO BE NECESSARY BY THE ENGINEER.

OPTIONAL CONSTRUCTION - MONOLITHIC POUR, 2" KEYWAY, OR #5 BAR DOWELS AT 12" CENTERS AS DIRECTED BY THE ENGINEER.

FORMS ARE TO BE USED FOR THE CONSTRUCTION OF THE BOTTOM SLAB.

IF REINFORCED CONCRETE PIPE IS SET IN BASE SLAB OF BOX, ADD TO BASE AS SHOWN ON STD. DWG. 840.00.

A STONE DRAIN CONSISTING OF 1 CUBIC FOOT OF NO. 78M STONE CONTAINED IN A BAG OF POROUS FABRIC SHALL BE PLACED AT EACH WEEP HOLE.

FOR 8' IN HEIGHT OR LESS USE 6" WALLS AND BOTTOM SLAB.
OVER 8' IN HEIGHT USE 8" WALLS AND BOTTOM SLAB. QUANTITIES TO BE ADJUSTED ACCORDINGLY.

DIMENSIONS MAY BE ADJUSTED AS DIRECTED BY THE ENGINEER.

MIN. DIMENSIONS AND QUANTITIES FOR CONCRETE CATCH BASIN (BASED ON MIN. HEIGHT, H)

DIM'S OF BOX & PIPE				*REINFORCING*						*TOP & BOT. SLAB DIMENSIONS*		*CU. YDS. CONC. IN BOX*			*TOTAL QUANTITIES BOX & SLABS*		*DEDUCTION ONE PIPE*		*DED. ONE 6" THROAT OPENING*
PIPE	*SPAN*	*WIDTH*	*HEIGHT*	*BARS - X*		*BARS - Y*		*BARS - Z*											
D	A	B	H	NO.	LENGTH	NO.	LENGTH	NO.	LENGTH	F	G	TOP SLAB	BOT. SLAB	WALL/FT. HT.	LBS. REINF.	YD³ (MIN H)	C.S.	R.C.	YD³
12"	3'-6"	2'-3"	1'-10"	4	3'-0"	6	4'-3"	2	4'-3"	4'-6"	3'-3"	0.181	0.271	0.250	27	1.046	0.015	0.032	0.046
15"	3'-6"	2'-3"	2'-1"	4	3'-0"	6	4'-3"	2	4'-3"	4'-6"	3'-3"	0.181	0.271	0.250	27	1.108	0.023	0.036	0.046
18"	4'-0"	2'-8"	2'-4"	5	3'-5"	7	4'-9"	2	4'-9"	5'-0"	3'-8"	0.226	0.340	0.284	35	1.379	0.033	0.049	0.053
24"	4'-0"	2'-8"	2'-10"	5	3'-5"	7	4'-9"	2	4'-9"	5'-0"	3'-8"	0.226	0.340	0.284	35	1.521	0.059	0.085	0.053
30"	4'-0"	3'-6"	3'-4"	5	4'-3"	9	4'-9"	2	4'-9"	5'-0"	4'-6"	0.278	0.417	0.315	43	1.916	0.092	0.127	0.053
36"	4'-6"	4'-0"	3'-10"	5	4'-9"	10	5'-3"	2	5'-3"	5'-6"	5'-0"	0.340	0.510	0.352	51	2.390	0.132	0.178	0.059
42"	5'-0"	4'-6"	4'-4"	5	5'-3"	12	5'-9"	2	5'-9"	6'-0"	5'-6"	0.407	0.611	0.389	64	2.914	0.180	0.243	0.066
48"	5'-0"	5'-0"	4'-10"	5	5'-9"	13	5'-9"	2	5'-9"	6'-0"	6'-0"	0.444	0.666	0.407	68	3.298	0.235	0.317	0.066

STATE OF
NORTH CAROLINA
DEPT. OF TRANSPORTATION
DIVISION OF HIGHWAYS
RALEIGH, N.C.

ENGLISH DETAIL DRAWING FOR
CONCRETE CATCH BASIN
(3 OR 4 SIDE OPEN THROAT)
(MANHOLE OPTIONAL)

SHEET 2 OF 2
840D04

STATE OF
NORTH CAROLINA
DEPT. OF TRANSPORTATION
DIVISION OF HIGHWAYS
RALEIGH, N.C.

ENGLISH DETAIL DRAWING FOR
CONCRETE CATCH BASIN
(3 OR 4 SIDE OPEN THROAT)
(MANHOLE OPTIONAL)

SHEET 2 OF 2
840D04

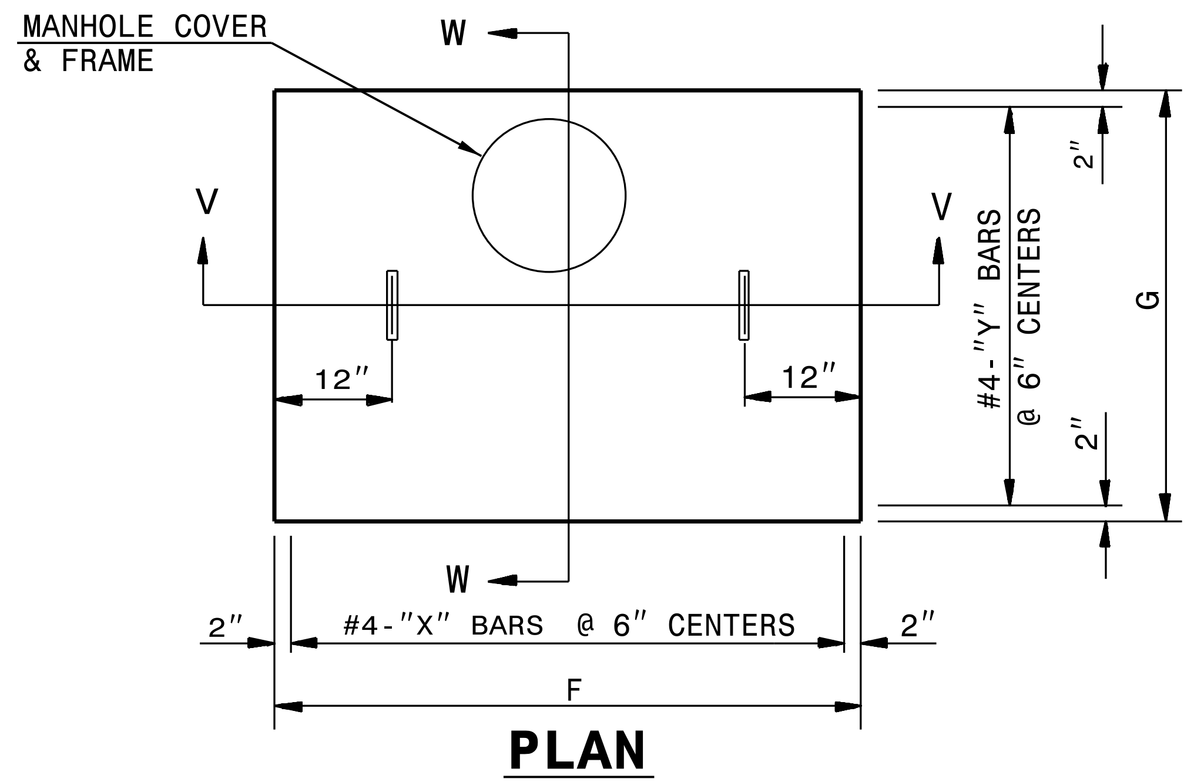
MANHOLE COVER & FRAME
W
V
12"
#4-"Y" BARS @ 6" CENTERS
G
2"
#4-"X" BARS @ 6" CENTERS
F

PLAN

PLAN OF PRECAST COVER

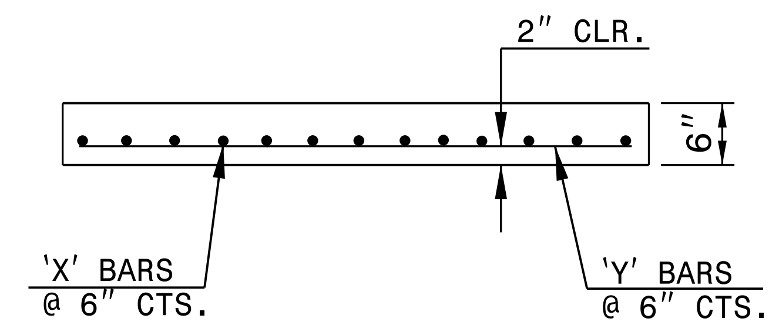
2" CLR.
6"
'X' BARS @ 6" CTS.
'Y' BARS @ 6" CTS.

SECTION V-V

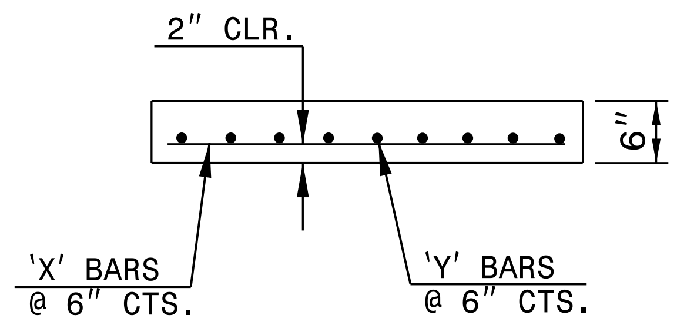
2" CLR.
6"
'X' BARS @ 6" CTS.
'Y' BARS @ 6" CTS.

SECTION W-W

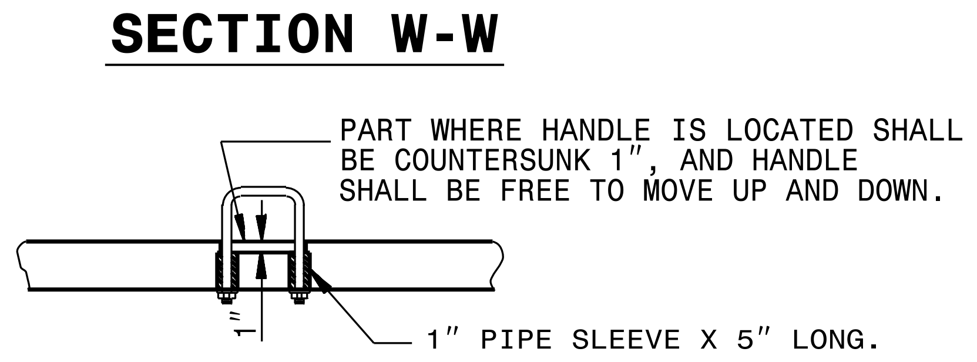
PART WHERE HANDLE IS LOCATED SHALL BE COUNTERSUNK 1", AND HANDLE SHALL BE FREE TO MOVE UP AND DOWN.
1"
1" PIPE SLEEVE X 5" LONG.

PART SECTION

THRU COVER SHOWING HANDLE

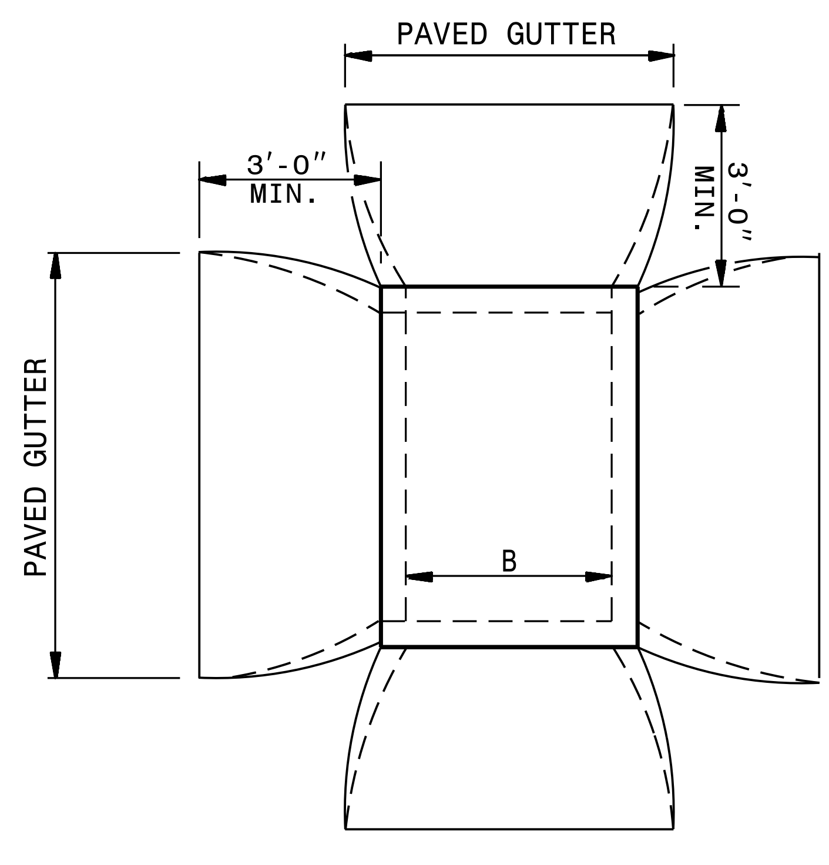
PAVED GUTTER
3'-0" MIN.
B

PLAN OF CATCH BASIN IN MEDIAN STRIP

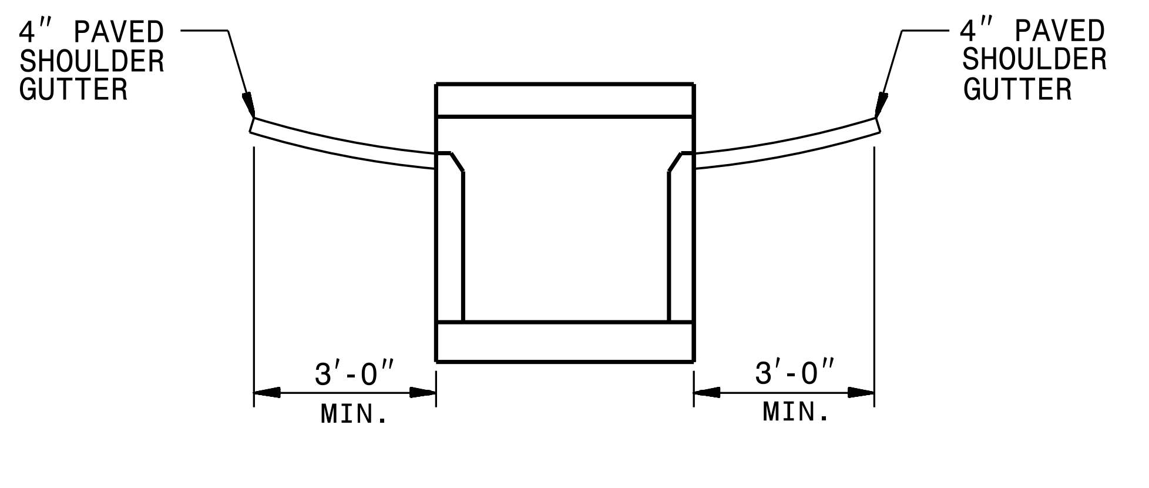
4" PAVED SHOULDER GUTTER
3'-0" MIN.

SECTION OF CATCH BASIN MEDIAN STRIP

DETAIL SHOWING METHOD OF PLACING
CATCH BASIN AND PAVED SHOULDER GUTTER

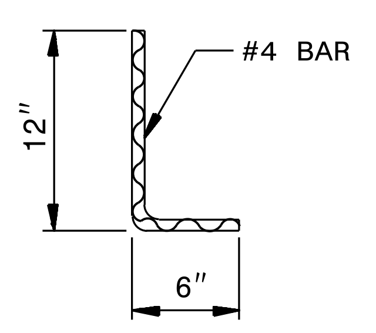

DOWEL

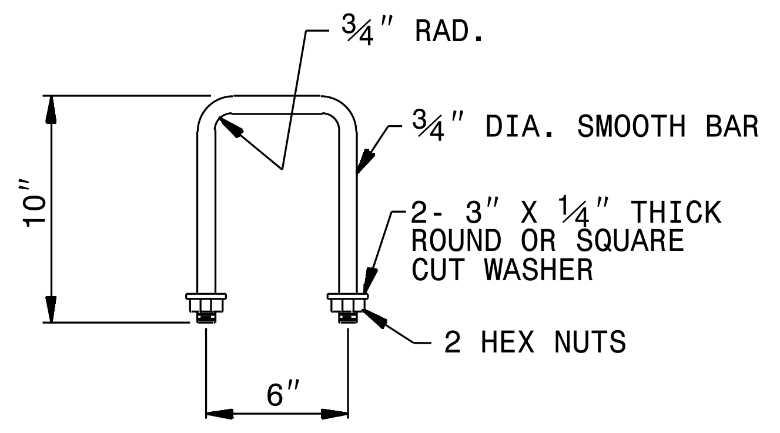
¾" RAD.
¾" DIA. SMOOTH BAR
2- 3" X ¼" THICK ROUND OR SQUARE CUT WASHER
2 HEX NUTS
10"
6"

DETAIL OF HANDLE

SEAL
33144
Nicole Hackler
10/6/2023

DOCUMENT NOT CONSIDERED FINAL UNLESS ALL SIGNATURES COMPLETED

CONTRACT STANDARDS AND DEVELOPMENT UNIT
Office 919-707-6950 FAX 919-250-4119

SEE PLATE FOR TITLE

ORIGINAL BY: DATE:
MODIFIED BY: rnbritt DATE: 07-03-2014
CHECKED BY: DATE:
FILE SPEC.: details/nbritt/english/hydro/840d04.dgn

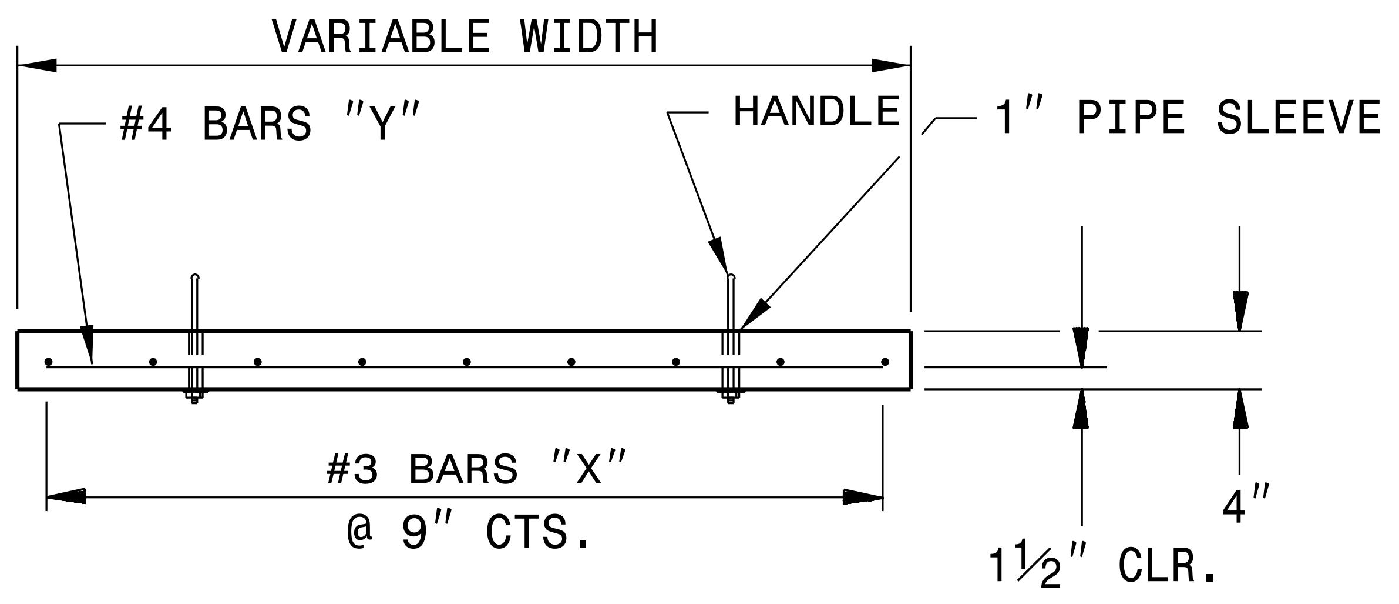
VARIABLE WIDTH
#4 BARS "Y"
HANDLE
1" PIPE SLEEVE
#3 BARS "X"
@ 9" CTS.
4"
1½" CLR.

SECTION V-V

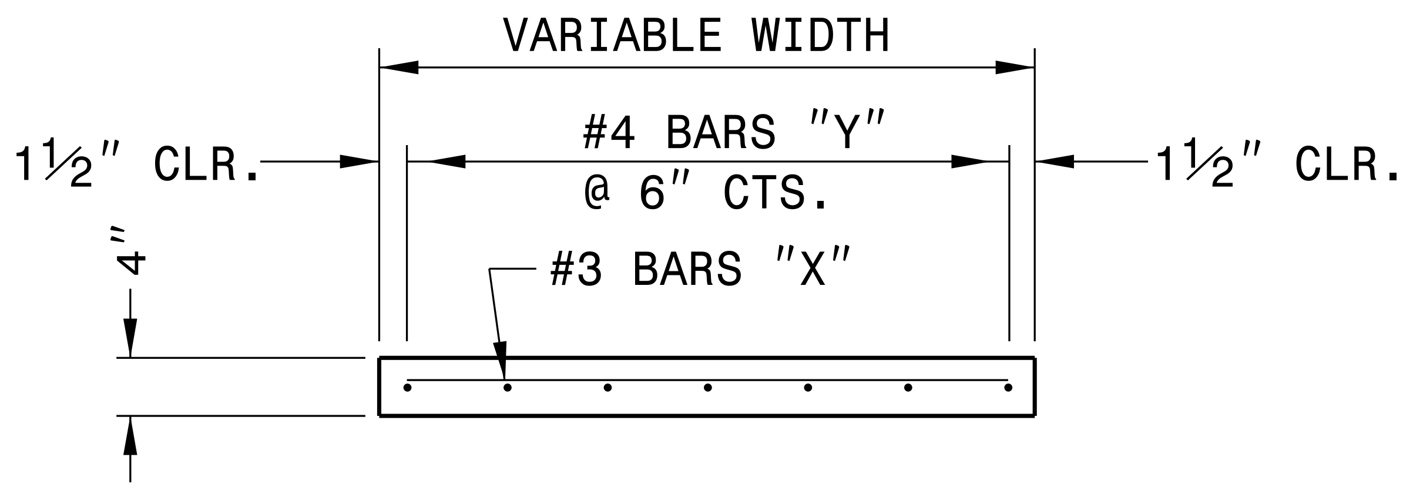
VARIABLE WIDTH
1½" CLR.
#4 BARS "Y"
@ 6" CTS.
1½" CLR.
#3 BARS "X"
4"

SECTION W-W

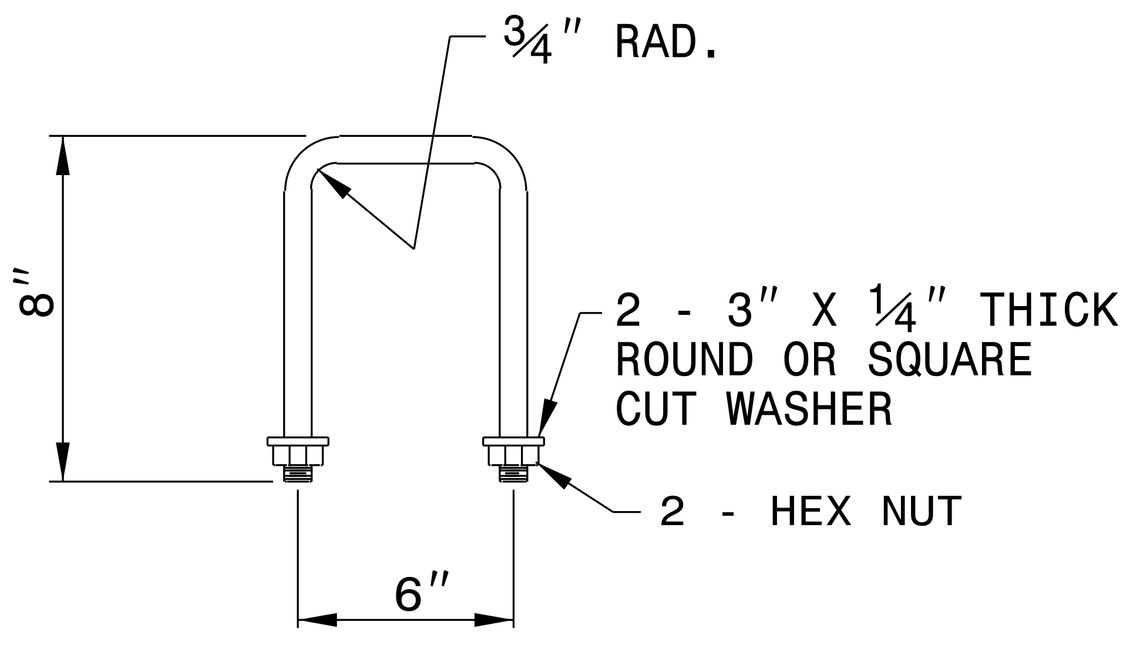
¾" RAD.
8"
2 - 3" X ¼" THICK
ROUND OR SQUARE
CUT WASHER
2 - HEX NUT
6"

DETAIL OF HANDLE

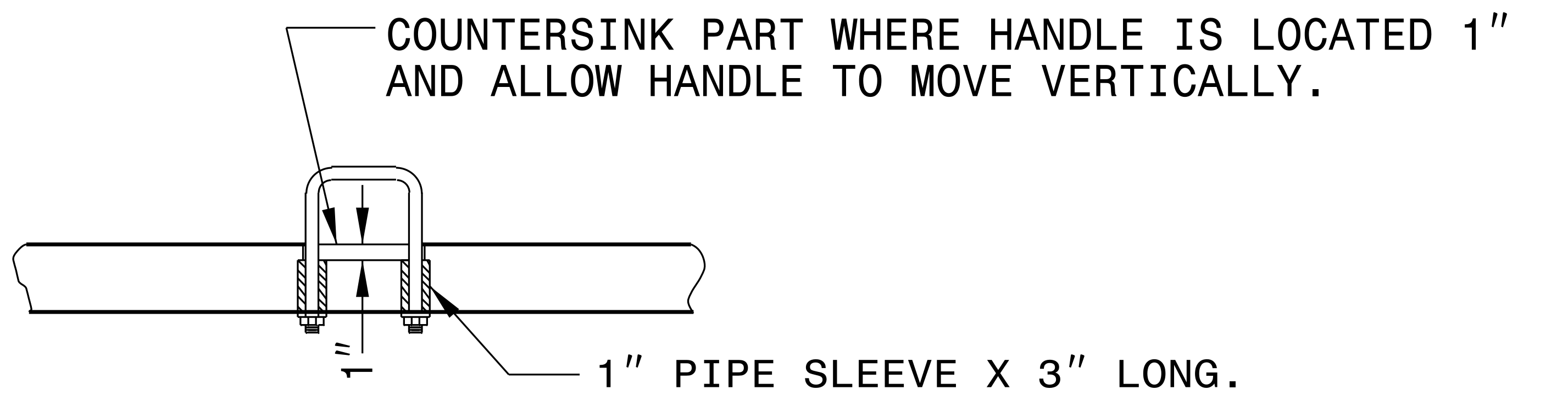
COUNTERSINK PART WHERE HANDLE IS LOCATED 1"
AND ALLOW HANDLE TO MOVE VERTICALLY.
1"
1" PIPE SLEEVE X 3" LONG.

PART SECTION

THRU COVER SHOWING HANDLE

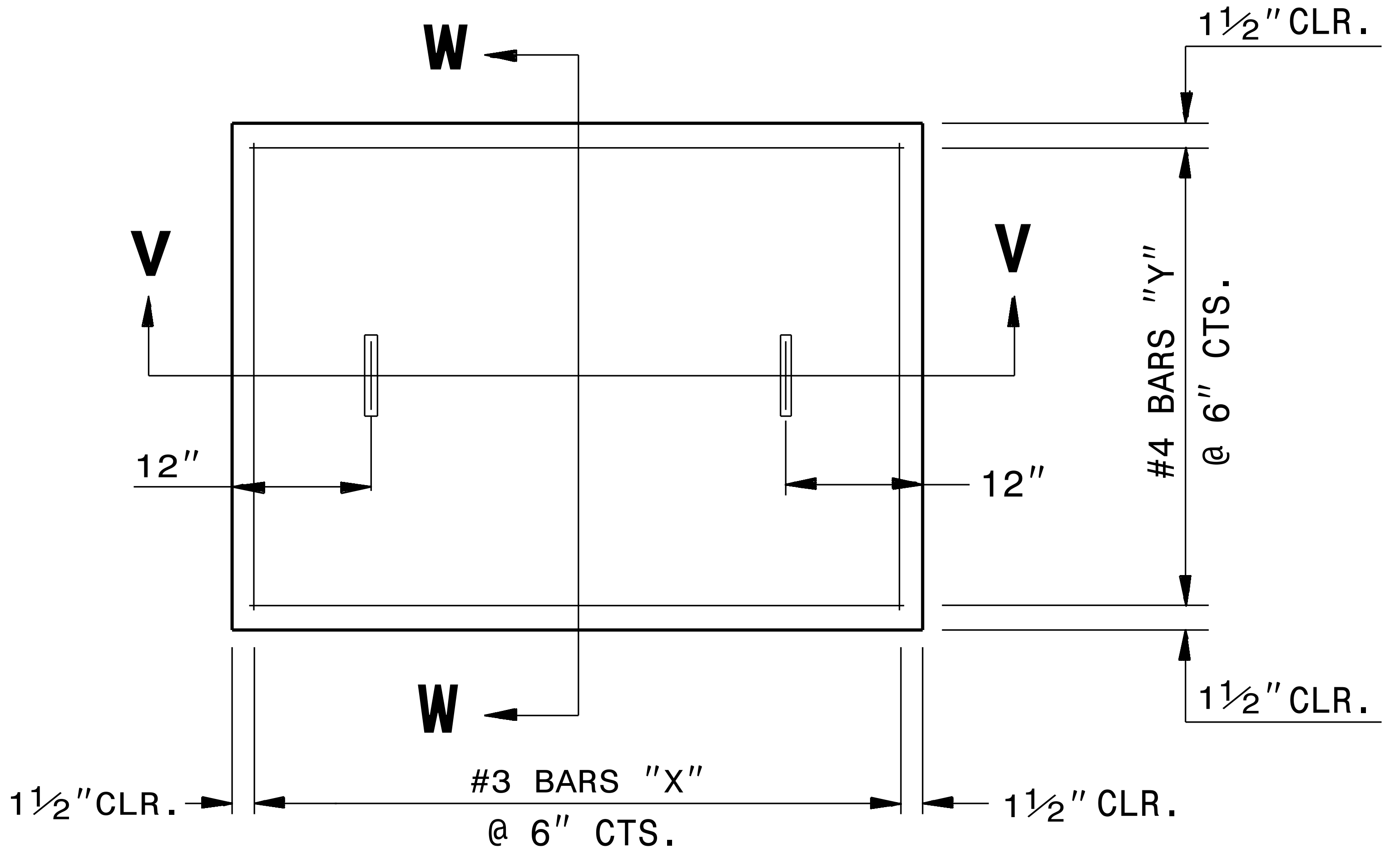
W
W
V
V
1½" CLR.
#4 BARS "Y"
@ 6" CTS.
1½" CLR.
12"
12"
1½"CLR.
#3 BARS "X"
@ 6" CTS.
1½"CLR.

PLAN

PRECAST OR CAST IN PLACE TOP SLAB

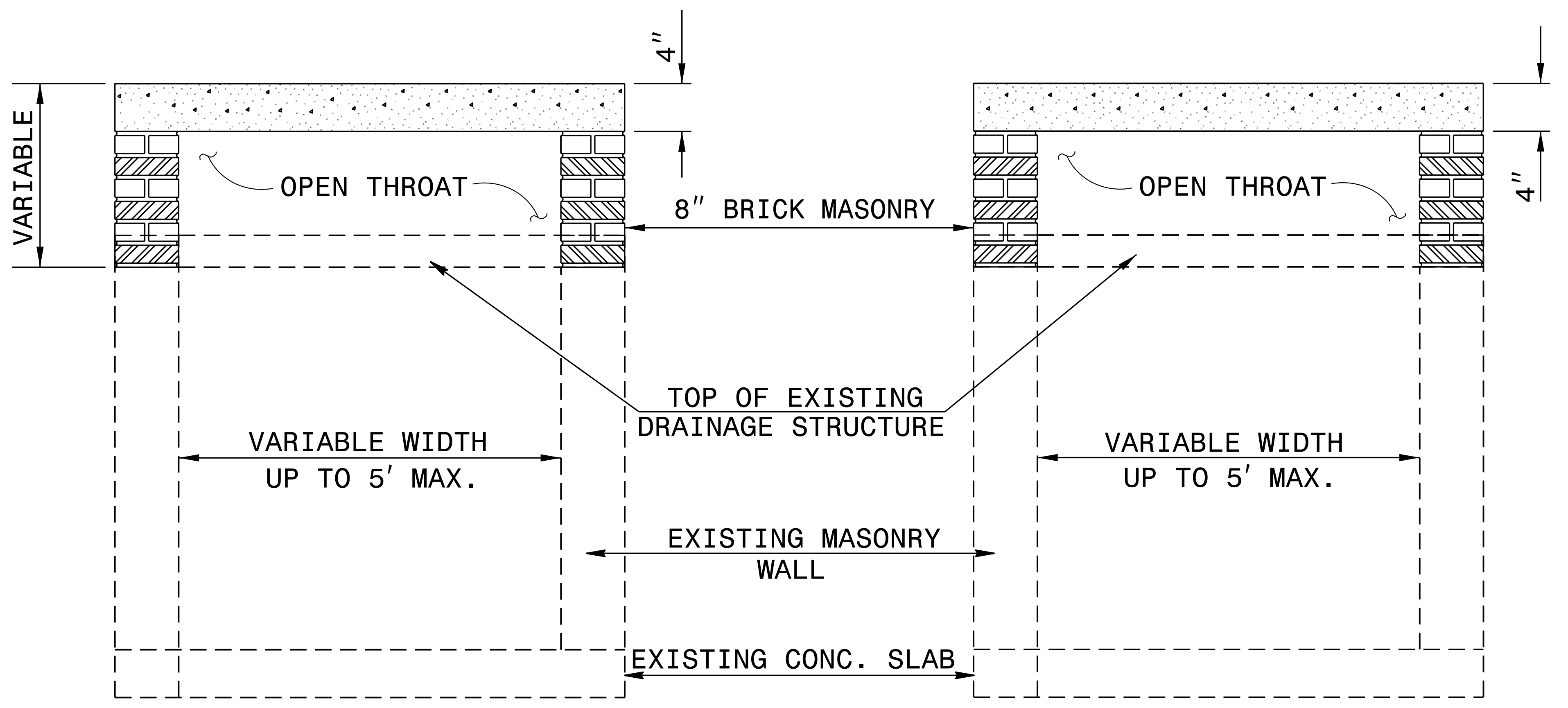
4"
VARIABLE
OPEN THROAT
8" BRICK MASONRY
OPEN THROAT
4"
TOP OF EXISTING
DRAINAGE STRUCTURE
VARIABLE WIDTH
UP TO 5' MAX.
VARIABLE WIDTH
UP TO 5' MAX.
EXISTING MASONRY
WALL
EXISTING CONC. SLAB

SECTION W-W

SECTION V-V

GENERAL NOTES:

CONSTRUCT IN ACCORDANCE WITH SECTION 859 OF THE STANDARD SPECIFICATIONS.

THE DIMENSIONS FOR THE EXISTING BOXES ARE APPROXIMATE AND MAY VARY SLIGHTLY.

DETAIL INTENDED FOR NON-TRAFFIC BEARING DRAINAGE STRUCTURES.

BILL OF MATERIALS

REINFORCING STEEL

CODE	SIZE	QTY.	LENGTH	REINF. STEEL lbs.
X	#3	9	3'-1"	10.4
Y	#4	7	4'-1"	19.1
		TOTAL		29.5 *
MASONRY				CY
TOP SLAB CONCRETE CLASS "B"				0.1783 *
BRICK MASONRY PER FT HT (MIN)				0.3127 *

NO DEDUCTIONS HAVE BEEN TAKEN FOR OPEN THROAT OPENINGS

***** NOTE:
QUANTITIES BASED ON 3'-0" X 2'-0" DRAINAGE STRUCTURE. ADJUST QUANTITIES FOR LARGER STRUCTURES.

SEAL 33144
NICOLE M. HACKLER

DocuSigned by:
Nicole M. Hackler
5884323D34164C5...
10/6/2023

DOCUMENT NOT CONSIDERED FINAL
UNLESS ALL SIGNATURES COMPLETED

CONTRACT STANDARDS
AND DEVELOPMENT UNIT
Office 919-707-6950 FAX 919-250-4119

DETAIL TO CONVERT EXISTING DRAINAGE BOX TO OPEN THROAT CATCH BASIN

ORIGINAL BY: E.E. WARD DATE: 9-02-03
MODIFIED BY: DATE:
CHECKED BY: DATE:
FILE SPEC.: s:usr/details/stand/cbto_openthrt.dgn

5/14/99

16-JUN-2017 09:57
S:\Contracts\Contracts\Special Details\jhowerton\Convert Box to OTCB.dgn
jhowerton AT CSD-292595

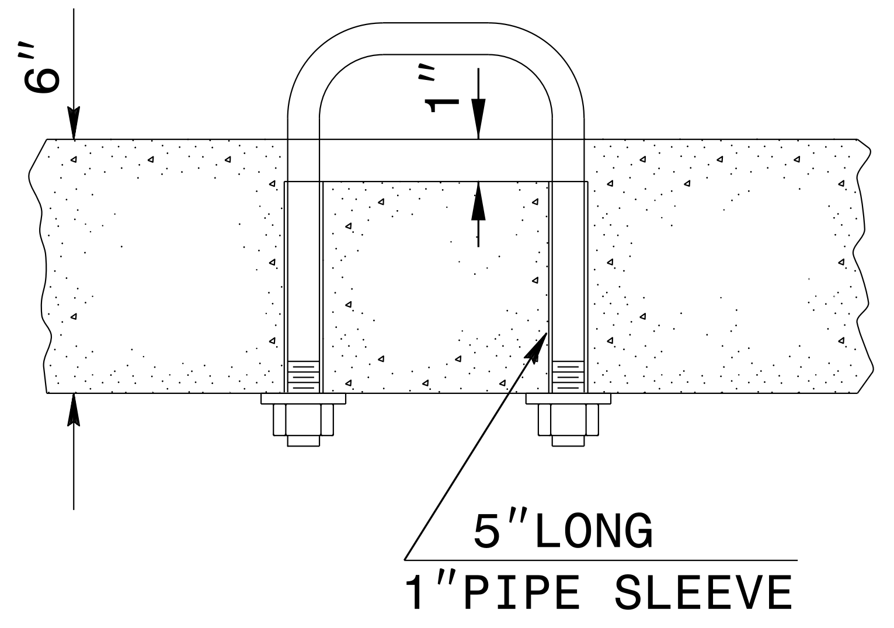
6"
1"
5"LONG
1"PIPE SLEEVE

PARTIAL SECTION

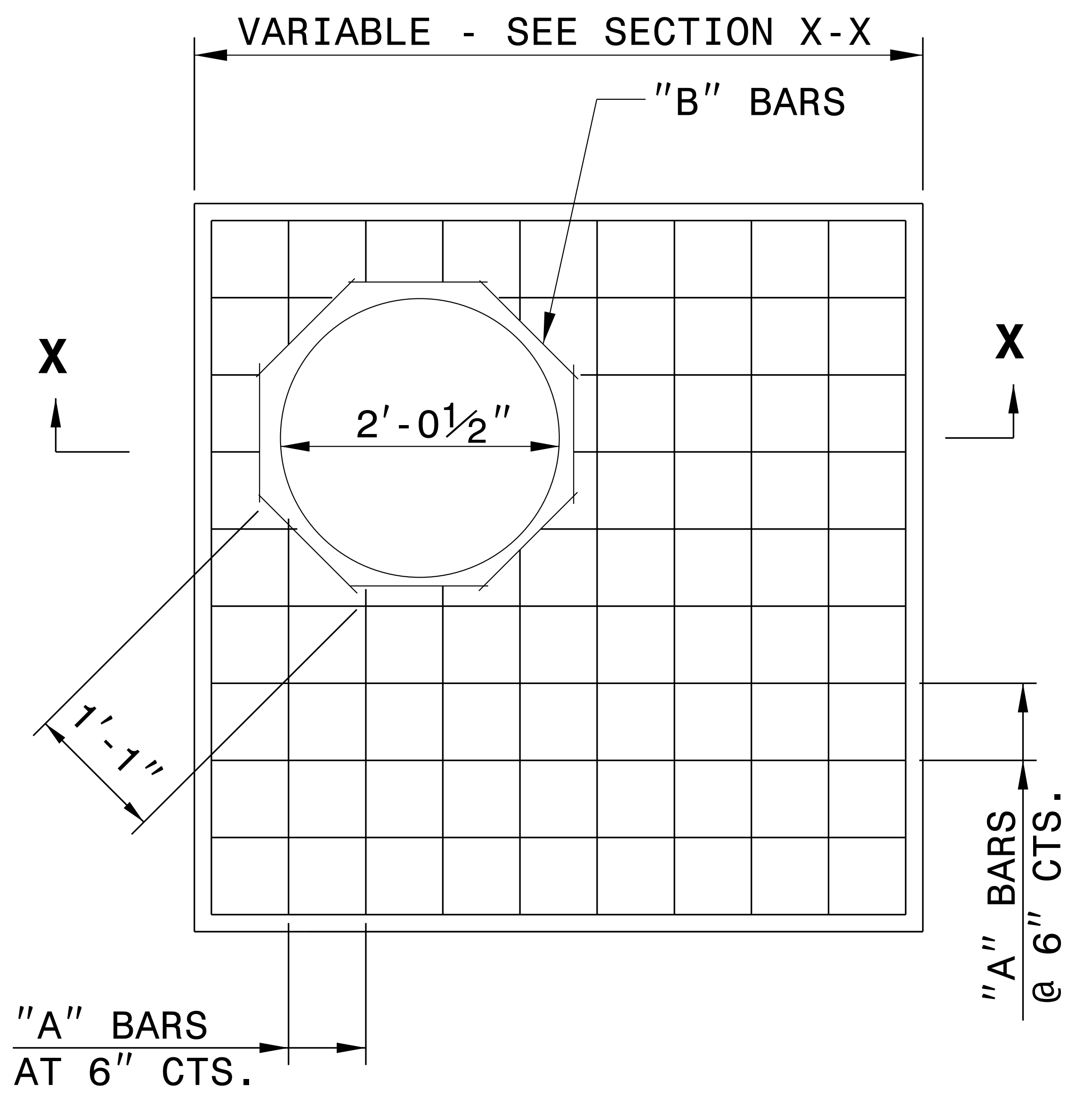
VARIABLE - SEE SECTION X-X
"B" BARS
X
X
2'-0½"
1'-1"
"A" BARS @ 6" CTS.
"A" BARS AT 6" CTS.

PLAN

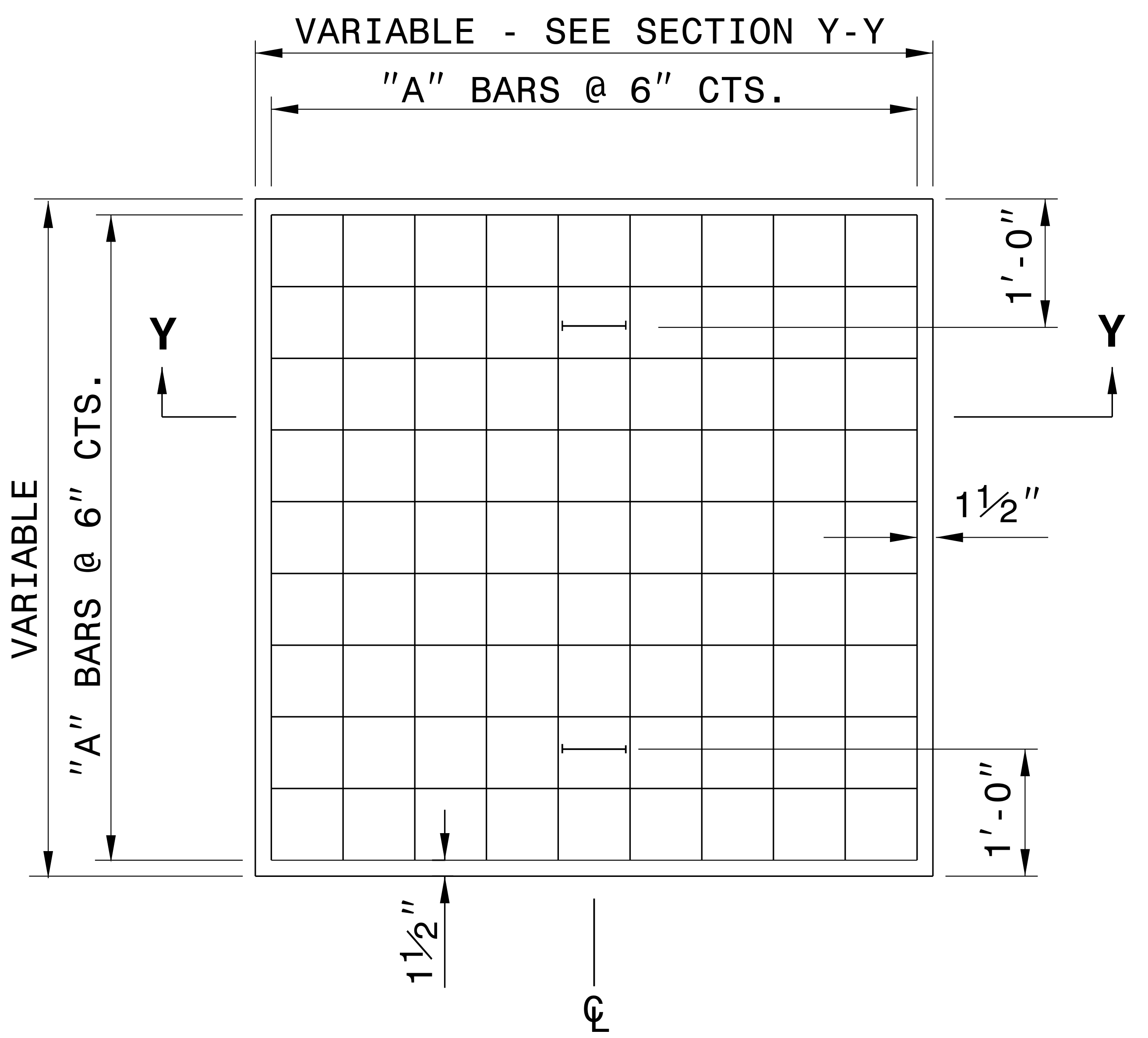
VARIABLE - SEE SECTION Y-Y
"A" BARS @ 6" CTS.
Y
Y
VARIABLE
"A" BARS @ 6" CTS.
1'-0"
1½"
1'-0"
1½"
℄

PLAN

GENERAL NOTES:

CONSTRUCT IN ACCORDANCE WITH SECTION 859 OF THE STANDARD SPECIFICATIONS.

THE DIMENSIONS FOR THE EXISTING BOXES ARE APPROXIMATE AND MAY VARY SLIGHTLY.

DETAIL INTENDED FOR NON-TRAFFIC BEARING DRAINAGE STRUCTURES.

BILL OF MATERIALS

REINFORCING STEEL				
CODE	SIZE	QTY.	LENGTH	REINF. STEEL LBS.
A	#4	20	4'-6"	60.12
B	#4	8	1'-1"	5.79
TOTAL				65.91 *

MASONRY	CU YDS
TOP SLAB CONCRETE CLASS "B"	.4326 *
BRICK MASONRY PER FT HT (MIN)	.4111

*** NOTE:**
QUANTITIES BASED ON 3'-6" X 3'-6" DRAINAGE STRUCTURE. ADJUST QUANTITIES FOR LARGER STRUCTURES AND MANHOLE CONSTRUCTION.

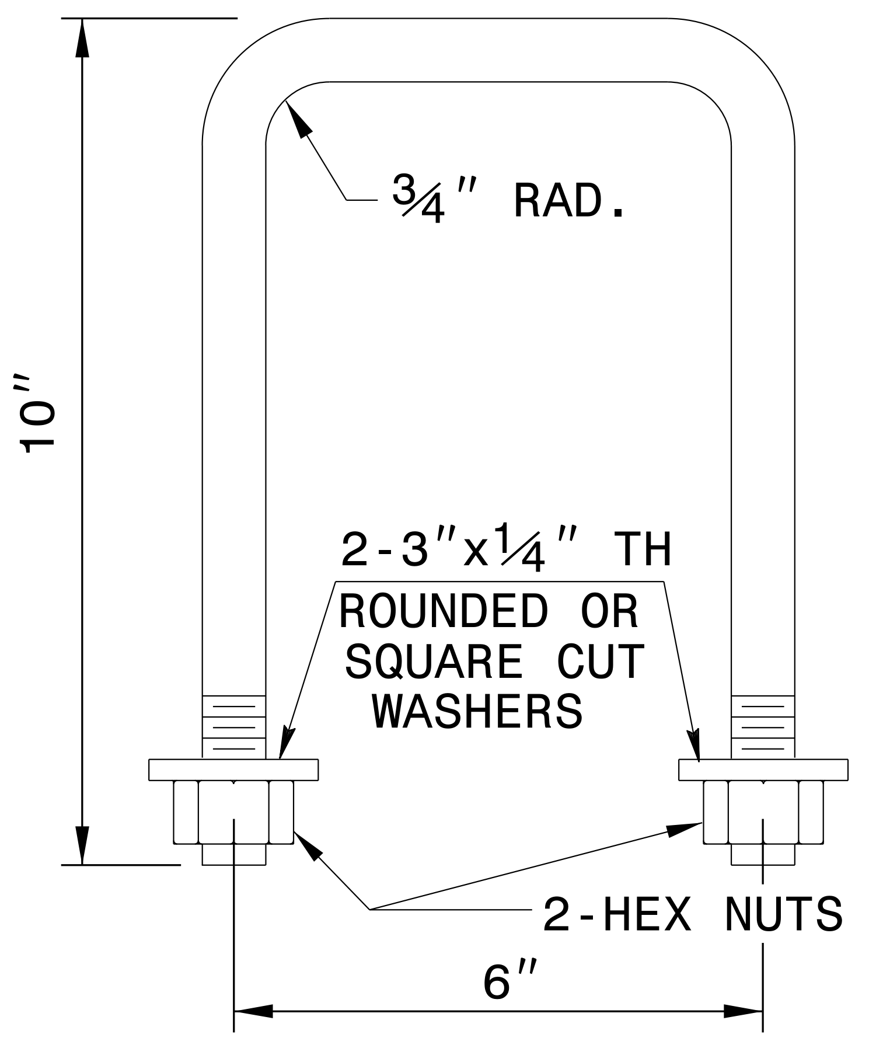
¾" RAD.
10"
2-3"x¼" TH
ROUNDED OR
SQUARE CUT
WASHERS
2-HEX NUTS
6"

DETAIL OF HANDLE

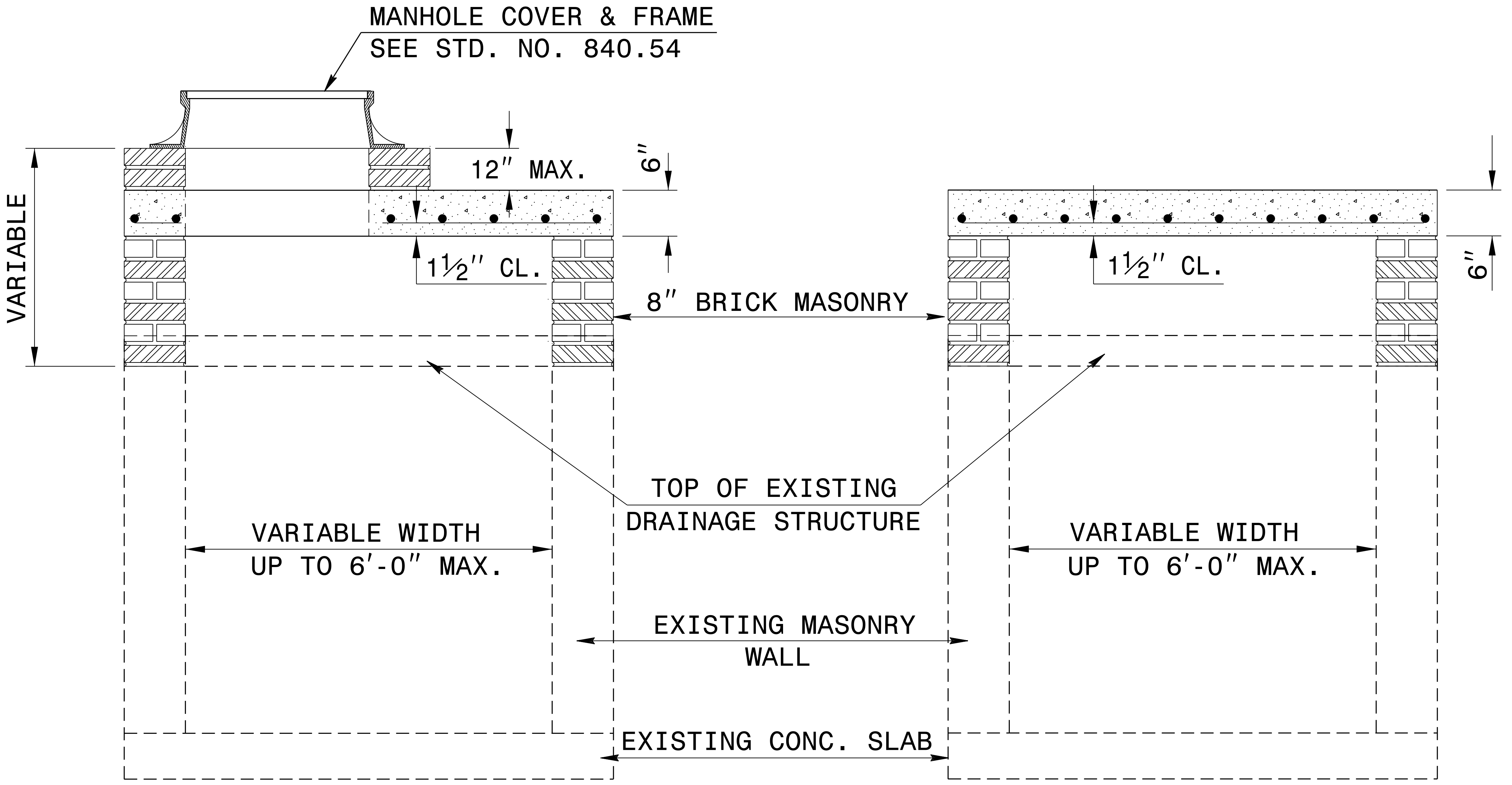
MANHOLE COVER & FRAME
SEE STD. NO. 840.54
12" MAX.
6"
VARIABLE
1½" CL.
8" BRICK MASONRY
1½" CL.
6"
TOP OF EXISTING
DRAINAGE STRUCTURE
VARIABLE WIDTH
UP TO 6'-0" MAX.
VARIABLE WIDTH
UP TO 6'-0" MAX.
EXISTING MASONRY
WALL
EXISTING CONC. SLAB

SECTION X-X

SECTION Y-Y

SEAL 33144
NICOLE M. HACKLER
Nicole M. Hackler
10/6/2023

DOCUMENT NOT CONSIDERED FINAL
UNLESS ALL SIGNATURES COMPLETED

CONTRACT STANDARDS
AND DEVELOPMENT UNIT
Office 919-707-6950 FAX 919-250-4119

**DETAIL TO CONVERT EXISTING
DI, CB, OTCB or GI
TO JUNCTION BOX
(MANHOLE OPTIONAL)**

ORIGINAL BY: T.S.S. DATE: NOV.1997
MODIFIED BY: T.S.S. DATE: FEB.2000
CHECKED BY: DATE:
FILE SPEC.: ds174:/usr/details/stand/boxtojbe.dgn

STATE OF
NORTH CAROLINA
DEPT. OF TRANSPORTATION
DIVISION OF HIGHWAYS
RALEIGH, N.C.

ROADWAY DETAIL DRAWING FOR
ROCK PLATING

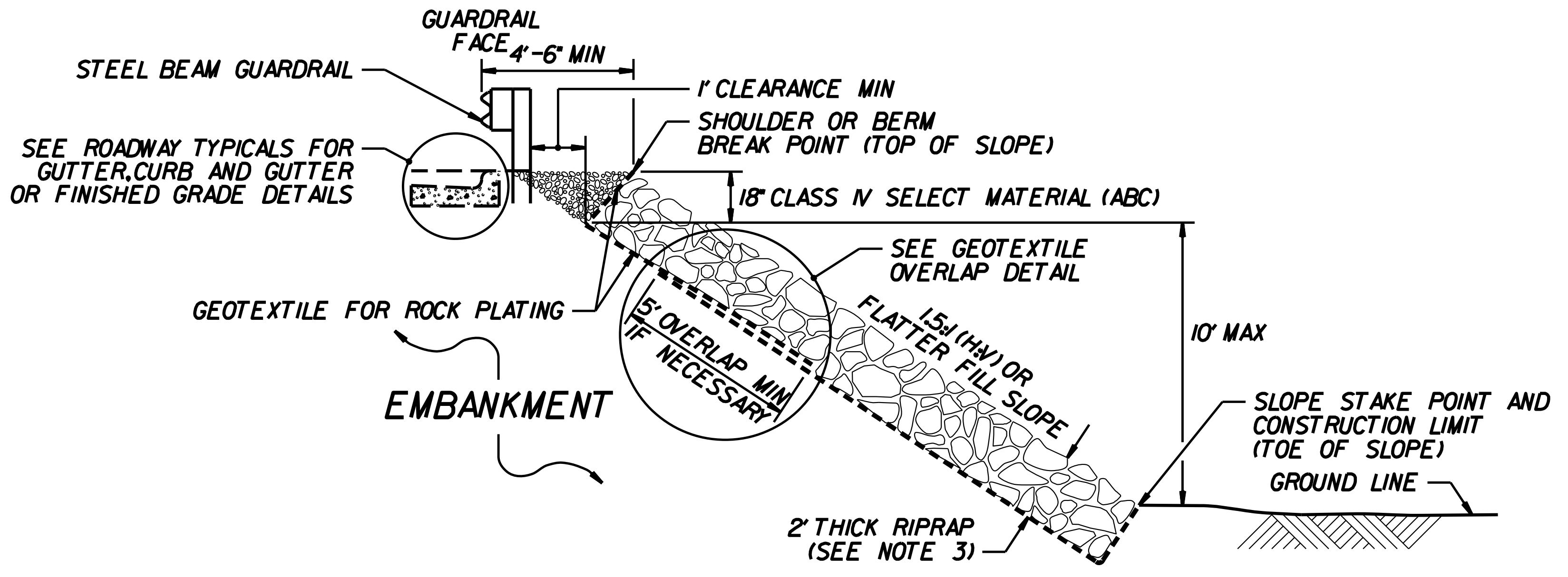

GUARDRAIL FACE
4'-6" MIN
STEEL BEAM GUARDRAIL
1' CLEARANCE MIN
SHOULDER OR BERM BREAK POINT (TOP OF SLOPE)
SEE ROADWAY TYPICALS FOR GUTTER,CURB AND GUTTER OR FINISHED GRADE DETAILS
18" CLASS IV SELECT MATERIAL (ABC)
SEE GEOTEXTILE OVERLAP DETAIL
GEOTEXTILE FOR ROCK PLATING
1.5:1 (H:V) OR FLATTER FILL SLOPE
10' MAX
5' OVERLAP MIN IF NECESSARY
EMBANKMENT
SLOPE STAKE POINT AND CONSTRUCTION LIMIT (TOE OF SLOPE)
GROUND LINE
2' THICK RIPRAP (SEE NOTE 3)

ROCK PLATING DETAIL NO. 1 – TYPICAL SECTION

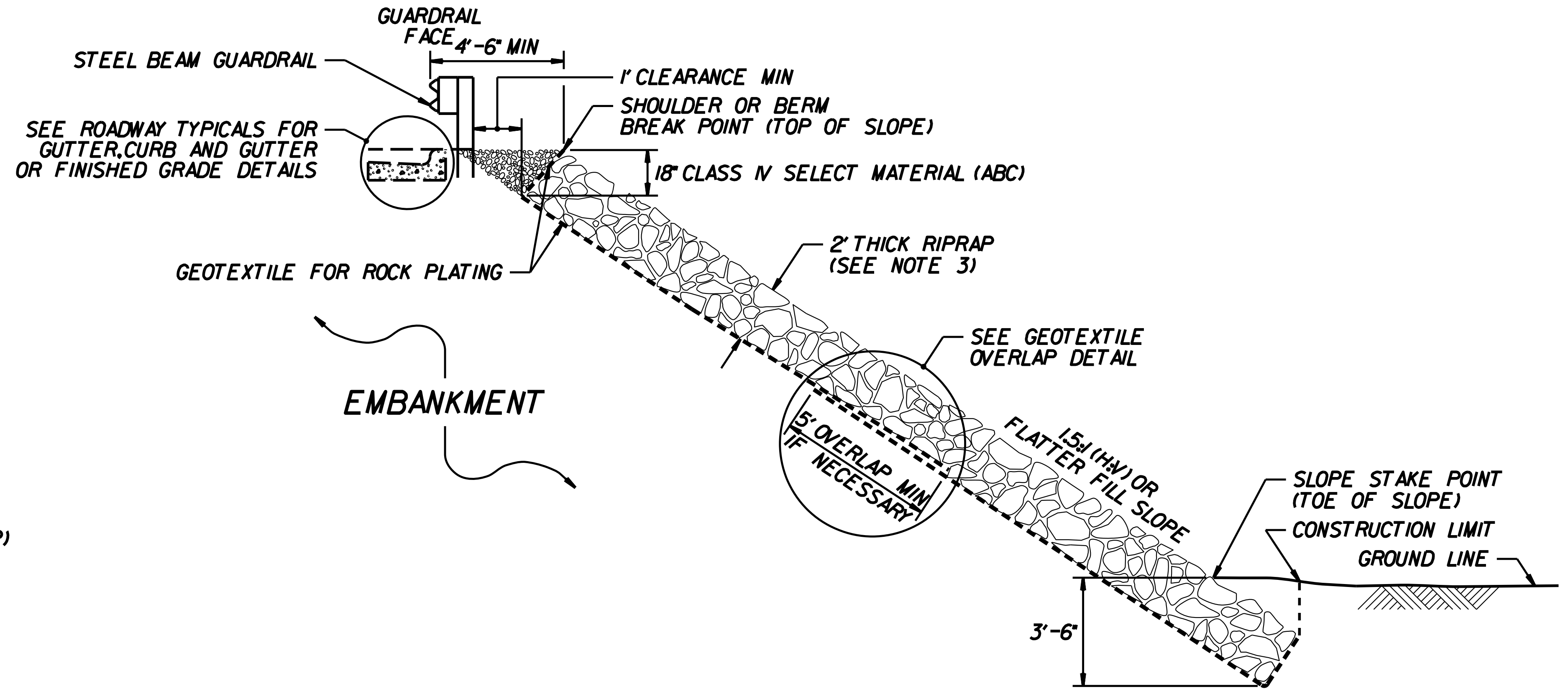

GUARDRAIL FACE
4'-6" MIN
STEEL BEAM GUARDRAIL
1' CLEARANCE MIN
SHOULDER OR BERM BREAK POINT (TOP OF SLOPE)
SEE ROADWAY TYPICALS FOR GUTTER,CURB AND GUTTER OR FINISHED GRADE DETAILS
18" CLASS IV SELECT MATERIAL (ABC)
2' THICK RIPRAP (SEE NOTE 3)
GEOTEXTILE FOR ROCK PLATING
SEE GEOTEXTILE OVERLAP DETAIL
EMBANKMENT
5' OVERLAP MIN IF NECESSARY
1.5:1 (H:V) OR FLATTER FILL SLOPE
SLOPE STAKE POINT (TOE OF SLOPE)
CONSTRUCTION LIMIT
GROUND LINE
3'-6"

ROCK PLATING DETAIL NO. 2 – TYPICAL SECTION

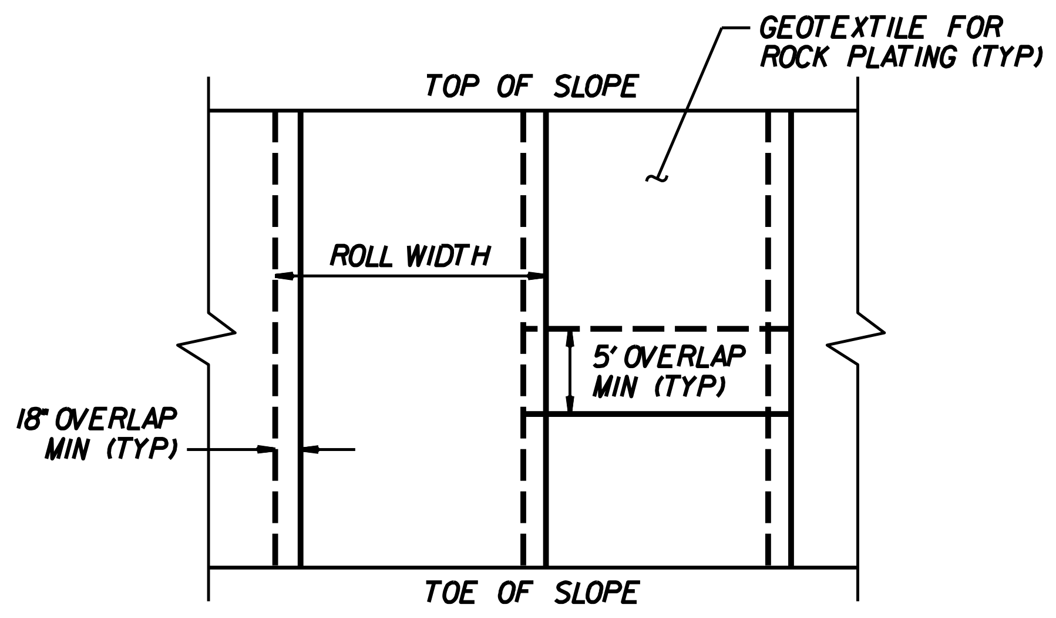

GEOTEXTILE FOR ROCK PLATING (TYP)
TOP OF SLOPE
ROLL WIDTH
5' OVERLAP MIN (TYP)
18" OVERLAP MIN (TYP)
TOE OF SLOPE

GEOTEXTILE OVERLAP DETAIL

(PLAN VIEW)

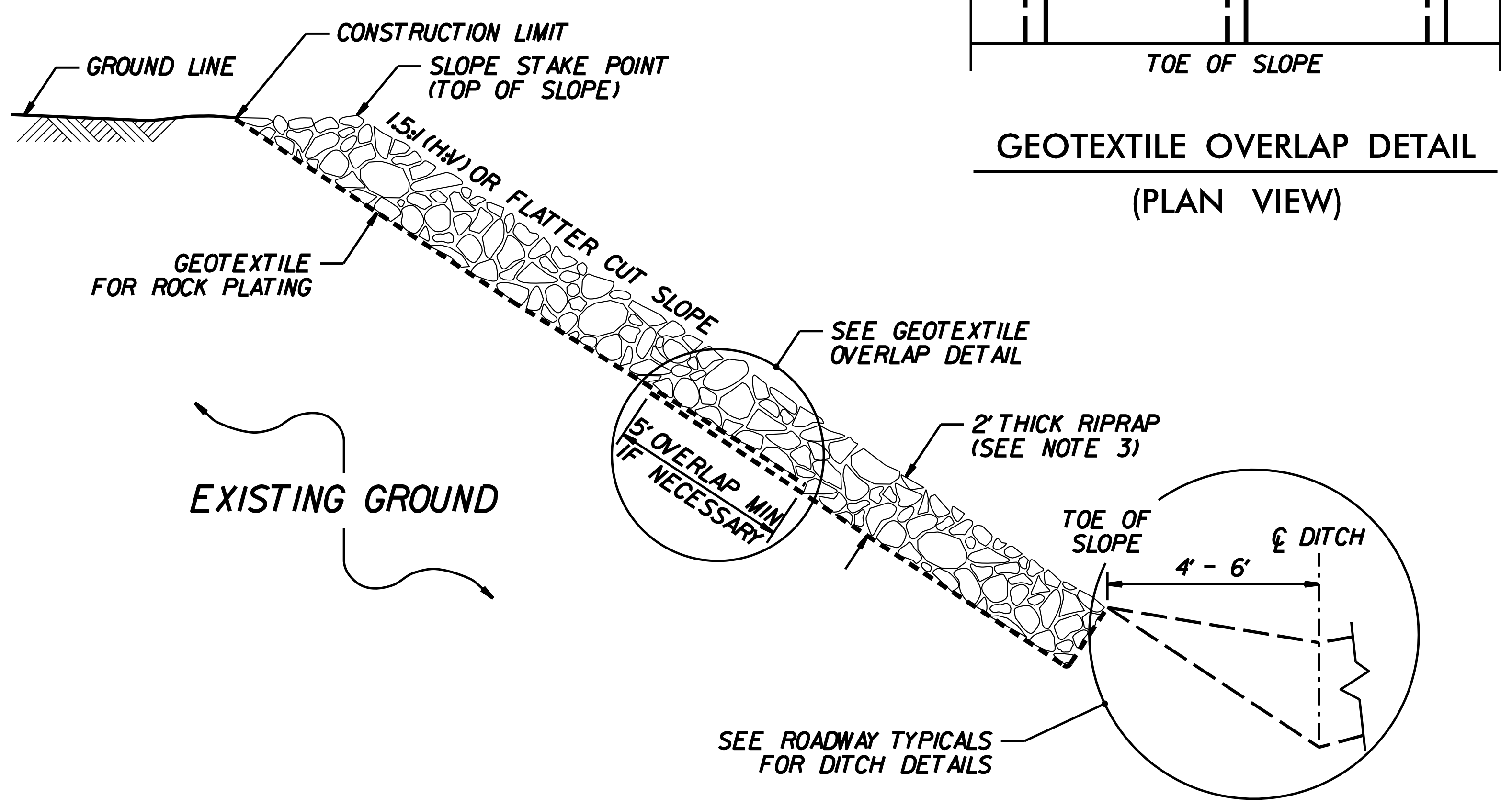

GROUND LINE
CONSTRUCTION LIMIT
SLOPE STAKE POINT (TOP OF SLOPE)
1.5:1 (H:V) OR FLATTER CUT SLOPE
GEOTEXTILE FOR ROCK PLATING
SEE GEOTEXTILE OVERLAP DETAIL
2' THICK RIPRAP (SEE NOTE 3)
EXISTING GROUND
5' OVERLAP MIN IF NECESSARY
TOE OF SLOPE
4' - 6'
℄ DITCH
SEE ROADWAY TYPICALS FOR DITCH DETAILS

ROCK PLATING DETAIL NO. 3 – TYPICAL SECTION

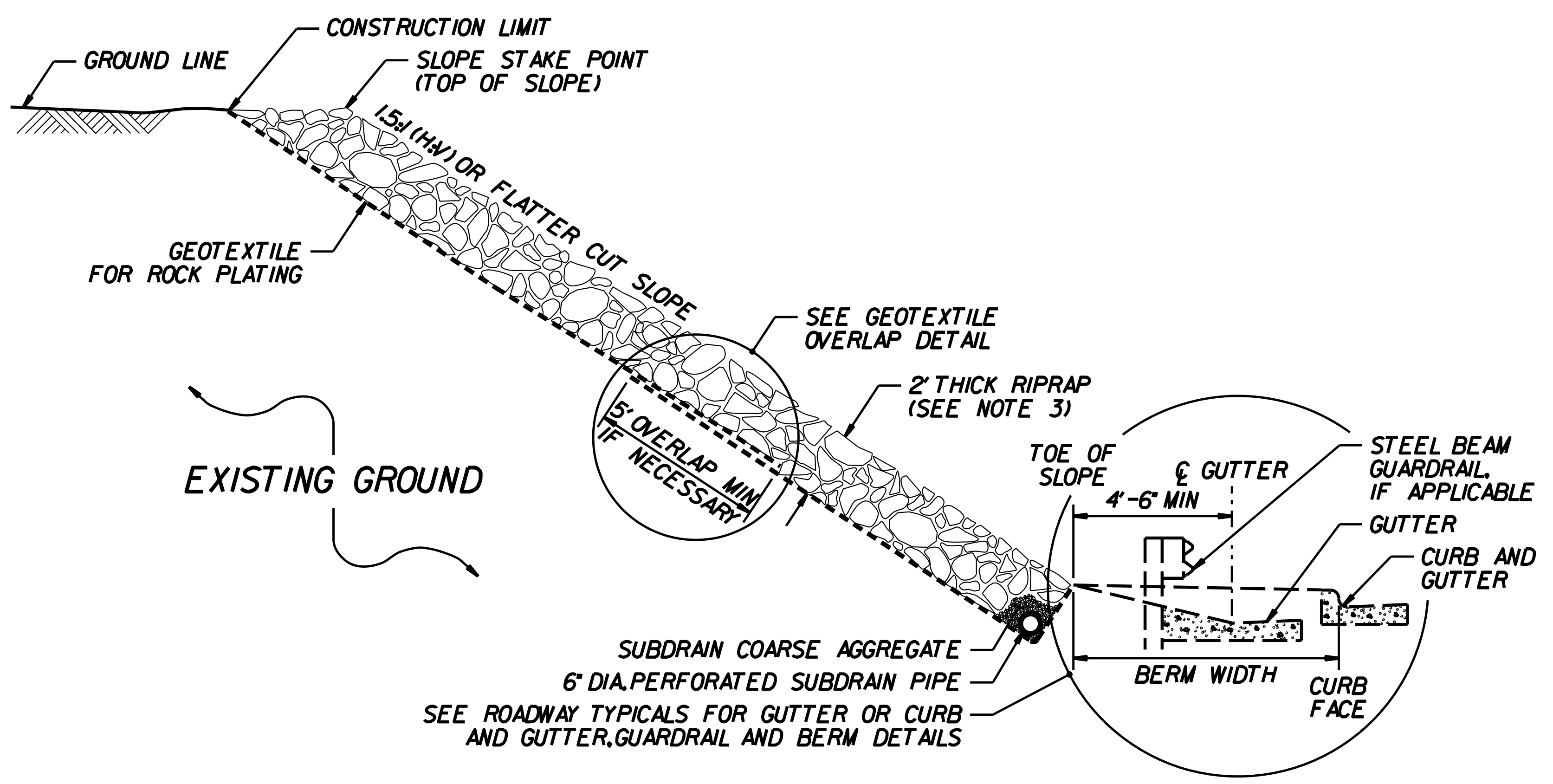

GROUND LINE
CONSTRUCTION LIMIT
SLOPE STAKE POINT (TOP OF SLOPE)
1.5:1 (H:V) OR FLATTER CUT SLOPE
GEOTEXTILE FOR ROCK PLATING
SEE GEOTEXTILE OVERLAP DETAIL
2' THICK RIPRAP (SEE NOTE 3)
EXISTING GROUND
5' OVERLAP MIN IF NECESSARY
TOE OF SLOPE
℄ GUTTER
4'-6" MIN
STEEL BEAM GUARDRAIL, IF APPLICABLE
GUTTER
CURB AND GUTTER
SUBDRAIN COARSE AGGREGATE
6" DIA.PERFORATED SUBDRAIN PIPE
SEE ROADWAY TYPICALS FOR GUTTER OR CURB AND GUTTER,GUARDRAIL AND BERM DETAILS
BERM WIDTH
CURB FACE

ROCK PLATING DETAIL NO. 4 – TYPICAL SECTION

NOTES:

1. SEE ROADWAY PLANS AND SUMMARY SHEETS FOR ROCK PLATING LOCATIONS.
2. FOR ROCK PLATING,SEE SECTION 275 OF THE STANDARD SPECIFICATIONS.
3. USE CLASS 1,2 OR B RIPRAP UNLESS REQUIRED OTHERWISE IN THE ROADWAY SUMMARY SHEETS.

SHEET 1 OF 1
275D01

STATE OF
NORTH CAROLINA
DEPT. OF TRANSPORTATION
DIVISION OF HIGHWAYS
RALEIGH, N.C.

ROADWAY DETAIL DRAWING FOR
ROCK PLATING

SHEET 1 OF 1
275D01

SEAL 33144
NICOLE M. HECHLER
10/30/2023
DocuSigned by:
Nicole M. Hechler
5884323D34164C5...

CONTRACT STANDARDS
AND DEVELOPMENT UNIT
Office 919-707-6900 FAX 919-250-4119

SEE TITLE BLOCK

ORIGINAL BY: S. HIDDEN DATE: 03-11-22
MODIFIED BY: DATE:
CHECKED BY: DATE:
FILE SPEC.:

PROJECT REFERENCE NO.	SHEET NO.
R-5861	2D-1
R/W SHEET NO.	
ROADWAY DESIGN ENGINEER	HYDRAULICS ENGINEER
DocuSigned by: Brandon McInnis BE6912CC24204D4... SEAL 29470 BRANDON J. McINNIS 10/31/2023	DocuSigned by: Alexis Burke 0BE52EF5827E423... SEAL 46155 ALEXIS S. BURKE 10/30/2023

DOCUMENT NOT CONSIDERED FINAL UNLESS ALL SIGNATURES COMPLETED

DETAIL A
SPECIAL CUT DITCH
(Not to Scale)

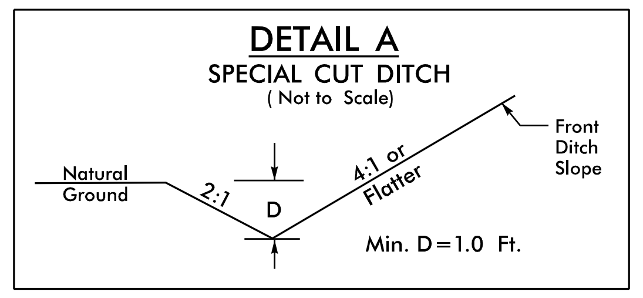
Natural Ground
2:1
D
4:1 or Flatter
Front Ditch Slope

Min. D=1.0 Ft.

–L– STA. 10+00 TO STA. 10+50 RT
–L– STA. 58+50 TO STA. 61+75 LT
–L– STA. 63+50 TO STA. 66+50 LT
–L– STA. 92+75 TO STA. 93+80 LT
–L– STA. 104+00 TO STA. 107+00 LT
–L– STA. 140+00 TO STA. 141+00 RT
–L– STA. 156+00 TO STA. 157+00 LT
–L– STA. 161+00 TO STA. 162+50 RT
–L– STA. 163+94 TO STA. 167+00 rt
–L– STA. 177+00 TO STA. 178+50 LT
–L– STA. 194+60 TO STA. 196+00 LT
–Y3– STA. 12+00 TO STA. 13+50 RT
–Y3A– STA. 12+00 TO STA. 12+50 RT
–Y10A– STA. 10+50 TO STA. 11+50 RT
–Y10A– STA. 10+50 TO STA. 11+73 LT
–Y10B– STA. 13+00 TO STA. 13+24 LT
–Y10B– STA. 11+50 TO STA. 12+00 LT
–DR8– STA. 11+62 TO STA. 12+22 RT
–DR17– STA. 10+50 TO STA. 10+97 LT
–L_DET2– STA. 23+20 TO STA. 23+71 LT

DETAIL B
LATERAL 'V' DITCH
(Not to Scale)

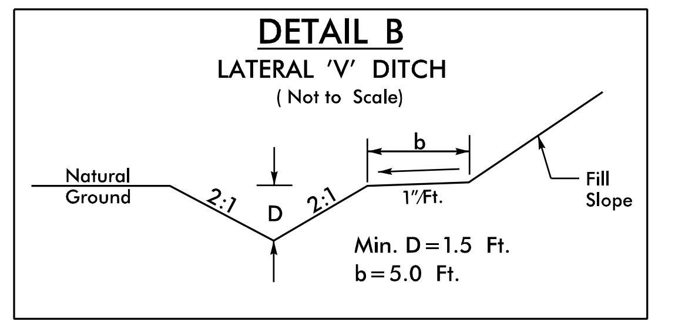
Natural Ground
2:1
D
2:1
b
1"/Ft.
Fill Slope

Min. D=1.5 Ft.
b=5.0 Ft.

–L– STA. 32+00 TO STA. 33+39 LT, DDE=555 CY
–L– STA. 34+35 TO STA. 36+36 RT, DDE=637 CY
–L– STA. 57+00 TO STA. 58+50 LT, DDE=70 CY
–L– STA. 68+50 TO STA. 71+00 LT, DDE=306 CY
–L– STA. 96+40 TO STA. 97+50 LT, DDE=168 CY
–L– STA. 127+77 TO STA. 128+42 LT, DDE=19 CY
–L– STA. 147+00 TO STA. 148+50 LT, DDE=79 CY
–L– STA. 157+00 TO STA. 157+40 LT, DDE=28 CY
–L– STA. 208+50 TO STA. 209+00 RT, DDE=27 CY
–Y10A– STA. 11+73 TO STA. 12+50 LT, DDE=52 CY
–Y11– STA. 10+50 TO STA. 12+00 LT, DDE=228 CY
–Y12– STA. 26+75 TO STA. 29+08 RT, DDE=102 CY
–L_DET1– STA. 18+93 TO STA. 19+93 RT, DDE=60 CY
–L_DET4– STA. 15+02 TO STA. 17+42 LT, DDE=332 CY
–L_DET6– STA. 22+58 TO STA. 23+12 LT, DDE=27 CY
–L_DET6– STA. 22+58 TO STA. 23+12 RT, DDE=100 CY
–L_DET6– STA. 25+81 TO STA. 29+11 RT, DDE=98 CY
–L_DET6– STA. 26+35 TO STA. 28+00 LT, DDE=97 CY

DETAIL C
SPECIAL LATERAL 'V' DITCH
(Not to Scale)

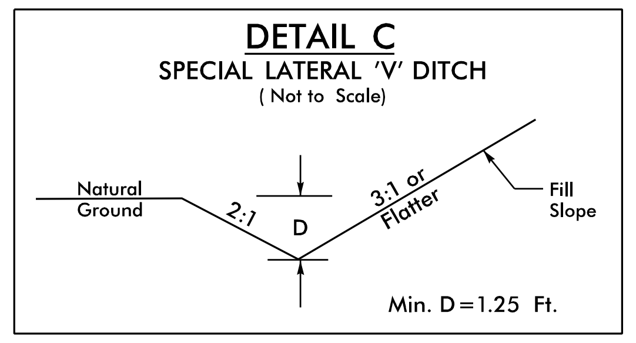
Natural Ground
2:1
D
3:1 or Flatter
Fill Slope

Min. D=1.25 Ft.

–L– STA. 73+50 TO STA. 77+50 RT
–L– STA. 141+00 TO STA. 142+30 RT
–L– STA. 143+50 TO STA. 144+00 RT
–Y4– STA. 14+10 TO STA. 14+80 LT
–L_DET4– STA. 33+03 TO STA. 34+00 LT
–L_DET6– STA. 11+04 TO STA. 12+69 RT

DETAIL D
CHANNEL CHANGE
(Not to Scale)

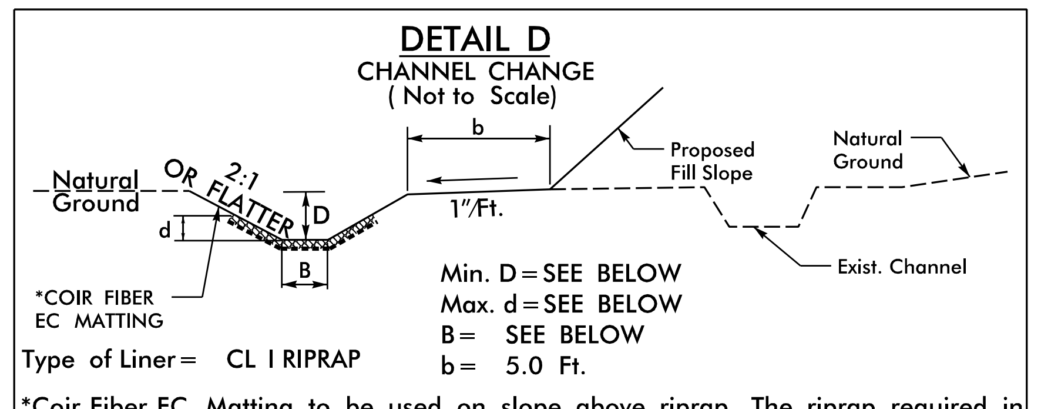
Natural Ground
2:1 OR FLATTER
D
d
B
b
1"/Ft.
Proposed Fill Slope
Natural Ground
Exist. Channel
*COIR FIBER EC MATTING

Min. D=SEE BELOW
Max. d=SEE BELOW
B= SEE BELOW
b= 5.0 Ft.
Type of Liner= CL I RIPRAP

*Coir Fiber EC Matting to be used on slope above riprap. The riprap required in the channel bottoms needs to be embedded into soil without liner and top–dressed with native materials to seal gaps

–L– STA. 12+39 TO STA. 13+13 LT, B=4', D/d=2.25'
DDE=164 CY, COIRFAB=94 SY, TONS=55
–L– STA. 13+48 RT, L=33', S=1.79%, B=4', D/d=2.75'
BEG. ELEV=1694.59, END ELEV=1694.00
DDE=164 CY, COIRFAB=63 SY, TONS=30
–DR1– STA. 10+35 RT, L=32', S=3.0%, B=3', D/d=2.75'
BEG. ELEV=1684.20, END ELEV=1683.24
DDE=32 CY, COIRFAB=58 SY, TONS=28
–L– STA. 33+39 LT, L=31', S=3.5=%, B=2'
BEG. ELEV=1738.76, END ELEV=1737.68
DDE=28 CY, COIRFAB=53 SY, TONS=25
–L– STA. 126+83 TO STA. 127+00 RT, L=17', S=4.1%, B=4',
BEG. ELEV=1635.89, END ELEV=1635.20
DDE=35 CY, COIRFAB=32 SY, TONS=16
–L– STA. 127+00 TO STA. 127+67 LT, L=67', S=3.0%, B=4',
BEG. ELEV=1635.20, END ELEV=1633.19
DDE=218 CY, COIRFAB=96 SY, TONS=45
–Y9– STA. 13+00 LT, L=61', S=4.51%, B=7', D/d=3.0'
BEG. ELEV=1639.65, END ELEV=1636.90
DDE=61 CY, COIRFAB=123 SY, TONS=58
–Y9– STA. 13+00 RT, L=115', S=1.37%, B=4', D/d=3.0'
BEG. EL=1634.40, END EL=1632.83
DDE=159 CY, COIRFAB=118 SY, TONS=56
–Y11– STA. 10+50 RT, L=118', S=14.7%, B=4', D/d=0.50'
BEG. ELEV=1734.0, END ELEV=1719.10
DDE=681 CY, COIRFAB=69 SY, TONS=31
–L_DET3– STA. 14+41 RT, L=183', S=2.1%, B=4', D/d=1.5'
BEG. ELEV=1641.25, END ELEV=1637.41
DDE=283 CY, COIRFAB=209 SY, TONS=94

DETAIL E
LATERAL 'V' DITCH
(Not to Scale)

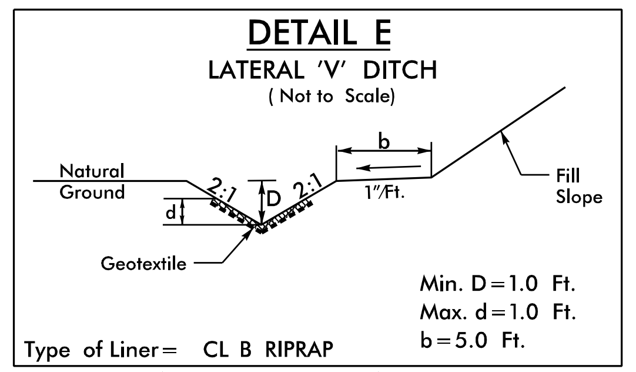
Natural Ground
2:1
D
2:1
d
b
1"/Ft.
Geotextile
Fill Slope

Min. D=1.0 Ft.
Max. d=1.0 Ft.
b=5.0 Ft.
Type of Liner= CL B RIPRAP

–L– STA. 50+33 TO STA. 50+78 LT
DDE=202 CY, GEOFAB=22 SY, TONS=10
–L– STA. 93+80 TO STA. 95+84 LT
DDE=1798, GEOFAB=101 SY, TONS=46
–L– STA. 97+50 TO STA. 98+50 LT
DDE=154 CY, GEOFAB=50 SY, TONS=22
–DR8– STA. 12+50 TO STA. 13+40 RT
DDE=88 CY, GEOFAB=45 SY, TONS=20
–L– STA. 157+40 TO STA. 158+00 LT
DDE=37 CY, GEOFAB=30 SY, TONS=13
–Y11– STA. 13+00 TO STA. 13+39 LT
DDE=26 CY, GEOFAB=58 SY, TONS=26
–L_DET4– STA. 17+42 TO STA. 18+44 LT
DDE=40 CY, GEOFAB=50 SY, TONS=23
–L_DET6– STA. 22+03 TO STA. 22+58 RT
DDE=100 CY, GEOFAB=23 SY, TONS=10
–L_DET6– STA. 22+03 TO STA. 22+58 LT
DDE=27 CY, GEOFAB=23 SY, TONS=10

DETAIL H
TOE PROTECTION
(Not to Scale)

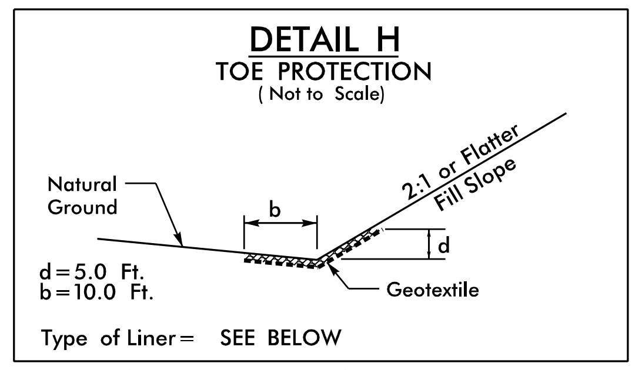
Natural Ground
b
2:1 or Flatter Fill Slope
d
Geotextile

d=5.0 Ft.
b=10.0 Ft.
Type of Liner= SEE BELOW

–L– STA. 33+70 TO STA. 34+75 LT, CL B
GEOFAB=175 SY, TONS=79
–L– STA. 36+43 TO STA. 36+90 RT, CL B
GEOFAB=169 SY, TONS=76
–L– STA. 50+90 TO STA. 52+32 LT, CL I
GEOFAB=511 SY, TONS=241
–L– STA. 56+22 TO STA. 58+66 RT, CL B
GEOFAB=158 SY, TONS=71
–L– STA. 73+96 TO STA. 75+15 LT, CL B
GEOFAB=428 SY, TONS=193
–L– STA. 81+76 TO STA. 82+93 RT, CL I
GEOFAB=421 SY, TONS=199
–L– STA. 85+00 TO STA. 85+60 RT, CL B
GEOFAB=216 SY, TONS=97
–L– STA. 101+12 TO STA. 101+65 LT, CL B
GEOFAB=191 SY, TONS=86
–L– STA. 127+70 TO STA. 129+50 RT, CL I
GEOFAB=647 SY, TONS=306
–L– STA. 145+00 TO STA. 145+50 LT, CL B
GEOFAB=180 SY, TONS=81
–L– STA. 149+00 TO STA. 150+00 RT, CL I
GEOFAB=360 SY, TONS=170
–L– STA. 177+05 TO STA. 177+65 RT, CL B
GEOFAB=216 SY, TONS=97
–L– STA. 181+13 TO STA. 182+00 RT, CL B
GEOFAB=313 SY, TONS=141
–L– STA. 194+45 TO STA. 195+25 RT. CL B
GEOFAB=360 SY, TONS=162
–Y1– STA. 13+80 TO STA. 15+65 RT, CL B
GEOFAB=665 SY, TONS=299
–Y3– STA. 12+00 TO STA. 12+50 LT, CL B
GEOFAB=180 SY, TONS=81
–DR27– STA. 9+82 TO STA. 11+35 LT, CL B
GEOFAB=550 SY, TONS=248
–Y5– STA. 10+50 TO STA. 11+30 LT, CL B
GEOFAB=288 SY, TONS=129
–Y8– STA. 10+45 TO STA. 12+30 LT, CL B
GEOFAB=665 SY, TONS=299
–DR10– STA. 11+25 TO STA. 12+00 RT, CL B
GEOFAB=270 SY, TONS=121
–DR10– STA. 11+00 TO STA. 11+95 LT, CL B
GEOFAB=360 SY, TONS=162
–DR11– STA. 11+13 TO STA. 11+63 RT, CL B
GEOFAB=180 SY, TONS=81
–DR16– STA. 10+80 TO STA. 12+00 RT, CL B
GEOFAB=431 SY, TONS=194
–DR18– STA. 10+80 TO STA. 11+40 RT, CL B
GEOFAB=431 SY, TONS=194
–DR19– STA. 10+25 TO STA. 10+75 LT, CL B
GEOFAB=180 SY, TONS=81
–L_DET1– STA. 19+93 TO STA. 24+35 LT, CL B
GEOFAB=1589 SY, TONS=715
–L_DET1– STA. 29+44 TO STA. 31+79 LT, CL B
GEOFAB=845 SY, TONS=380
–L_DET1– STA. 31+28 TO STA. 33+68 RT, CL B
GEOFAB=863 SY, TONS=388
–L_DET2– STA. 14+20 TO STA. 15+20 LT, CL B
GEOFAB=360 SY, TONS=162
–L_DET4– STA. 13+81 TO STA. 18+45 RT, CL B
GEOFAB=1668 SY, TONS=751
–L_DET4– STA. 39+82 TO STA. 40+80 LT, CL B
GEOFAB=352 SY, TONS=159
–DET_DR1– STA. 10+15 TO STA. 11+60 LT, CL B
GEOFAB=352 SY, TONS=159

DETAIL F
CHANNEL CHANGE
(Not to Scale)

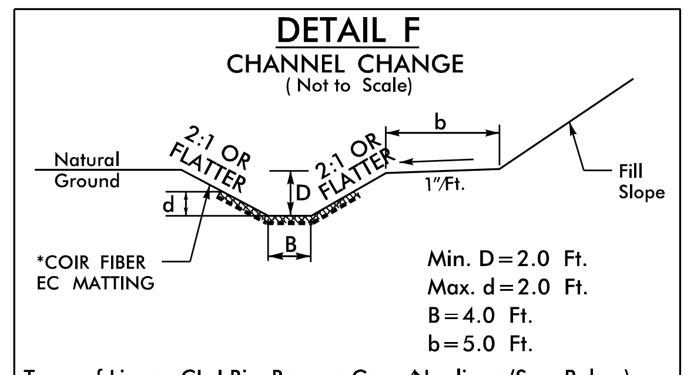
Natural Ground
2:1 OR FLATTER
D
2:1 OR FLATTER
d
B
b
1"/Ft.
Fill Slope
*COIR FIBER EC MATTING

Min. D=2.0 Ft.
Max. d=2.0 Ft.
B=4.0 Ft.
b=5.0 Ft.
Type of Liner=CL I Rip–Rap or Grass/No liner (See Below)

*Coir Fiber EC Matting to be used on slope above riprap. The riprap required in the channel bottoms needs to be embedded into soil without liner and top–dressed with native materials to seal gaps

–L– STA. 13+13 TO STA. 14+00 LT
NO LINER=GRASS, DDE=52 CY
–L– STA. 14+00 TO STA. 15+25 LT
LINER= CLASS I RIPRAP
DDE=74 CY, COIRFAB=180, TONS=81
–L– STA. 15+25 TO STA. 16+00 LT
NO LINER=GRASS, DDE=44 CY
–L– STA. 16+00 TO STA. 17+50 LT
LINER= CLASS I RIPRAP
DDE=89 CY, COIRFAB=216, TONS=97
–L_DET1– STA. 10+64 TO STA. 15+93 LT
LINER=CL I RIPRAP
DDE=1762 CY, COIRFAB=757, TONS=341

DETAIL G
LATERAL BASE DITCH
(Not to Scale)

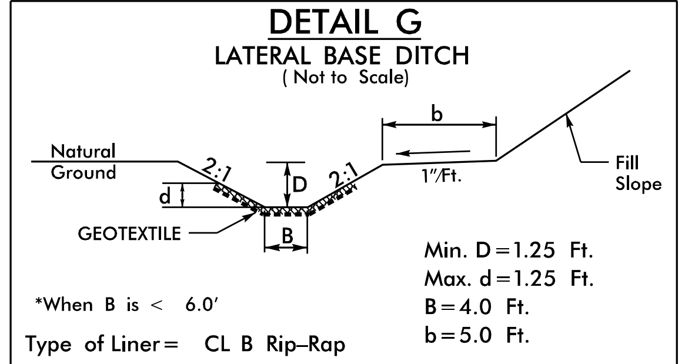
Natural Ground
2:1
D
2:1
d
B
b
1"/Ft.
GEOTEXTILE
Fill Slope

*When B is < 6.0'
Min. D=1.25 Ft.
Max. d=1.25 Ft.
B=4.0 Ft.
b=5.0 Ft.
Type of Liner= CL B Rip–Rap

–L– STA. 13+56 TO STA. 17+50 RT
DDE=1740 CY, GEOFAB=420 SY, TONS=189
–L– STA. 125+00 TO STA. 127+77 LT
DDE=431 CY, GEOFAB=295 SY, TONS=133
–L– STA. 134+11 TO STA. 136+50 RT
DDE=185 CY, GEOFAB=255 SY, TONS=115
–Y9– STA. 11+50 TO STA. 13+00 LT
DDE=23 CY, GEOFAB=160, TONS=72
–L_DET6– STA. 25+81 TO STA. 26+35 LT,
DDE=33 CY, GEOFAB=82 SY, TONS=37

DETAIL I
BERM 'V' DITCH
(Not to Scale)

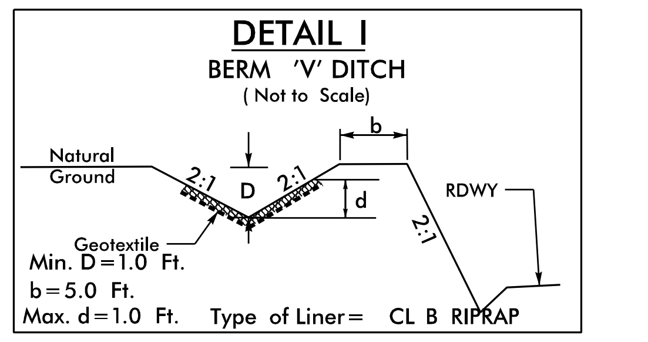
Natural Ground
2:1
D
2:1
d
b
RDWY
2:1
Geotextile

Min. D=1.0 Ft.
b=5.0 Ft.
Max. d=1.0 Ft. Type of Liner= CL B RIPRAP

–L– STA. 20+70 TO STA. 23+75 RT
GEOFAB=152 SY, TONS=68
–L– STA. 42+50 TO STA. 47+08 RT
GEOFAB=228 SY, TONS=102
–L– STA. 185+50 TO STA. 189+50 RT
GEOFAB=199 SY, TONS=89
–DR29– STA. 10+25 TO STA. 10+42 LT
GEOFAB=100 SY, TONS=36

DETAIL J
LATERAL BASE DITCH
(Not to Scale)

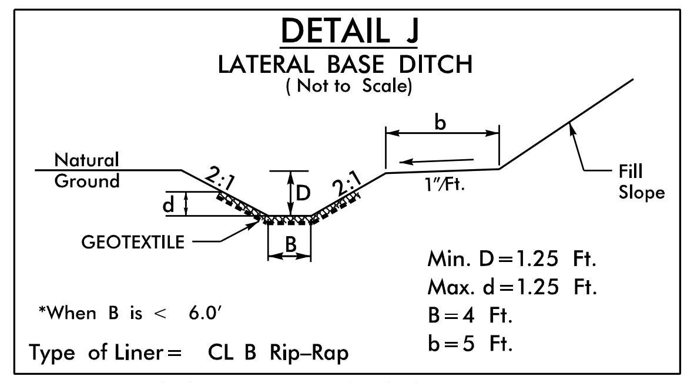
Natural Ground
2:1
D
2:1
d
B
b
1"/Ft.
GEOTEXTILE
Fill Slope

*When B is < 6.0'
Min. D=1.25 Ft.
Max. d=1.25 Ft.
B=4 Ft.
b=5 Ft.
Type of Liner= CL B Rip–Rap

–L– STA. 192+50 TO STA. 194+20 RT
DDE=350 CY, GEOFAB=181 SY, TONS=82
–DR19– STA. 10+75 TO STA. 11+13 LT
DDE=23 CY, GEOFAB=40 SY, TONS=18

DETAIL O
SPECIAL CUT DITCH
(Not to Scale)

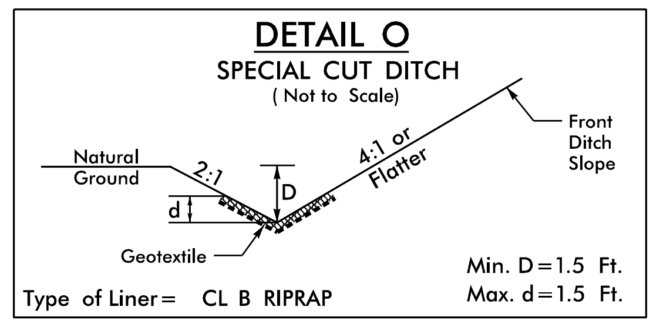
Natural Ground
2:1
D
d
4:1 or Flatter
Front Ditch Slope
Geotextile

Min. D=1.5 Ft.
Max. d=1.5 Ft.
Type of Liner= CL B RIPRAP

–L– STA. 66+91 TO STA. 68+00 LT
GEOFAB=115 SY, TONS=52
–L– STA. 162+50 TO STA. 162+89 RT
GEOFAB=41 SY, TONS=18
–Y1– STA. 10+00 TO STA. 10+50 RT
GEOFAB=53 SY, TONS=24
–Y1– STA. 10+00 TO STA. 11+50 LT
GEOFAB=158 SY, TONS=71
–Y2– STA. 13+50 TO STA. 15+00 LT
GEOFAB=158 SY, TONS=71
–Y2– STA. 14+00 TO STA. 15+00 RT
GEOFAB=105 SY, TONS=47
–Y3– STA. 10+75 TO STA. 12+00 RT
GEOFAB=132 SY, TONS=59
–Y6– STA. 11+00 TO STA. 12+50 LT
GEOFAB=158 SY, TONS=71
–Y11– STA. 12+00 TO STA. 13+00 LT
GEOFAB=179 SY, TONS=81
–Y11A– STA. 10+15 TO STA. 11+50 RT
GEOFAB=142 SY, TONS=64
–Y13– STA. 10+15 TO STA. 12+84 LT
GEOFAB=284 SY, TONS=128
–DR15– STA. 10+29 TO STA. 12+50 RT
GEOFAB=233 SY, TONS=105
–DR15– STA. 12+88 TO STA. 13+50 RT
GEOFAB=65 SY, TONS=29
–DR25– STA. 12+00 TO STA. 12+23 RT
GEOFAB=24 SY, TONS=11
–L_DET4– STA. 18+44 TO STA. 19+46 LT
GEOFAB=108 SY, TONS=48
–L_DET6– STA. 21+49 TO STA. 22+03 RT
GEOFAB=57 SY, TONS=26
–L_DET6– STA. 21+49 TO STA. 22+03 LT
GEOFAB=57 SY, TONS=26

DETAIL K
BERM 'V' DITCH
(Not to Scale)

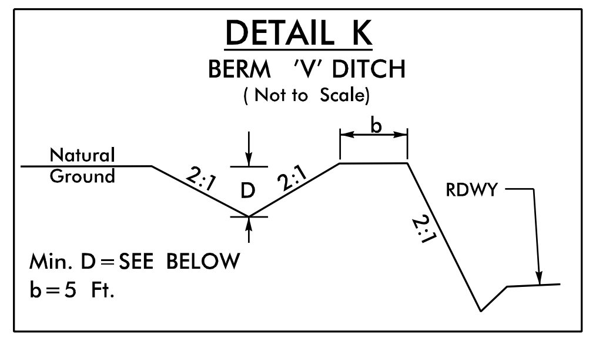
Natural Ground
2:1
D
2:1
b
RDWY
2:1

Min. D=SEE BELOW
b=5 Ft.

–L– STA. 112+00 TO STA. 112+97 RT, D=1.5'

DETAIL L
SPECIAL LATERAL BASE DITCH
(Not to Scale)

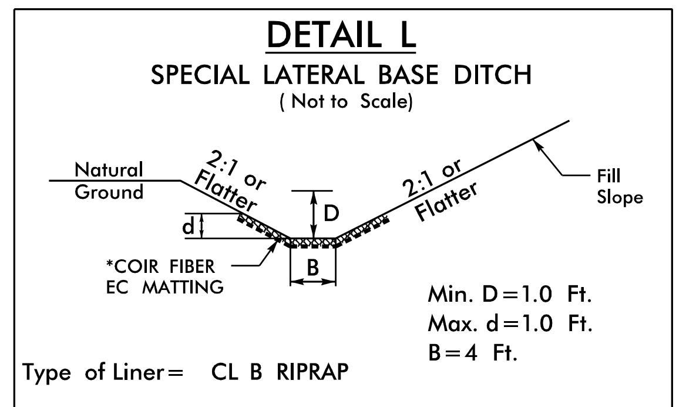
Natural Ground
2:1 or Flatter
D
d
B
2:1 or Flatter
Fill Slope
*COIR FIBER EC MATTING

Min. D=1.0 Ft.
Max. d=1.0 Ft.
B=4 Ft.
Type of Liner= CL B RIPRAP

*Coir Fiber EC Matting to be used on slope above riprap. The riprap required in the channel bottoms needs to be embedded into soil without liner and top–dressed with native materials to seal gaps

–L– STA. 111+00 TO STA. 114+12 LT
COIRFAB=294 SY, TONS=132
–DR2– STA. 10+00 TO STA. 11+36 LT
COIRFAB=141 SY, TONS=64

DETAIL M
BERM BASE DITCH
(Not to Scale)

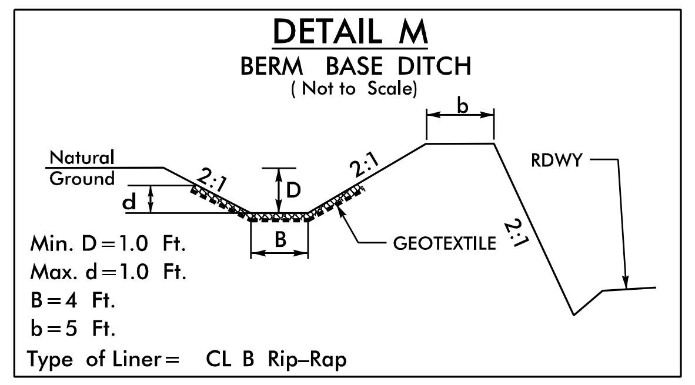
Natural Ground
2:1
D
d
B
2:1
b
GEOTEXTILE
RDWY
2:1

Min. D=1.0 Ft.
Max. d=1.0 Ft.
B=4 Ft.
b=5 Ft.
Type of Liner= CL B Rip–Rap

–Y6– STA. 14+50 TO STA. 15+65 LT
GEOFAB=208 SY, TONS=94
–L– STA. 40+60 TO STA. 42+50 RT
GEOFAB=179 SY, TONS=80
–L– STA. 77+50 TO STA. 79+00 RT
GEOFAB=141 SY, TONS=64
–L– STA. 85+50 TO STA. 91+30 LT
GEOFAB=546 SY, TONS=246

–L_DET2– STA. 15+18 TO STA. 21+70 LT
GEOFAB=614 SY, TONS=276

DETAIL N
SPECIAL LATERAL 'V' DITCH
(Not to Scale)

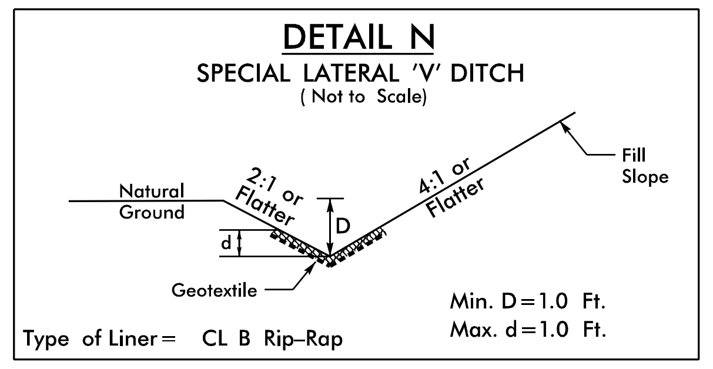
Natural Ground
2:1 or Flatter
D
d
4:1 or Flatter
Fill Slope
Geotextile

Min. D=1.0 Ft.
Max. d=1.0 Ft.
Type of Liner= CL B Rip–Rap

–Y4– STA. 13+00 TO STA. 14+10 LT
GEOFAB=77 SY, TONS=35
–DR2– STA. 11+36 TO STA. 12+00 LT
GEOFAB=45 SY, TONS=20

DETAIL P
LATERAL BASE DITCH
(Not to Scale)

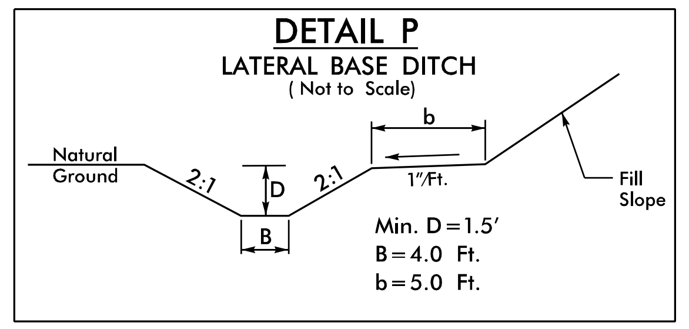
Natural Ground
2:1
D
B
2:1
b
1"/Ft.
Fill Slope

Min. D=1.5'
B=4.0 Ft.
b=5.0 Ft.

–L– STA. 32+50 TO STA. 32+79 RT, DDE=106 CY
–L– STA. 33+15 TO STA. 34+35 RT, DDE=649 CY

DETAIL Q
BERM BASE DITCH
(Not to Scale)

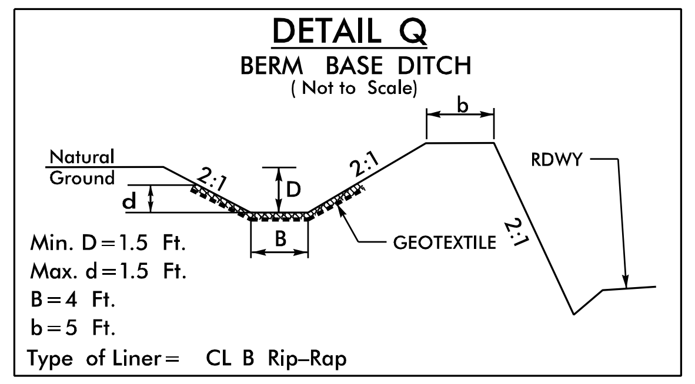
Natural Ground
2:1
D
d
B
2:1
b
GEOTEXTILE
RDWY
2:1

Min. D=1.5 Ft.
Max. d=1.5 Ft.
B=4 Ft.
b=5 Ft.
Type of Liner= CL B Rip–Rap

–L– STA. 39+60 TO STA. 40+60 RT
GEOFAB=119 SY, TONS=54

DETAIL R
STANDARD BASE DITCH
(Not to Scale)

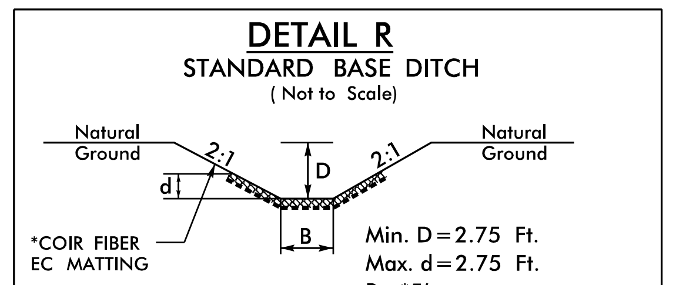
Natural Ground
2:1
D
d
B
2:1
Natural Ground
*COIR FIBER EC MATTING

Min. D=2.75 Ft.
Max. d=2.75 Ft.
B=*5'
Type of Liner= CL I RIPRAP

*Coir Fiber EC Matting to be used on slope above riprap. The riprap required in the channel bottoms needs to be embedded into soil without liner and top–dressed with native materials to seal gaps

–L– STA. 50+78 LT, L=78', S=2.7%
BEG. EL=1663.71', END EL=1661.80'
DDE=150 CY, COIRFAB=150 SY, TONS=71
–L– STA. 53+25 RT, L=92', S=2.0%
BEG. EL=1645.00', END EL=1643.13'
DDE=454 CY, COIRFAB=231 SY, TONS=109
–L– STA. 81+64 LT, L=72', S=8.5%
BEG. EL=1629.00, END EL=1622.88'
DDE=792 CY, COIRFAB=138 SY, TONS=65
–L– 148+19 RT, L=30', S=8.7%, B=*4'
BEG. EL=1665.5', END EL=1662.9'
DDE=37 CY, COIRFAB=58 SY, TONS=26
–L– STA. 182+62 LT, L=34', S=4.4%
BEG. EL=1642.7, END EL=1641.2'
DDE=315 CY, COIRFAB=65 SY, TONS=29

DETAIL S
10' WIDE BERM
(Not to Scale)

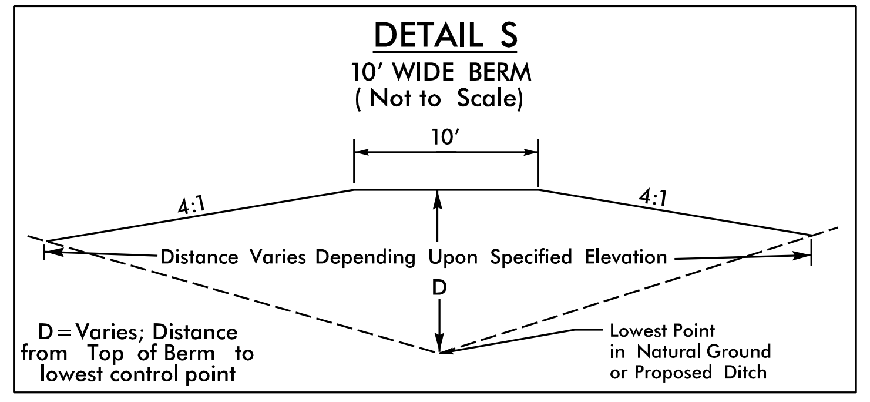
10'
4:1
4:1
Distance Varies Depending Upon Specified Elevation
D
D=Varies; Distance from Top of Berm to lowest control point
Lowest Point in Natural Ground or Proposed Ditch

–L– STA. 52+50 LT, TOP ELEV=1667.5'
–L– STA. 92+75 LT, TOP ELEV=1703.57'

DETAIL T
STANDARD 'V' DITCH
(Not to Scale)

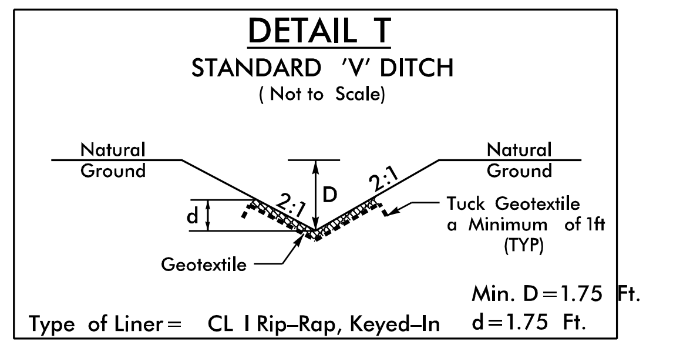
Natural Ground
2:1
D
d
2:1
Natural Ground
Tuck Geotextile a Minimum of 1ft (TYP)
Geotextile

Min. D=1.75 Ft.
d=1.75 Ft.
Type of Liner= CL I Rip–Rap, Keyed–In

–L– STA. 93+79 RT, L=16', S=12.1%
BEG. EL=1694.0, END EL=1692.06'
DDE=36CY, GEOFAB=30 SY, TONS=15
–L– STA. 120+25 LT, L=16', S=13.8%
BEG. EL=1662.0', END EL=1659.8'
DDE=26CY, GEOFAB=25 SY, TONS=12

DETAIL U
CHANNEL CHANGE
(Not to Scale)

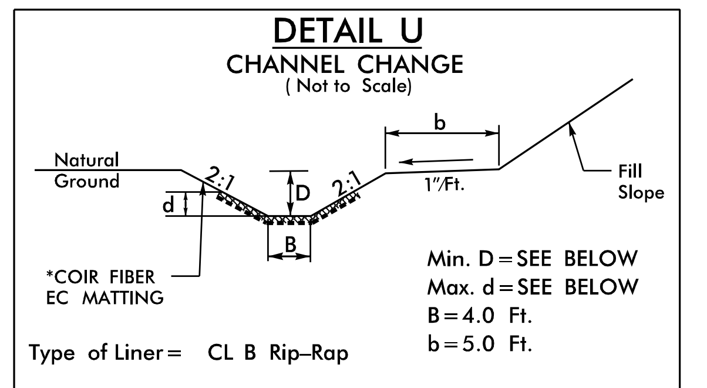
Natural Ground
2:1
D
d
B
2:1
b
1"/Ft.
Fill Slope
*COIR FIBER EC MATTING

Min. D=SEE BELOW
Max. d=SEE BELOW
B=4.0 Ft.
b=5.0 Ft.
Type of Liner= CL B Rip–Rap

*Coir Fiber EC Matting to be used on slope above riprap. The riprap required in the channel bottoms needs to be embedded into soil without liner and top–dressed with native materials to seal gaps

–L– STA. 32+79 TO STA. 33+15 RT, D=2.0'
DDE=191 CY, COIRFAB=52 SY, TONS=23
–L– STA. 83+80 TO STA. 84+59 RT, D=2.5'
DDE=172 CY, COIRFAB=255 SY, TONS=115

DETAIL W
LATERAL 'V' DITCH
(Not to Scale)

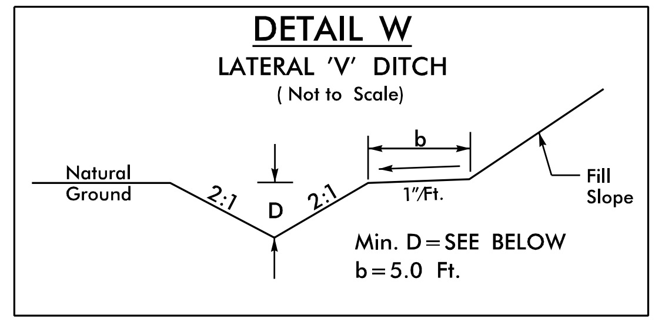
Natural Ground
2:1
D
2:1
b
1"/Ft.
Fill Slope

Min. D=SEE BELOW
b=5.0 Ft.

–L– STA. 68+00 TO STA. 71+12 RT, MIN D=2.0', DDE=643 CY
–L– STA. 71+09 TO STA. 72+39 RT, MIN D=2.25', DDE=212 CY
–L– STA. 72+39 TO STA. 73+50 RT, MIN D=1.75', DDE=109 CY
–L– STA. 195+50 TO STA. 197+00 RT, MIN D=1.0', DDE=77 CY

DETAIL X
SPECIAL CUT BASE DITCH
(Not to Scale)

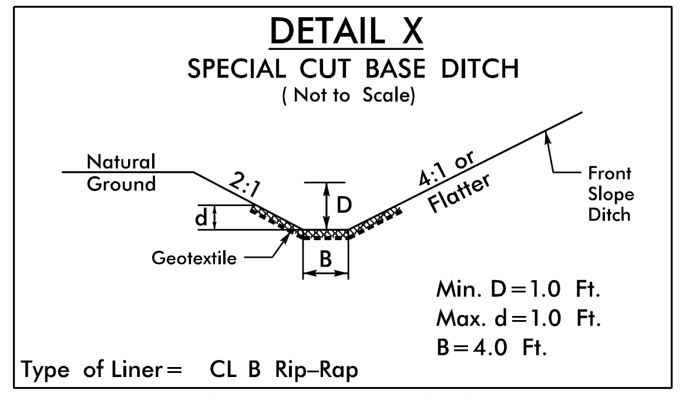
Natural Ground
2:1
D
d
B
4:1 or Flatter
Front Slope Ditch
Geotextile

Min. D=1.0 Ft.
Max. d=1.0 Ft.
B=4.0 Ft.
Type of Liner= CL B Rip–Rap

–Y1– STA. 12+50 TO STA. 16+33 LT
GEOFAB=402 SY, TONS=181
–L_DET2– STA. 23+71 TO STA. 24+20 LT
GEOFAB=56 SY, TONS=25
–L_DET6– STA. 23+12 TO STA. 25+81 LT
GEOFAB=309 SY, TONS=139

DETAIL Y
SPECIAL LATERAL BASE DITCH
(Not to Scale)

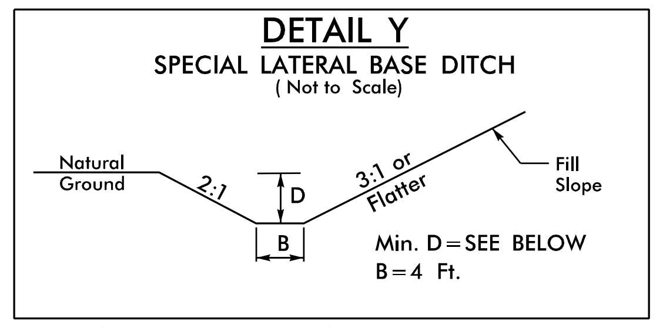
Natural Ground
2:1
D
B
3:1 or Flatter
Fill Slope

Min. D=SEE BELOW
B=4 Ft.

–L– STA. 179+50 TO STA. 181+00 RT, D=1.75'
–L– STA. 198+50 TO STA. 199+00 LT, D=2.5'
–L– STA. 199+00 TO STA. 199+25 LT, D=1.75'

DETAIL Z
SPECIAL CUT BASE DITCH
(Not to Scale)

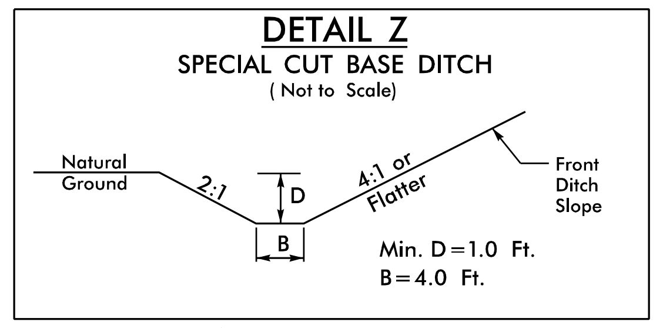
Natural Ground
2:1
D
B
4:1 or Flatter
Front Ditch Slope

Min. D=1.0 Ft.
B=4.0 Ft.

–L– STA. 136+50 TO STA. 137+00 RT

DETAIL AF
ROCK FILL IN POND
(Not to Scale)

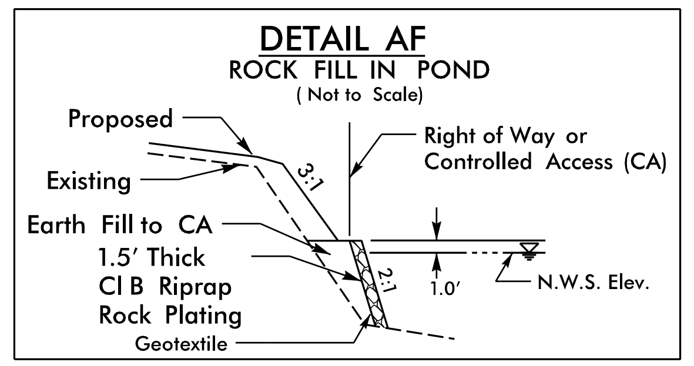
Proposed
Existing
Earth Fill to CA
1.5' Thick
Cl B Riprap
Rock Plating
Geotextile
3:1
2:1
Right of Way or Controlled Access (CA)
1.0'
N.W.S. Elev.

–L– STA. 102+07 RT

RK&K
P: (919) 878-9560
8601 Six Forks Road, Forum 1,Suite 700
Raleigh, North Carolina 27615-3960
NC License No. F-0112
Engineers | Construction Managers | Planners | Scientists
www.rkk.com
Responsive People | Creative Solutions

8/17/99

$$$$$$ SYSTIME$$$$$$
R:\Hydraulics\CADD\R5861_Hyd_Ditch_Detail.dgn
bespinosa

PROJECT REFERENCE NO.	SHEET NO.
R-5861	2D-2

R/W SHEET NO.

ROADWAY DESIGN ENGINEER	HYDRAULICS ENGINEER
DocuSigned by: Brandon J. McInnis BE6912CC24204D4... SEAL 29470 BRANDON J. McINNIS 10/31/2023	DocuSigned by: Alexis Burke 08E52EF5827E423... SEAL 46155 ALEXIS S. BURKE 10/31/2023

DOCUMENT NOT CONSIDERED FINAL UNLESS ALL SIGNATURES COMPLETED

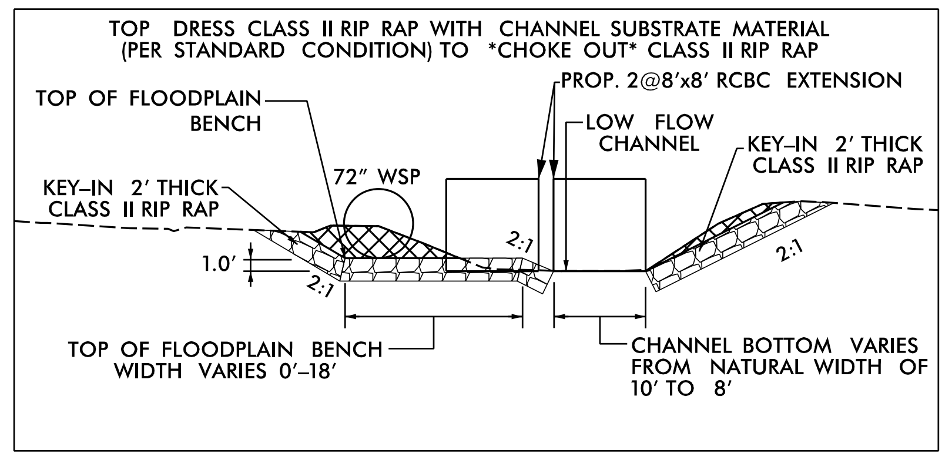
TOP DRESS CLASS II RIP RAP WITH CHANNEL SUBSTRATE MATERIAL (PER STANDARD CONDITION) TO *CHOKE OUT* CLASS II RIP RAP
PROP. 2@8'x8' RCBC EXTENSION
TOP OF FLOODPLAIN BENCH
LOW FLOW CHANNEL
KEY-IN 2' THICK CLASS II RIP RAP
72" WSP
KEY-IN 2' THICK CLASS II RIP RAP
1.0'
2:1
2:1
2:1
TOP OF FLOODPLAIN BENCH WIDTH VARIES 0'-18'
CHANNEL BOTTOM VARIES FROM NATURAL WIDTH OF 10' TO 8'

*NOTE: SUPPLEMENTAL RIPRAP SHALL BE USED AS NEEDED IN THE LOW FLOW CHANNEL ALONG WITH THE NATIVE MATERIAL TO ENSURE COMPLETE BACKFILLING
*SEE STRUCTURES PAY ITEMS

-L- STA. 71+92, COBB CREEK INLET IMPROVEMENTS

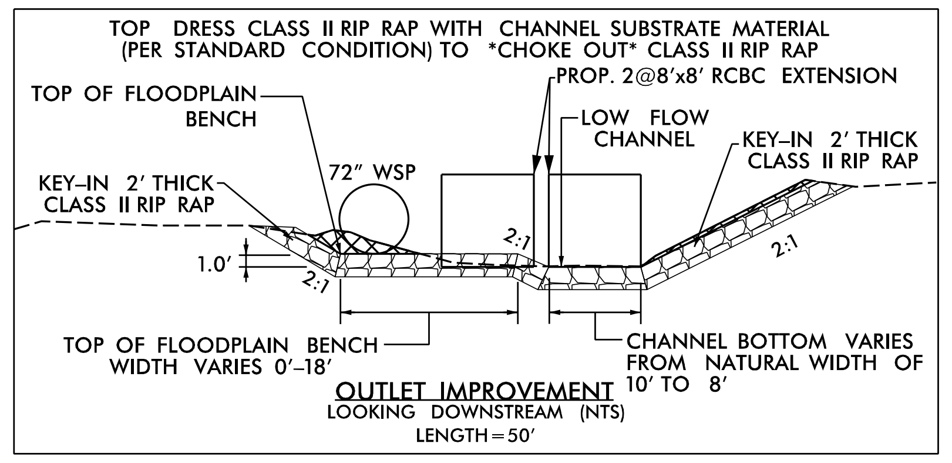
TOP DRESS CLASS II RIP RAP WITH CHANNEL SUBSTRATE MATERIAL (PER STANDARD CONDITION) TO *CHOKE OUT* CLASS II RIP RAP
PROP. 2@8'x8' RCBC EXTENSION
TOP OF FLOODPLAIN BENCH
LOW FLOW CHANNEL
KEY-IN 2' THICK CLASS II RIP RAP
72" WSP
KEY-IN 2' THICK CLASS II RIP RAP
1.0'
2:1
2:1
2:1
TOP OF FLOODPLAIN BENCH WIDTH VARIES 0'-18'
CHANNEL BOTTOM VARIES FROM NATURAL WIDTH OF 10' TO 8'
OUTLET IMPROVEMENT
LOOKING DOWNSTREAM (NTS)
LENGTH=50'

*NOTE: SUPPLEMENTAL RIPRAP SHALL BE USED AS NEEDED IN THE LOW FLOW CHANNEL ALONG WITH THE NATIVE MATERIAL TO ENSURE COMPLETE BACKFILLING
*SEE STRUCTURES PAY ITEMS

-L- STA. 71+92, COBB CREEK OUTLET IMPROVEMENTS

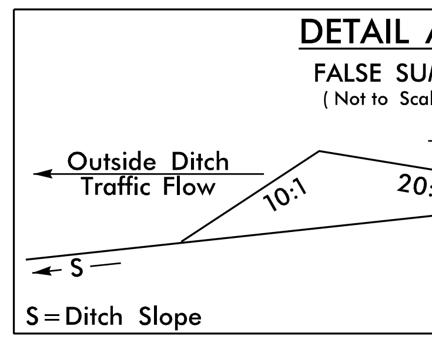
DETAIL AB
FALSE SUMP
(Not to Scale)
0.5' Min.
1.0' Max
Outside Ditch
Traffic Flow
10:1
20:1
2.0'
GI etc.
S
S=Ditch Slope
℄ Proposed Ditch

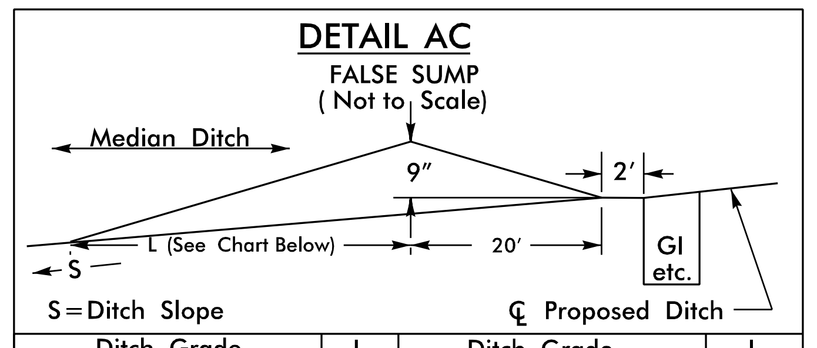
DETAIL AC
FALSE SUMP
(Not to Scale)
Median Ditch
9"
2'
L (See Chart Below)
20'
GI etc.
S
S=Ditch Slope
℄ Proposed Ditch

Ditch Grade	L	Ditch Grade	L
0.0% To 2.0%	20'	Over 4.0% To 6.0%	40'
Over 2.0% To 4.0%	30'	Over 6.0%	50'

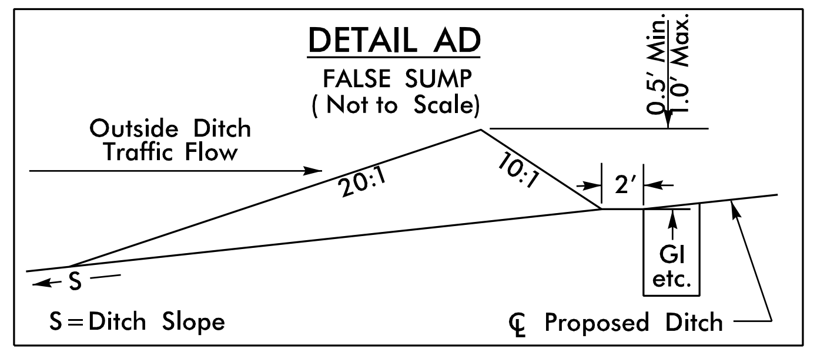
DETAIL AD
FALSE SUMP
(Not to Scale)
0.5' Min.
1.0' Max.
Outside Ditch
Traffic Flow
20:1
10:1
2'
GI etc.
S
S=Ditch Slope
℄ Proposed Ditch

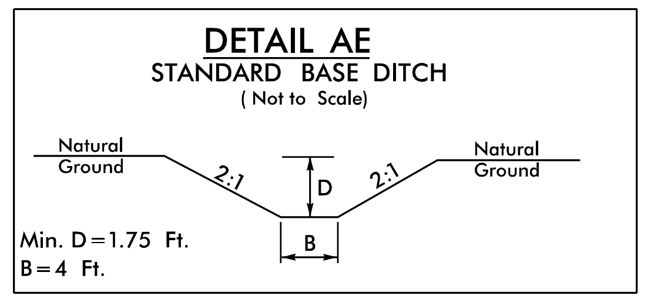
DETAIL AE
STANDARD BASE DITCH
(Not to Scale)
Natural Ground
Natural Ground
2:1
2:1
D
B
Min. D=1.75 Ft.
B=4 Ft.

-L_DET6- STA. 26+35 LT, B=4', L=54', S=1.2%
BEG. ELEV=1610.32, END ELEV=1609.70
DDE=32 CY

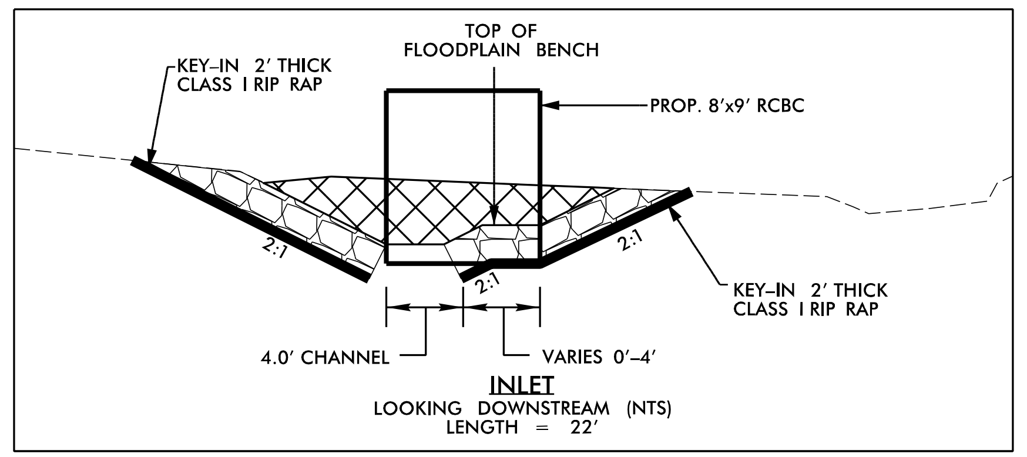
TOP OF FLOODPLAIN BENCH
KEY-IN 2' THICK CLASS I RIP RAP
PROP. 8'x9' RCBC
2:1
2:1
2:1
KEY-IN 2' THICK CLASS I RIP RAP
4.0' CHANNEL
VARIES 0'-4'
INLET
LOOKING DOWNSTREAM (NTS)
LENGTH = 22'

*NOTE: SUPPLEMENTAL RIPRAP SHALL BE USED AS NEEDED IN THE LOW FLOW CHANNEL ALONG WITH THE NATIVE MATERIAL TO ENSURE COMPLETE BACKFILLING
*SEE STRUCTURES PAY ITEMS

-L- STA. 127+65, GOLD BRANCH INLET IMPROVEMENTS

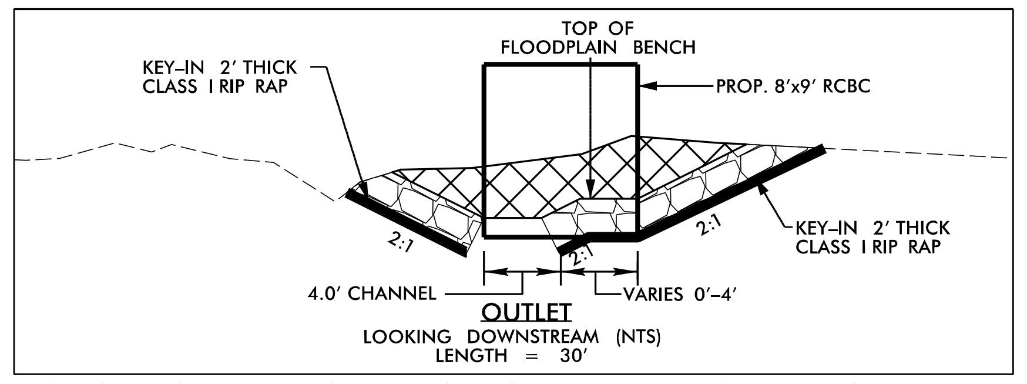
TOP OF FLOODPLAIN BENCH
KEY-IN 2' THICK CLASS I RIP RAP
PROP. 8'x9' RCBC
2:1
2:1
2:1
KEY-IN 2' THICK CLASS I RIP RAP
4.0' CHANNEL
VARIES 0'-4'
OUTLET
LOOKING DOWNSTREAM (NTS)
LENGTH = 30'

*NOTE: SUPPLEMENTAL RIPRAP SHALL BE USED AS NEEDED IN THE LOW FLOW CHANNEL ALONG WITH THE NATIVE MATERIAL TO ENSURE COMPLETE BACKFILLING
*SEE STRUCTURES PAY ITEMS

-L- STA. 127+65, GOLD BRANCH OUTLET IMPROVEMENTS

NOT TO SCALE

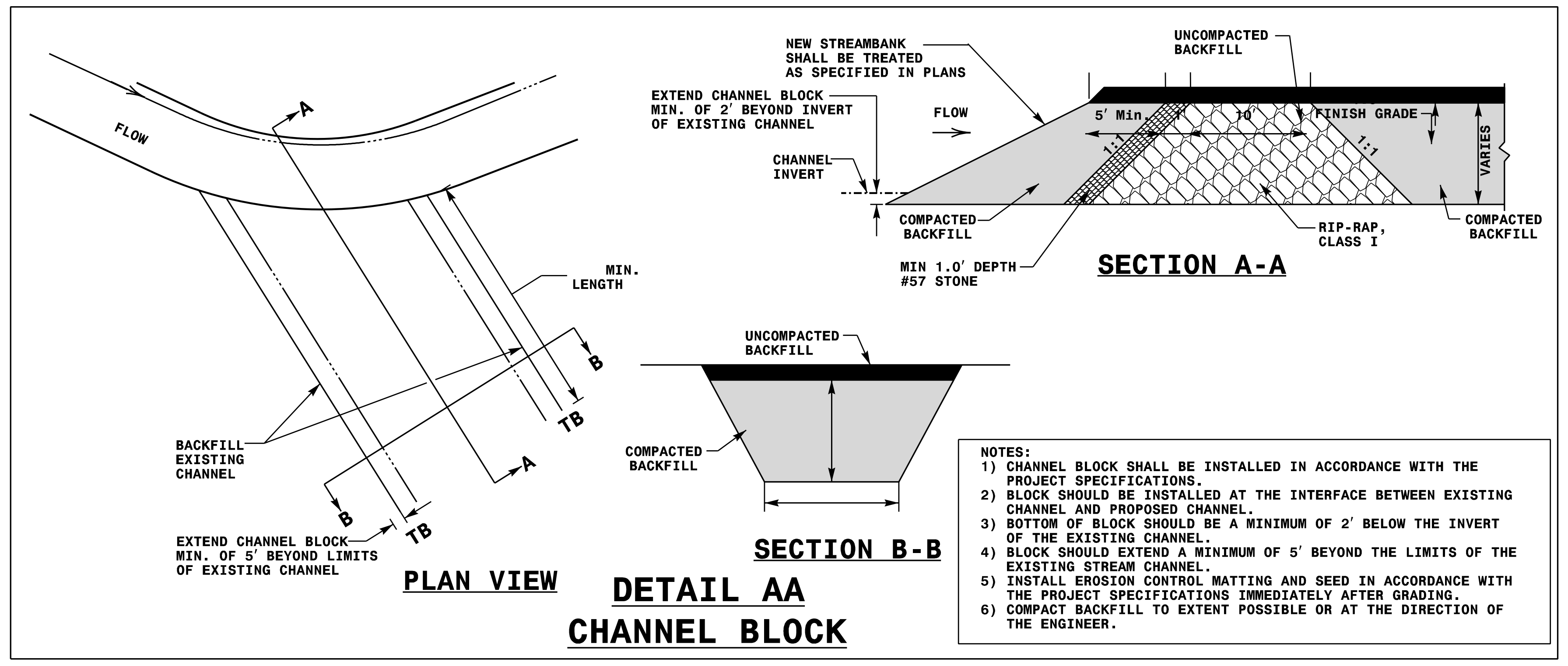
FLOW
A
A
B
B
TB
TB
MIN. LENGTH
BACKFILL EXISTING CHANNEL
EXTEND CHANNEL BLOCK MIN. OF 5' BEYOND LIMITS OF EXISTING CHANNEL
PLAN VIEW
NEW STREAMBANK SHALL BE TREATED AS SPECIFIED IN PLANS
EXTEND CHANNEL BLOCK MIN. OF 2' BEYOND INVERT OF EXISTING CHANNEL
CHANNEL INVERT
FLOW
UNCOMPACTED BACKFILL
5' Min.
1'
10'
FINISH GRADE
1:1
1:1
VARIES
COMPACTED BACKFILL
RIP-RAP, CLASS I
COMPACTED BACKFILL
MIN 1.0' DEPTH #57 STONE
SECTION A-A
UNCOMPACTED BACKFILL
COMPACTED BACKFILL
SECTION B-B

NOTES:
1) CHANNEL BLOCK SHALL BE INSTALLED IN ACCORDANCE WITH THE PROJECT SPECIFICATIONS.
2) BLOCK SHOULD BE INSTALLED AT THE INTERFACE BETWEEN EXISTING CHANNEL AND PROPOSED CHANNEL.
3) BOTTOM OF BLOCK SHOULD BE A MINIMUM OF 2' BELOW THE INVERT OF THE EXISTING CHANNEL.
4) BLOCK SHOULD EXTEND A MINIMUM OF 5' BEYOND THE LIMITS OF THE EXISTING STREAM CHANNEL.
5) INSTALL EROSION CONTROL MATTING AND SEED IN ACCORDANCE WITH THE PROJECT SPECIFICATIONS IMMEDIATELY AFTER GRADING.
6) COMPACT BACKFILL TO EXTENT POSSIBLE OR AT THE DIRECTION OF THE ENGINEER.

DETAIL AA
CHANNEL BLOCK

-L- STA. 12+85 LT, CL I TONS=31, #57 STONE TONS=3
-L- STA. 13+37 RT, CL I TONS=31, #57 STONE TONS=3
-DR1- 10+57 RT, CL I TONS=41, #57 STONE TONS=3
-L- STA. 51+40 LT, CL I TONS=49, #57 STONE TONS=4
-Y11- 11+57 RT, CL I TONS=13, #57 STONE TONS=1

ENERGY REDUCTION RIFFLE

STATION	ELEVATION
-L- STA. 145+85 RT	1659.60
-L- STA. 146+20 RT	1659.75
-L- STA. 146+58 RT	1659.91
-L- STA. 146+96 RT	1660.07
-L- STA. 147+32 RT	1660.22
-L- STA. 147+67 RT	1660.94
-L- STA. 148+03 RT	1662.90

(7) ENERGY REDUCTION RIFFLE QTY:

CL II TONS=105, COIRFAB=112 SY,
"CL B/I 50% MIX" TONS=70, GEOTEXTILE=140 SY

*NOTE PER RIFFLE: CL II TONS=15, COIRFAB=16 SY,
"CL B/I 50% MIX" TONS=10, GEOTEXTILE=20 SY

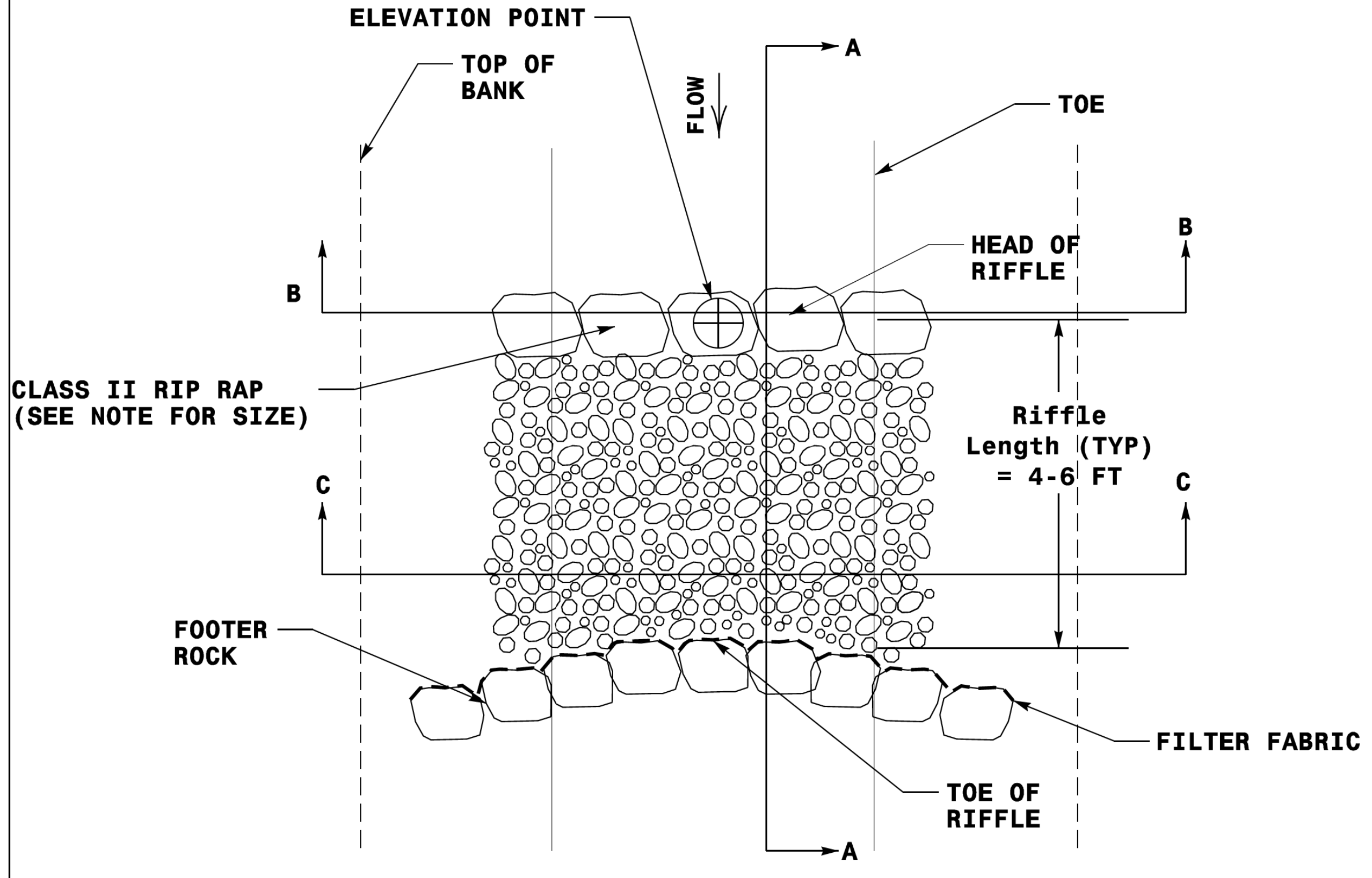
ELEVATION POINT
TOP OF BANK
FLOW
A
A
TOE
HEAD OF RIFFLE
B
B
CLASS II RIP RAP (SEE NOTE FOR SIZE)
Riffle Length (TYP) = 4-6 FT
C
C
FOOTER ROCK
FILTER FABRIC
TOE OF RIFFLE

PLAN VIEW

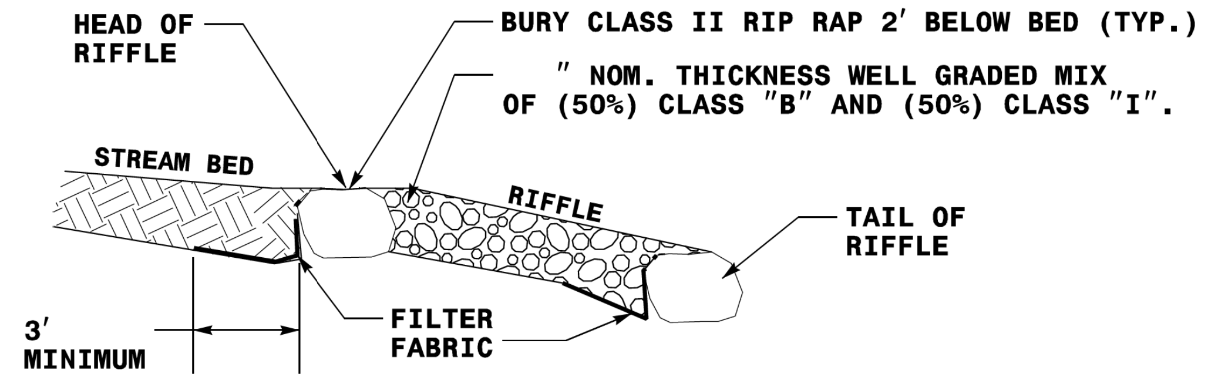
HEAD OF RIFFLE
BURY CLASS II RIP RAP 2' BELOW BED (TYP.)
" NOM. THICKNESS WELL GRADED MIX OF (50%) CLASS "B" AND (50%) CLASS "I".
STREAM BED
RIFFLE
TAIL OF RIFFLE
3' MINIMUM
FILTER FABRIC

SECTION A-A

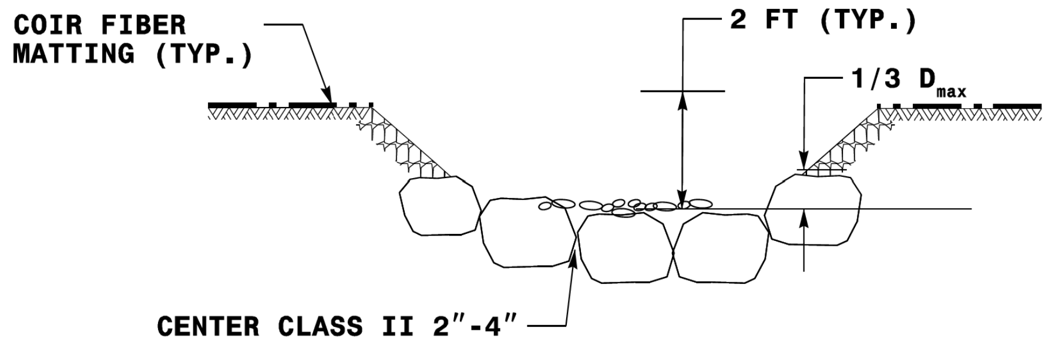
COIR FIBER MATTING (TYP.)
2 FT (TYP.)
1/3 Dmax
CENTER CLASS II 2"-4"

SECTION B-B

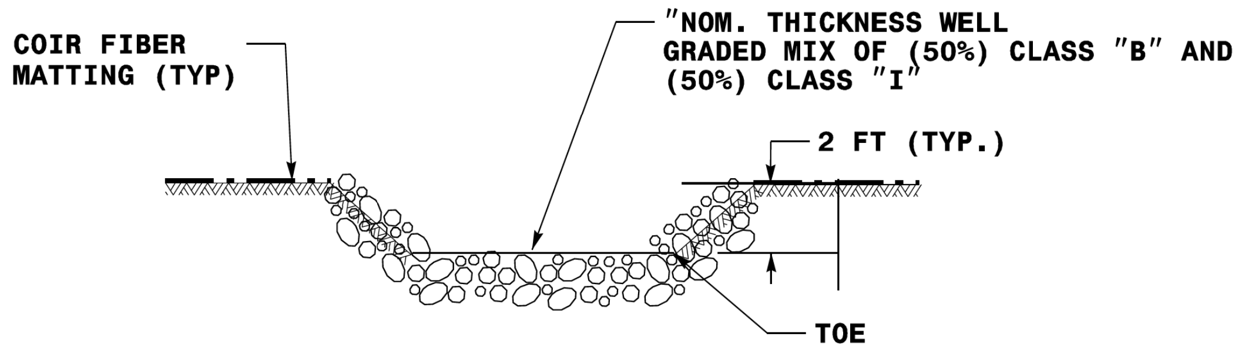
COIR FIBER MATTING (TYP)
"NOM. THICKNESS WELL GRADED MIX OF (50%) CLASS "B" AND (50%) CLASS "I"
2 FT (TYP.)
TOE

SECTION C-C

NOTE
CLASS II RIP RAP SHOULD BE NATIVE STONES OR SHOT ROCK, ANGULAR AND OBLONG, TYPICAL DIMENSION 2' DIAMETER
SEE TABLE FOR ELEVATION POINT DATA PER STRUCTURE ON PLANS
EACH STRUCTURE EMBEDDED IN ORDER TO NOT IMPEDE AQUATIC ORGANISM PASSAGE
OPTION FOR INCLUDING LIVE STAKES ON FLOODPLAIN BENCHES.

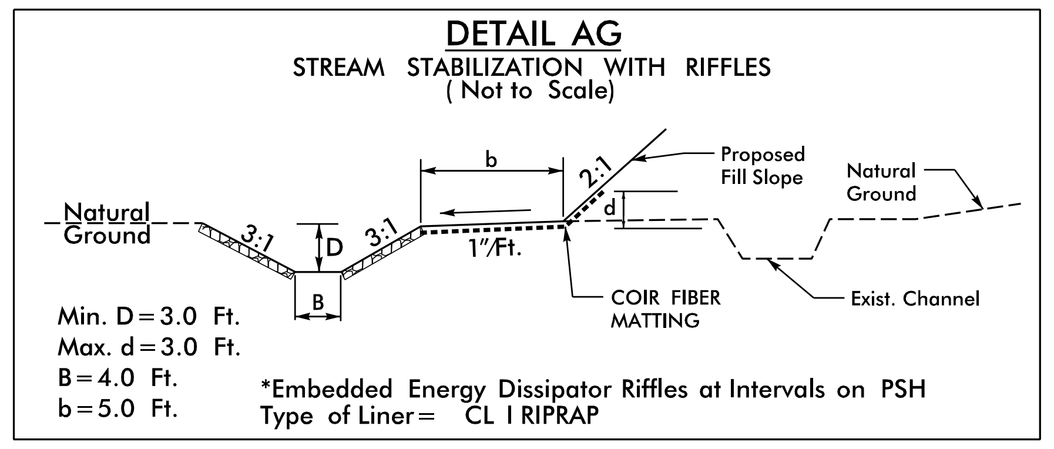
DETAIL AG
STREAM STABILIZATION WITH RIFFLES
(Not to Scale)
Natural Ground
3:1
D
3:1
B
b
2:1
1"/Ft.
d
Proposed Fill Slope
Natural Ground
COIR FIBER MATTING
Exist. Channel
Min. D=3.0 Ft.
Max. d=3.0 Ft.
B=4.0 Ft.
b=5.0 Ft.
*Embedded Energy Dissipator Riffles at Intervals on PSH
Type of Liner= CL I RIPRAP

-L- STA. 145+67 TO STA. 148+19 RT
DDE=802 CY, COIRFAB=658 SY, CL I TONS=234
*SEE RIFFLE DETAIL FOR MORE INFORMATION

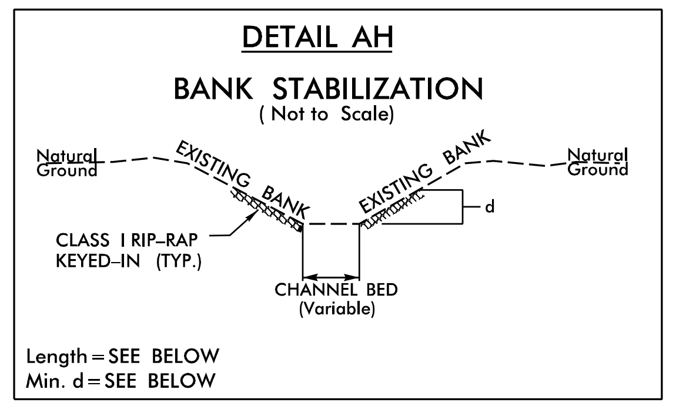
DETAIL AH
BANK STABILIZATION
(Not to Scale)
Natural Ground
EXISTING BANK
EXISTING BANK
Natural Ground
d
CLASS I RIP-RAP KEYED-IN (TYP.)
CHANNEL BED (Variable)
Length=SEE BELOW
Min. d=SEE BELOW

-L- STA. 58+74 RT, L=14', Min d=1.5'
20 TONS CL I RIPRAP
-L- STA. 145+62 LT, L=24', Min d=2.0'
57 TONS CL I RIPRAP
-L- STA. 145+73 RT, L=20', Min d=1.5'
40 TONS CL I RIPRAP
-Y11- STA. 11+68 RT, L=10', Min d=1.5'
11 TONS CL I RIPRAP

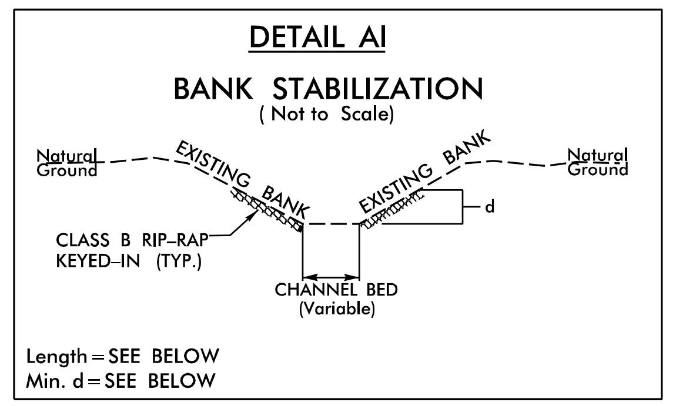
DETAIL AI
BANK STABILIZATION
(Not to Scale)
Natural Ground
EXISTING BANK
EXISTING BANK
Natural Ground
d
CLASS B RIP-RAP KEYED-IN (TYP.)
CHANNEL BED (Variable)
Length=SEE BELOW
Min. d=SEE BELOW

-L- STA. 95+88 RT, L=5', Min d=1.0'
2 TONS CL B RIPRAP
-L- STA. 114+12 LT, L=10', Min d=1.5'
8 TONS CL B RIPRAP
-Y8- STA. 10+91 RT, L=12', Min d=1.0'
11 TONS CL B RIPRAP

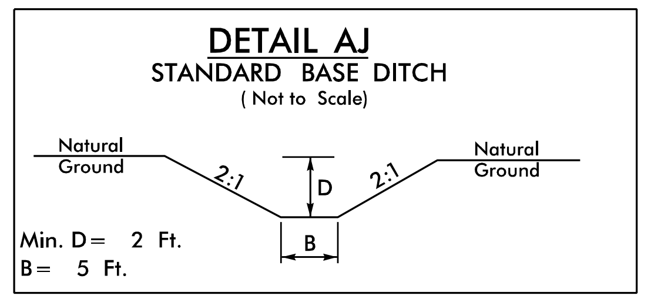
DETAIL AJ
STANDARD BASE DITCH
(Not to Scale)
Natural Ground
Natural Ground
2:1
2:1
D
B
Min. D= 2 Ft.
B= 5 Ft.

-L- STA. 80+95 LT, L=15', S=EXISTING STREAM SLOPE
DDE=29 CY

RK&K
P: (919) 878-9560
8601 Six Forks Road, Forum 1,Suite 700
Raleigh, North Carolina 27615-3960
NC License No. F-0112
Engineers | Construction Managers | Planners | Scientists
www.rkk.com
Responsive People | Creative Solutions

PROJECT REFERENCE NO.	SHEET NO.
R-5861	2G-1

GEOTECHNICAL ENGINEER

SEAL 041709 GREGORY K. GOINS

DocuSigned by:
Gregory Goins
A40B119A1E2B43C...
10/30/2023
SIGNATURE DATE

ENGINEER

SIGNATURE DATE

DOCUMENT NOT CONSIDERED FINAL UNLESS ALL SIGNATURES COMPLETED

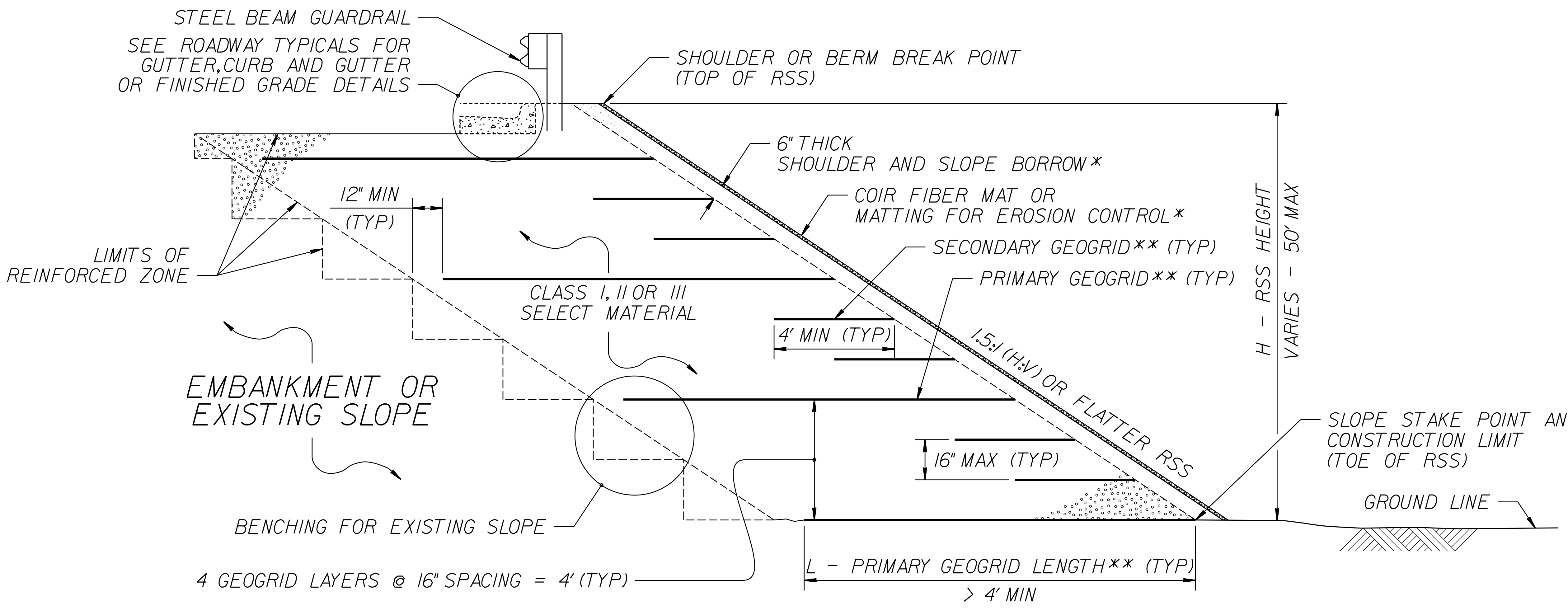

STEEL BEAM GUARDRAIL
SEE ROADWAY TYPICALS FOR GUTTER,CURB AND GUTTER OR FINISHED GRADE DETAILS
SHOULDER OR BERM BREAK POINT (TOP OF RSS)
6" THICK SHOULDER AND SLOPE BORROW*
COIR FIBER MAT OR MATTING FOR EROSION CONTROL*
SECONDARY GEOGRID** (TYP)
PRIMARY GEOGRID** (TYP)
12" MIN (TYP)
LIMITS OF REINFORCED ZONE
CLASS I, II OR III SELECT MATERIAL
4' MIN (TYP)
1.5:1 (H:V) OR FLATTER RSS
H - RSS HEIGHT VARIES - 50' MAX
EMBANKMENT OR EXISTING SLOPE
16" MAX (TYP)
SLOPE STAKE POINT AND CONSTRUCTION LIMIT (TOE OF RSS)
GROUND LINE
BENCHING FOR EXISTING SLOPE
4 GEOGRID LAYERS @ 16" SPACING = 4' (TYP)
L - PRIMARY GEOGRID LENGTH** (TYP)
> 4' MIN

MATTING WITH SHOULDER AND SLOPE BORROW

*SEE NOTES 3 AND 9 ON SHEET 2.

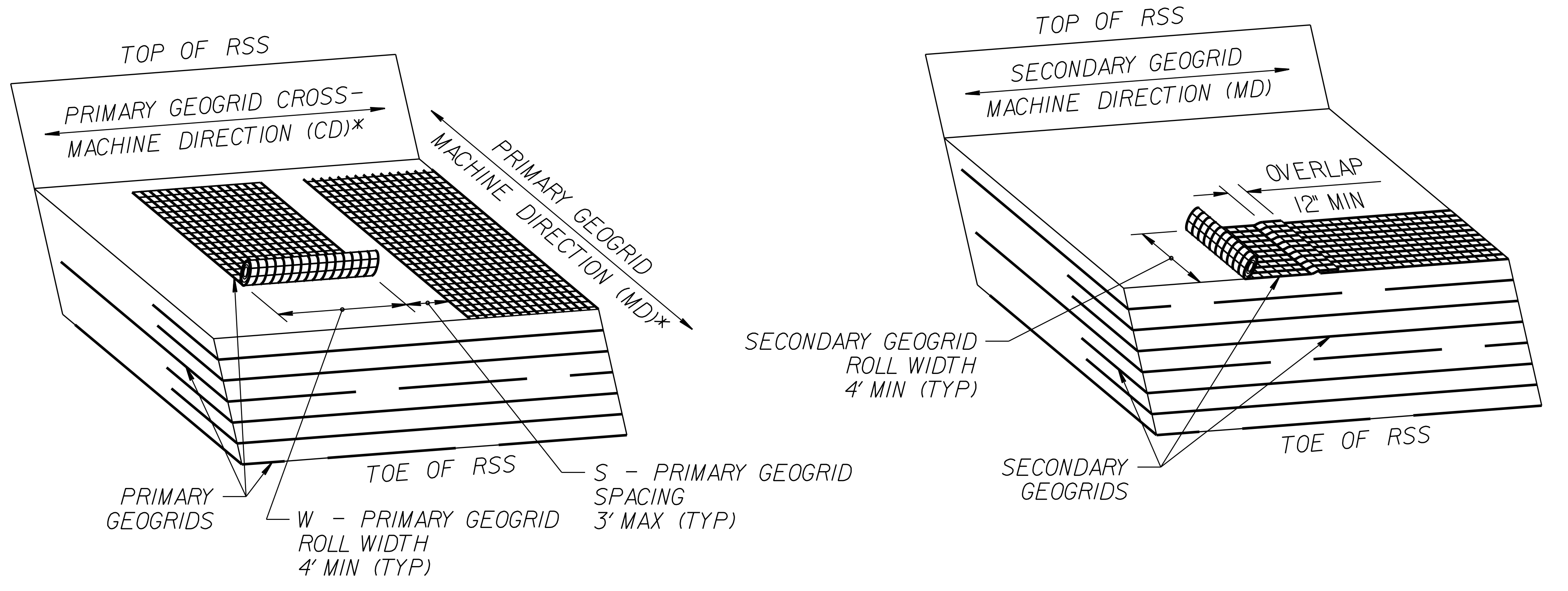

TOP OF RSS
PRIMARY GEOGRID CROSS-MACHINE DIRECTION (CD)*
PRIMARY GEOGRID MACHINE DIRECTION (MD)*
TOE OF RSS
PRIMARY GEOGRIDS
W - PRIMARY GEOGRID ROLL WIDTH 4' MIN (TYP)
S - PRIMARY GEOGRID SPACING 3' MAX (TYP)
TOP OF RSS
SECONDARY GEOGRID MACHINE DIRECTION (MD)
OVERLAP 12" MIN
SECONDARY GEOGRID ROLL WIDTH 4' MIN (TYP)
SECONDARY GEOGRIDS
TOE OF RSS

GEOGRID PLACEMENT DETAILS

(% COVERAGE = $\frac{W}{W+S} \times 100 \geq 75\%$)

*SEE NOTES 6 AND 7 ON SHEET 2.

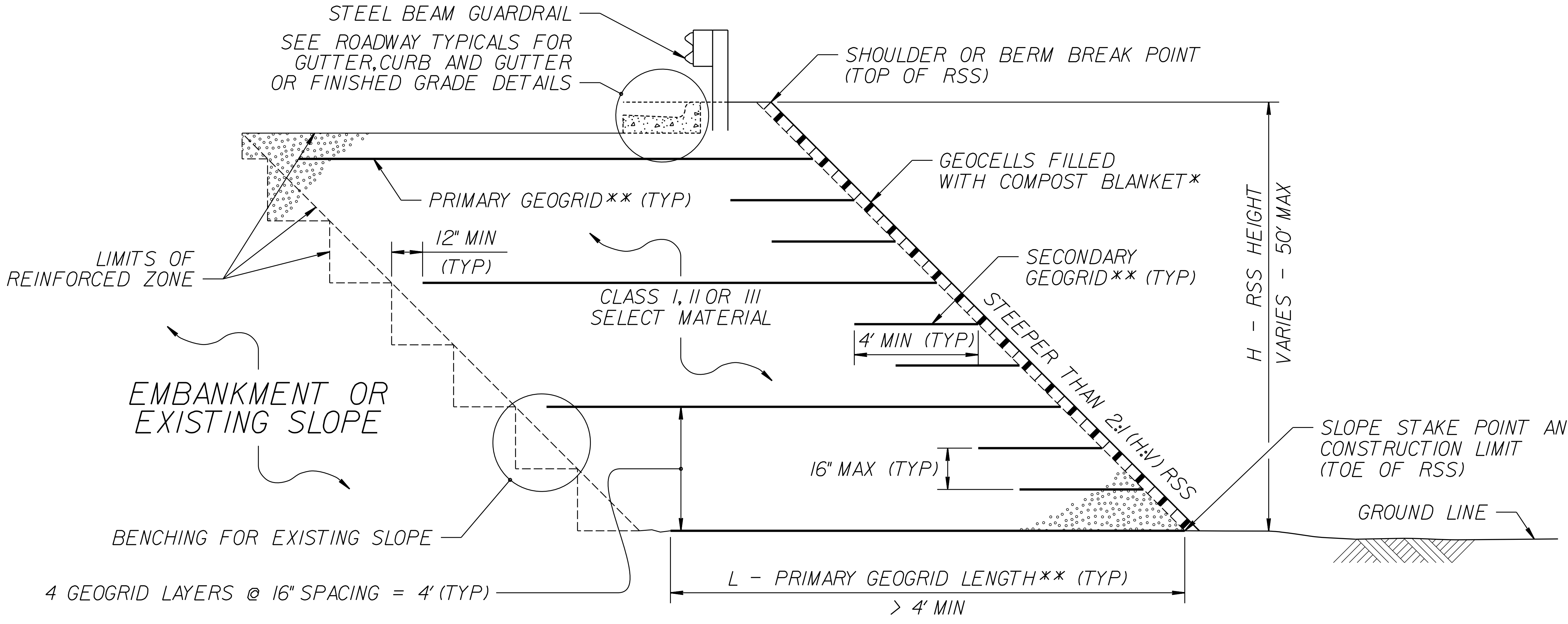

STEEL BEAM GUARDRAIL
SEE ROADWAY TYPICALS FOR GUTTER,CURB AND GUTTER OR FINISHED GRADE DETAILS
SHOULDER OR BERM BREAK POINT (TOP OF RSS)
GEOCELLS FILLED WITH COMPOST BLANKET*
PRIMARY GEOGRID** (TYP)
12" MIN (TYP)
LIMITS OF REINFORCED ZONE
CLASS I, II OR III SELECT MATERIAL
SECONDARY GEOGRID** (TYP)
4' MIN (TYP)
STEEPER THAN 2:1 (H:V) RSS
H - RSS HEIGHT VARIES - 50' MAX
EMBANKMENT OR EXISTING SLOPE
16" MAX (TYP)
SLOPE STAKE POINT AND CONSTRUCTION LIMIT (TOE OF RSS)
GROUND LINE
BENCHING FOR EXISTING SLOPE
4 GEOGRID LAYERS @ 16" SPACING = 4' (TYP)
L - PRIMARY GEOGRID LENGTH** (TYP)
> 4' MIN

GEOCELLS WITH COMPOST BLANKET

*SEE NOTES 3 AND 9 ON SHEET 2.

REINFORCED SOIL SLOPE (RSS)

**SEE TABLES ON SHEET 2 AND GEOGRID PLACEMENT DETAILS.

RK&K
P: (919) 878-9560
8601 Six Forks Road, Forum 1, Suite 700
Raleigh, North Carolina 27615-3960
NC License No. F-0112
Engineers | Construction Managers | Planners | Scientists
www.rkk.com
Responsive People | Creative Solutions

REINFORCED SOIL SLOPE (RSS)
STATIONS -L- 93+25 TO 97+25 RT &
STATIONS -L- 119+75 TO 121+25 LT
SHEET 1 OF 2

DATE: 12-16-19

PROJECT REFERENCE NO.	SHEET NO.
R-5861	2G-2

GEOTECHNICAL ENGINEER

SEAL 041709
GREGORY K. GOINS

DocuSigned by:
Gregory Goins
A40B119A1E2B43C...

10/30/2023

SIGNATURE DATE

ENGINEER

SIGNATURE DATE

DOCUMENT NOT CONSIDERED FINAL
UNLESS ALL SIGNATURES COMPLETED

GEOGRID TYPE, DIRECTION	H (FT)	0 - < 12		12 - 24		> 24 - 50	
	SELECT MATERIAL CLASS	I	II OR III	I	II OR III	I	II OR III
PRIMARY GEOGRID, MD (SUBSTITUTE SECONDARY GEOGRID FOR PRIMARY GEOGRID FOR 2:1 (H:V) OR FLATTER RSS)	1.5:1 TO 1.75:1 (H:V) RSS	500	500	900	500	1400	1000
	> 1.75:1 TO < 2:1 (H:V) RSS	500	500	600	500	1000	800
SECONDARY GEOGRID, CD	1:5 (H:V) OR FLATTER RSS	185					

LTDS – MINIMUM REQUIRED LONG–TERM DESIGN STRENGTH (LB/FT)

(LTDS IS BASED ON 100% COVERAGE FOR PRIMARY GEOGRID.
SEE NOTE 7 FOR LESS THAN 100% COVERAGE.)

NOTES:

1. SEE EROSION CONTROL AND ROADWAY PLANS AND SUMMARY SHEETS FOR REINFORCED SOIL SLOPE (RSS) AND SLOPE EROSION CONTROL LOCATIONS.

2. CONSTRUCT REINFORCED SOIL SLOPES IN ACCORDANCE WITH REINFORCED SOIL SLOPES PROVISION. FOR STEEL BEAM GUARDRAIL, SEE SECTION 862 OF THE STANDARD SPECIFICATIONS.

3. FOR SHOULDER AND SLOPE BORROW, SEE ARTICLE 1019-2 OF THE STANDARD SPECIFICATIONS. FOR GEOCELLS, SEE CELLULAR CONFINEMENT SYSTEMS PROVISION. FOR COIR FIBER MAT, MATTING FOR EROSION CONTROL AND COMPOST BLANKET, SEE EROSION CONTROL PROVISIONS, SECTION 1631 OF THE STANDARD SPECIFICATIONS AND ROADWAY STANDARD DRAWING NO. 1631.01.

4. FROM -L- 32+25 LT TO -L 33+25 LT, UNDERCUT IS REQUIRED AS SHOWN ON THE ROADWAY PLANS AND SHOULD BE PERFORMED PRIOR TO CONSTRUCTION OF THE REINFORCED SOIL SLOPE.

5. ANY UNSUITABLE SOILS ENCOUNTERED WITHIN THE LIMITS OF THE REINFORCED SOIL SLOPES SHOULD BE UNDERCUT TO FIRM MATERIAL OR TO A MINIMUM OF 3 FEET.

6. GEOGRIDS ARE TYPICALLY APPROVED FOR ULTIMATE TENSILE STRENGTHS IN THE MACHINE DIRECTION (MD) AND CROSS-MACHINE DIRECTION (CD) OR LONG-TERM DESIGN STRENGTHS FOR A 75-YEAR DESIGN LIFE IN THE MD BASED ON MATERIAL TYPE. THE LIST OF APPROVED GEOGRIDS WITH DESIGN STRENGTHS IS AVAILABLE FROM:
connect.ncdot.gov/resources/Materials/Pages/Materials-Manual-by-Material.aspx
DEFINE MATERIAL TYPE FROM THE WEBSITE ABOVE FOR SELECT MATERIAL AS FOLLOWS:

MATERIAL TYPE	SELECT MATERIAL
BORROW	CLASS I SELECT MATERIAL
FINE AGGREGATE	CLASS II OR III SELECT MATERIAL

IF THE WEBSITE DOES NOT LIST A LONG-TERM DESIGN STRENGTH FOR AN APPROVED GEOGRID IN THE MD, DO NOT USE THE GEOGRID FOR PRIMARY GEOGRID. IF THE WEBSITE DOES NOT LIST A LONG-TERM DESIGN STRENGTH FOR AN APPROVED GEOGRID IN THE CD, USE A LONG-TERM DESIGN STRENGTH EQUAL TO THE ULTIMATE TENSILE STRENGTH DIVIDED BY 7 FOR THE SECONDARY GEOGRID.

7. DO NOT OVERLAP PRIMARY GEOGRIDS IN THE MD SO OVERLAPS ARE PARALLEL TO THE TOE OF RSS. POLYOLEFIN (e.g., HDPE OR PP) GEOGRIDS MAY BE SPLICED ONCE PER PRIMARY GEOGRID LENGTH IN ACCORDANCE WITH THE GEOGRID MANUFACTURER'S INSTRUCTIONS. USE POLYOLEFIN GEOGRID PIECES AT LEAST 4' LONG. DO NOT SPLICE POLYESTER TYPE (PET) GEOGRIDS.

8. FOR PRIMARY GEOGRIDS WITH 100% COVERAGE, PLACE PRIMARY GEOGRIDS SO GEOGRIDS ARE ADJACENT TO EACH OTHER IN THE CD. FOR PRIMARY GEOGRIDS WITH 75% TO LESS THAN 100% COVERAGE,

   MINIMUM REQUIRED LONG-TERM DESIGN STRENGTH = LTDS BASED ON 100% COVERAGE x (W + S) / W

   SEE TABLE FOR LTDS BASED ON 100% COVERAGE AND GEOGRID PLACEMENT DETAILS FOR PRIMARY GEOGRID ROLL WIDTH (W) AND SPACING (S). FOR PRIMARY GEOGRIDS WITH LESS THAN 100% COVERAGE, STAGGER PRIMARY GEOGRIDS SO GEOGRIDS ARE CENTERED OVER GAPS IN THE PRIMARY GEOGRID LAYER BELOW. DO NOT USE LESS THAN 75% COVERAGE FOR PRIMARY GEOGRIDS.

9. DO NOT PLACE ANY GEOGRIDS UNTIL EXCAVATION DIMENSIONS AND IN-SITU MATERIAL ARE APPROVED.

10. FOR SLOPE EROSION CONTROL, USE GEOCELLS OR MATTING ON SLOPE FACES OF RSS AS FOLLOWS:

RSS ANGLE	SLOPE EROSION CONTROL
1.5:1 TO < 2:1 (H:V)	GEOCELLS WITH COMPOST BLANKET OR COIR FIBER MAT WITH SHOULDER AND SLOPE BORROW*
2:1 (H:V) OR FLATTER	MATTING FOR EROSION CONTROL WITH SHOULDER AND SLOPE BORROW

*SEE REINFORCED SOIL SLOPES AND SLOPE EROSION CONTROL SUMMARY TABLE IN THE ROADWAY SUMMARY SHEETS FOR SLOPE EROSION CONTROL ON SLOPE FACES OF RSS 1.5:1 (H:V) TO STEEPER THAN 2:1.

H (FT)	0 - < 12		12 - 24		> 24 - 50	
SELECT MATERIAL CLASS	I	II OR III	I	II OR III	I	II OR III
1.5:1 TO 1.75:1 (H:V) RSS	0.90	0.80	0.75	0.70	0.75	0.70
> 1.75:1 TO < 2:1 (H:V) RSS	0.75	0.70	0.65	0.60	0.65	0.60

L / H RATIO (L > 4' MIN)

(IF L ≤ 4', USE SECONDARY GEOGRID
INSTEAD OF PRIMARY GEOGRID.)

RK&K
P: (919) 878-9560
8601 Six Forks Road, Forum 1, Suite 700
Raleigh, North Carolina 27615-3960
NC License No. F-0112

Engineers | Construction Managers | Planners | Scientists
www.rkk.com

Responsive People | Creative Solutions

REINFORCED SOIL SLOPE (RSS)
STATIONS -L- 93+25 TO 97+25 RT &
STATIONS -L- 119+75 TO 121+25 LT
SHEET 2 OF 2

DATE: 12-16-19

PROJECT REFERENCE NO.	SHEET NO.
R-5861	2G-3

GEOTECHNICAL ENGINEER

SEAL 041709
GREGORY K. GOINS

DocuSigned by:
Gregory Goins
A40B119A1E2B43C...
SIGNATURE 10/30/2023 DATE

ENGINEER

SIGNATURE DATE

DOCUMENT NOT CONSIDERED FINAL
UNLESS ALL SIGNATURES COMPLETED

GROUNDWATER CONDITION (SEE NOTE 6)	H SHORING HEIGHT (FT)	SLOPE OR SURCHARGE CASE WITH NO TRAFFIC IMPACT					SURCHARGE CASE WITH TRAFFIC IMPACT				
		SHEET PILES		H-PILES WITH TIMBER LAGGING			SHEET PILES		H-PILES WITH TIMBER LAGGING		
		MINIMUM REQUIRED EMBEDMENT (FT)	MINIMUM REQUIRED SECTION MODULUS (IN^3/FT)	MINIMUM REQUIRED EMBEDMENT* (FT) (SEE NOTE 10)			MINIMUM REQUIRED EMBEDMENT (FT)	MINIMUM REQUIRED SECTION MODULUS (IN^3/FT)	MINIMUM REQUIRED EMBEDMENT* (FT) (SEE NOTE 10)		
				HP 10x42	HP 12x53	HP 14x73			HP 10x42	HP 12x53	HP 14x73
GROUNDWATER ELEVATION BEWTEEN BOTTOM OF SHORING AND PILE TIP	< 6	11.5	4.5	11.5	11.5	11.5	16.0	12.0	13.0	13.0	13.0
	7	13.0	7.0	13.0	13.0	13.0	17.0	14.5	14.5	14.5	14.5
	8	15.0	10.0	--	15.0	15.0	18.0	17.0	--	15.5	15.5
	9	17.0	14.0	--	17.0	17.0	19.0	20.0	--	17.0	17.0
	10	18.5	19.5	--	--	18.5	20.0	23.5	--	--	18.5
	11	20.5	26.0	--	--	--	21.0	28.0	--	--	20.0
	12	22.5	33.0	--	--	--	22.0	33.0	--	--	21.5
GROUNDWATER ELEVATION BELOW PILE TIP	< 6	7.5	3.0	8.0	8.0	8.0	11.0	10.0	9.5	9.5	9.5
	7	8.5	4.5	9.5	9.5	9.5	12.0	12.0	10.5	10.5	10.5
	8	10.0	6.5	10.5	10.5	10.5	12.5	14.0	11.5	11.5	11.5
	9	11.0	9.5	--	12.0	12.0	13.5	16.5	--	12.5	12.5
	10	12.5	13.0	--	--	13.5	14.0	19.5	--	13.5	13.5
	11	13.5	17.0	--	--	14.5	15.0	22.5	--	--	14.5
	12	15.0	21.5	--	--	16.0	16.0	25.5	--	--	15.5

MINIMUM REQUIRED EMBEDMENT AND SECTION MODULUS

*DO NOT USE H–PILES WITH TIMBER LAGGING FOR GROUNDWATER CONDITION, SHORING HEIGHT AND H–PILE SIZE SHOWN IF MINIMUM REQUIRED EMBEDMENT IS "– –".

NOTES:

1. AT THE CONTRACTOR'S OPTION, USE STANDARD TEMPORARY SHORING AS NOTED IN THE PLANS.
2. FOR STANDARD TEMPORARY SHORING, SEE STANDARD SHORING PROVISION.
3. STANDARD TEMPORARY SHORING IS BASED ON THE FOLLOWING IN-SITU ASSUMED SOIL PARAMETERS:
   UNIT WEIGHT, γ = 120 PCF
   FRICTION ANGLE, ϕ = 30 DEGREES
   COHESION, c = 0 PSF
4. DO NOT USE STANDARD TEMPORARY SHORING IF ASSUMED SOIL PARAMETERS ARE NOT APPLICABLE.
5. DO NOT USE STANDARD TEMPORARY SHORING WHEN VERY LOOSE OR SOFT SOIL OR MUCK IS WITHIN THE EMBEDMENT DEPTH.
6. USE GROUNDWATER ELEVATION NOTED IN THE PLANS. IF NO GROUNDWATER ELEVATION IS SHOWN IN THE PLANS, USE "GROUNDWATER ELEVATION BETWEEN BOTTOM OF SHORING AND PILE TIP" FOR GROUNDWATER CONDITION. DO NOT USE STANDARD TEMPORARY SHORING IF GROUNDWATER IS ABOVE BOTTOM OF SHORING.
7. AT THE CONTRACTOR'S OPTION OR IF AVAILABLE CLEAR DISTANCE IS LESS THAN THE MINIMUM REQUIRED FOR CONCRETE BARRIER, SET BARRIER NEXT TO AND UP AGAINST TRAFFIC SIDE OF PILES AND USE "SURCHARGE CASE WITH TRAFFIC IMPACT".
8. AT THE CONTRACTOR'S OPTION OR IF AVAILABLE CLEAR DISTANCE IS LESS THAN 4' FOR TEMPORARY GUARDRAIL, ATTACH GUARDRAIL TO TRAFFIC SIDE OF PILES AS SHOWN IN THE PLANS AND USE "SURCHARGE CASE WITH TRAFFIC IMPACT".
9. MINIMUM REQUIRED EXTENSION IS 6" FOR "SLOPE OR SURCHARGE CASE WITH NO TRAFFIC IMPACT" AND 32" FOR "SURCHARGE CASE WITH TRAFFIC IMPACT".
10. MINIMUM REQUIRED EMBEDMENT FOR H-PILES WITH TIMBER LAGGING IS BASED ON DRIVEN H-PILES AT MAXIMUM 6' SPACING. AT THE CONTRACTOR'S OPTION, EMBEDMENT DEPTHS MAY BE REDUCED BY 25% FOR DRILLED-IN H-PILES.
11. SUBMIT A "STANDARD TEMPORARY SHORING SELECTION FORM" AT LEAST 7 DAYS BEFORE STARTING TEMPORARY SHORING CONSTRUCTION. UP TO 3 SHORING LOCATIONS MAY BE INCLUDED ON EACH FORM. STANDARD SHORING SELECTION FORMS ARE AVAILABLE FROM:
    connect.ncdot.gov/resources/Geological/Pages/Geotech_Forms_Details.aspx
12. CONTACT THE ENGINEER IF PILES DO NOT ATTAIN THE MINIMUM REQUIRED EMBEDMENT.

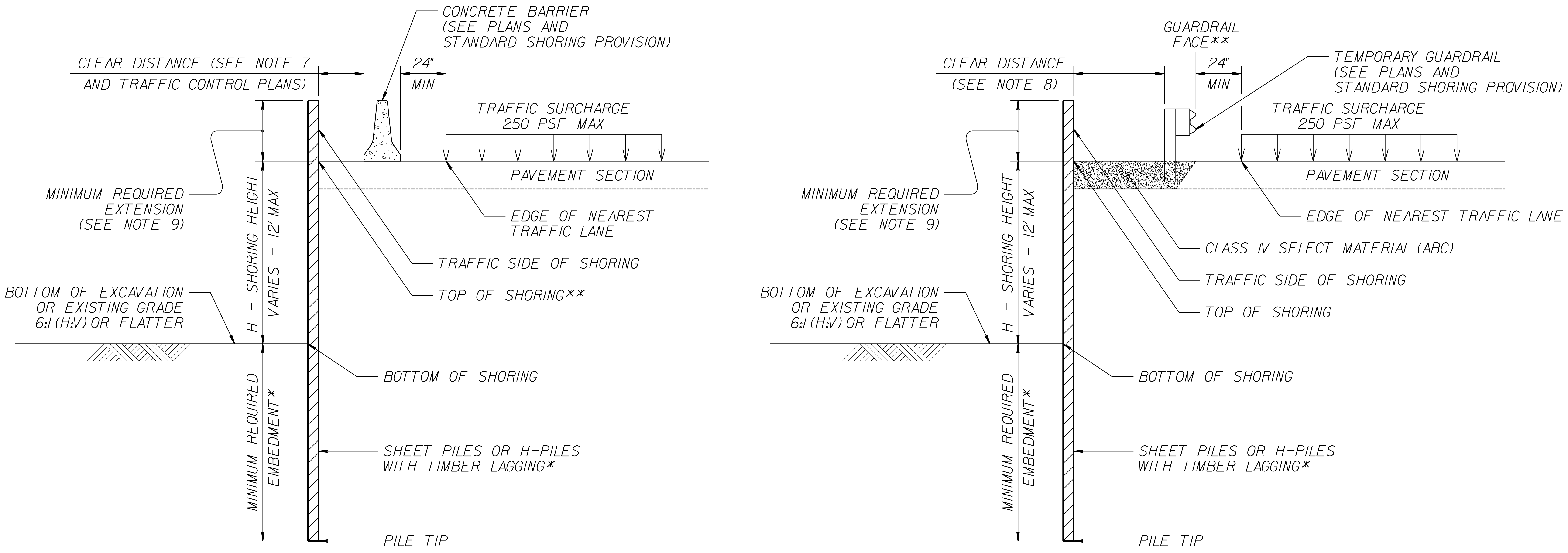
CONCRETE BARRIER (SEE PLANS AND STANDARD SHORING PROVISION)
CLEAR DISTANCE (SEE NOTE 7 AND TRAFFIC CONTROL PLANS)
24" MIN
TRAFFIC SURCHARGE 250 PSF MAX
PAVEMENT SECTION
MINIMUM REQUIRED EXTENSION (SEE NOTE 9)
EDGE OF NEAREST TRAFFIC LANE
TRAFFIC SIDE OF SHORING
TOP OF SHORING**
H - SHORING HEIGHT VARIES - 12' MAX
BOTTOM OF EXCAVATION OR EXISTING GRADE 6:1 (H:V) OR FLATTER
BOTTOM OF SHORING
MINIMUM REQUIRED EMBEDMENT*
SHEET PILES OR H-PILES WITH TIMBER LAGGING*
PILE TIP
GUARDRAIL FACE**
CLEAR DISTANCE (SEE NOTE 8)
24" MIN
TEMPORARY GUARDRAIL (SEE PLANS AND STANDARD SHORING PROVISION)
TRAFFIC SURCHARGE 250 PSF MAX
PAVEMENT SECTION
MINIMUM REQUIRED EXTENSION (SEE NOTE 9)
EDGE OF NEAREST TRAFFIC LANE
CLASS IV SELECT MATERIAL (ABC)
TRAFFIC SIDE OF SHORING
TOP OF SHORING
H - SHORING HEIGHT VARIES - 12' MAX
BOTTOM OF EXCAVATION OR EXISTING GRADE 6:1 (H:V) OR FLATTER
BOTTOM OF SHORING
MINIMUM REQUIRED EMBEDMENT*
SHEET PILES OR H-PILES WITH TIMBER LAGGING*
PILE TIP

CONCRETE BARRIER

**TOP OF SHORING = EDGE OF PAVEMENT

TEMPORARY GUARDRAIL

**GUARDRAIL FACE = EDGE OF PAVEMENT

STANDARD TEMPORARY SHORING

(SURCHARGE CASE)
*SEE TABLE ABOVE.

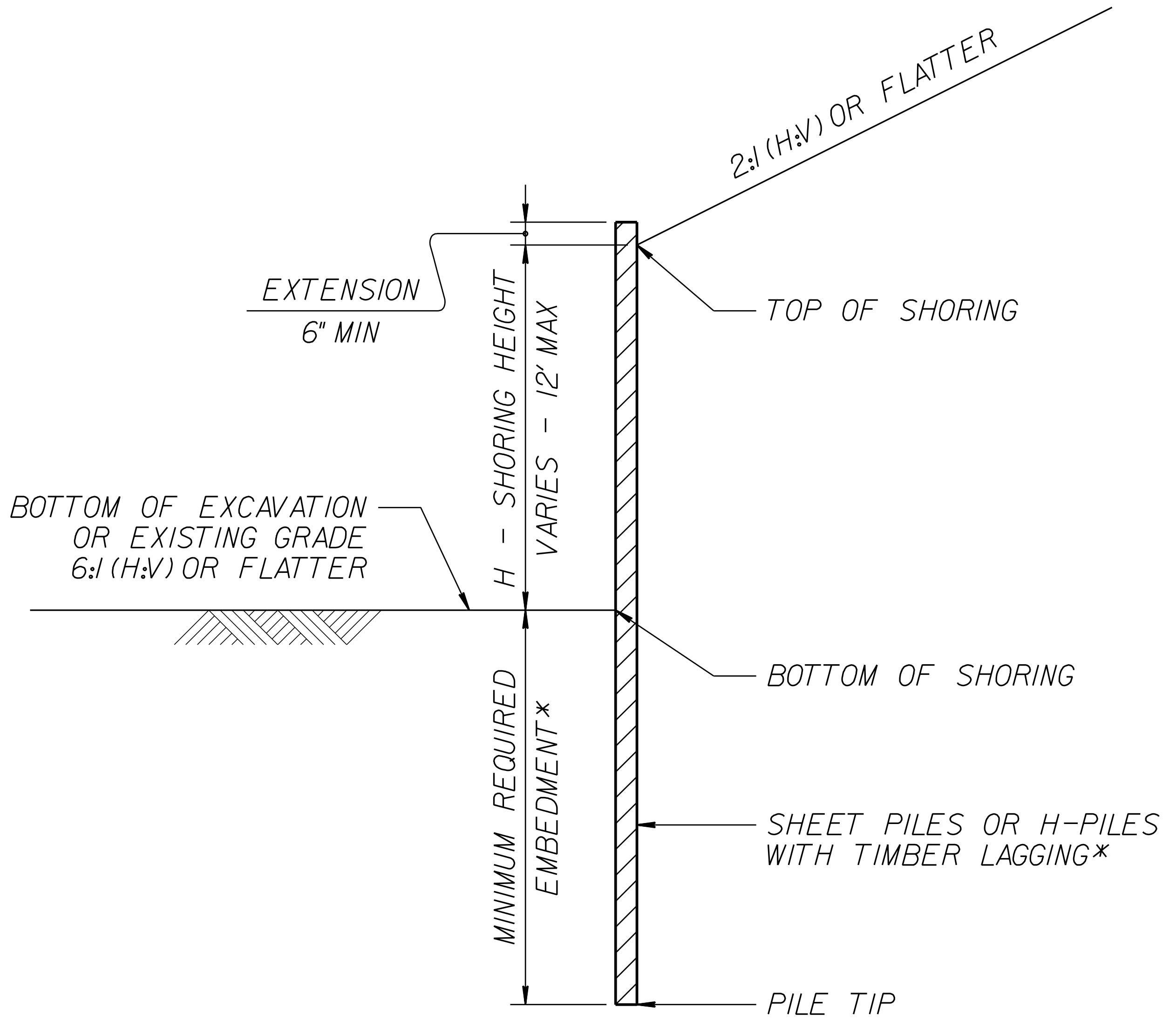
2:1 (H:V) OR FLATTER
EXTENSION 6" MIN
TOP OF SHORING
H - SHORING HEIGHT VARIES - 12' MAX
BOTTOM OF EXCAVATION OR EXISTING GRADE 6:1 (H:V) OR FLATTER
BOTTOM OF SHORING
MINIMUM REQUIRED EMBEDMENT*
SHEET PILES OR H-PILES WITH TIMBER LAGGING*
PILE TIP

STANDARD TEMPORARY SHORING

(SLOPE CASE)
*SEE TABLE ABOVE.

NORTH CAROLINA
DEPARTMENT OF TRANSPORTATION
DIVISION OF HIGHWAYS

GEOTECHNICAL ENGINEERING UNIT

STANDARD DETAIL NO. 1801.01

STANDARD
TEMPORARY SHORING

DATE: 11-19-13