DocuSign Envelope ID: F7A467A3-0561-434C-A6CD-C2ECC68CB975

PROJECT REFERENCE NO.	SHEET NO.
R-3833C	SIG-10.1

EDI MODEL 2018ECLip-NC CONFLICT MONITOR PROGRAMMING DETAIL

(remove jumpers and set switches as shown)

REMOVE DIODE JUMPERS 1-6, 1-9, 1-11, 2-5, 2-6, 2-9, 2-11, 3-7, 3-8, 3-10, 3-12, 4-7, 4-8, 4-10, 4-12, 5-9, 5-11, 6-9, 6-11, 7-10, 7-12, 8-10, 8-12, 9-11, and 10-12.

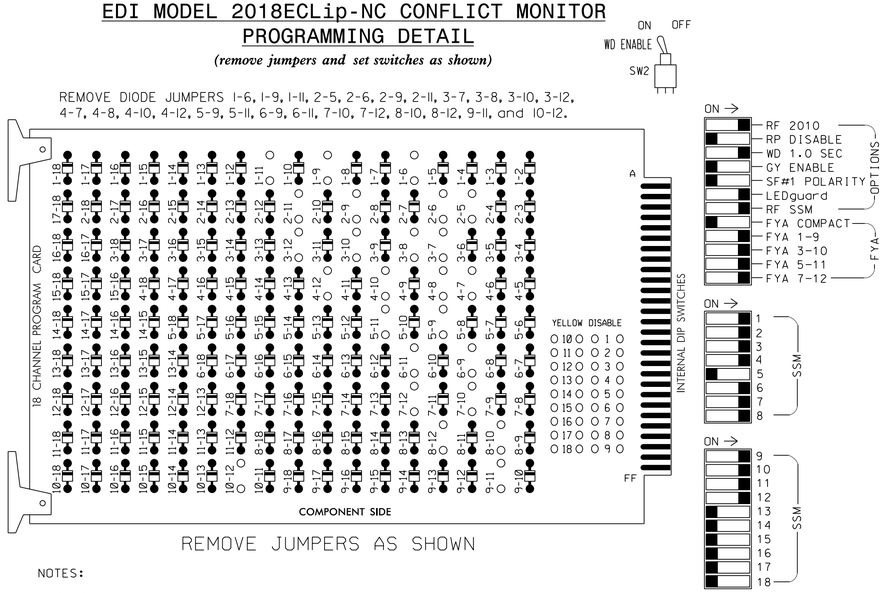

REMOVE JUMPERS AS SHOWN

■ = DENOTES POSITION OF SWITCH

NOTES:

1. Card is provided with all diode jumpers in place. Removal of any jumper allows its channels to run concurrently.
2. Ensure jumpers SEL2-SEL5 and SEL9 are present on the monitor board.
3. Ensure that Red Enable is active at all times during normal operation.
4. Integrate monitor with Ethernet network in cabinet.

NOTES

1. To prevent "flash-conflict" problems, insert red flash program blocks for all unused vehicle load switches in the output file. The installer shall verify that signal heads flash in accordance with the Signal Plans.
2. Program phases 4 and 8 for Dual Entry.
3. Program controller to start up in phase 2 Green and 6 Green.
4. If this signal will be managed by an ATMS software, enable controller and detector logging for all detectors used at this location.

EQUIPMENT INFORMATION

CONTROLLER.....2070LX
CABINET.....332 W/AUX
SOFTWARE.....ECONOLITE ASC/3-2070
CABINET MOUNT.....BASE
OUTPUT FILE POSITIONS...18 WITH AUX. OUTPUT FILE
LOAD SWITCHES USED.....S1,S2,S4,S5,S7,S8,S10,S11, AUX S1,AUX S2,AUX S4,AUX S5
PHASES USED.....1,2,3,4,5,6,7,8
OVERLAP "A".....*
OVERLAP "B".....*
OVERLAP "C".....*
OVERLAP "D".....*

* See overlap programming detail on sheet 2

SIGNAL HEAD HOOK-UP CHART

LOAD SWITCH NO.	S1		S2	S3	S4		S5		S6	S7	S8	S9	S10		S11	S12	AUX S1	AUX S2	AUX S3	AUX S4	AUX S5	AUX S6
CMU CHANNEL NO.	1		2	13	3		4		14	5	6	15	7		8	16	9	10	17	11	12	18
PHASE	1		2	2 PED	3		4		4 PED	5	6	6 PED	7		8	8 PED	OLA	OLB	SPARE	OLC	OLD	SPARE
SIGNAL HEAD NO.	11★	82	21,22 23	NU	22	31★	41,42 43	44	NU	51★	61,62 63	NU	62	71★	81,82 83	NU	11★	31★	NU	51★	71★	NU
RED		*	128		*		101	101			134		*		107							
YELLOW			129				102			*	135				108							
GREEN			130				103				136				109							
RED ARROW																	A121	A124		A114	A101	
YELLOW ARROW		126			117			102					123				A122	A125		A115	A102	
FLASHING YELLOW ARROW																	A123	A126		A116	A103	
GREEN ARROW	127	127			118	118		103		133			124	124								

NU = Not Used

* Denotes install load resistor. See load resistor installation detail this sheet.

★ See pictorial of head wiring in detail this sheet.

FYA SIGNAL WIRING DETAIL

(wire signal heads as shown)

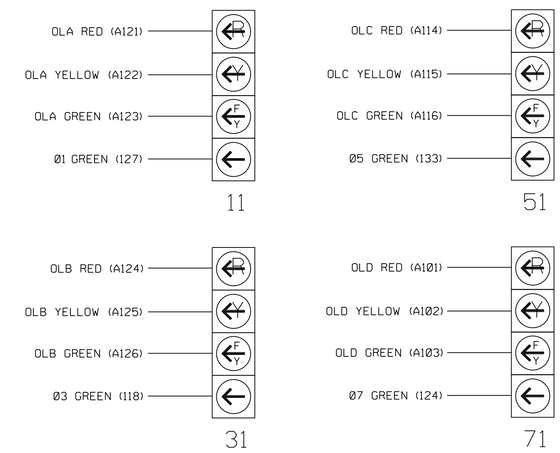

INPUT FILE POSITION LAYOUT

(front view)

		1	2	3	4	5	6	7	8	9	10	11	12	13	14
FILE "I"	U	SLOT EMPTY	SLOT EMPTY	SLOT EMPTY	SLOT EMPTY	SLOT EMPTY	SLOT EMPTY	SLOT EMPTY	SLOT EMPTY	SLOT EMPTY	SLOT EMPTY	SLOT EMPTY	SLOT EMPTY	SLOT EMPTY	FS DC ISOLATOR
	L														ST DC ISOLATOR
FILE "J"	U	SLOT EMPTY	SLOT EMPTY	SLOT EMPTY	SLOT EMPTY	SLOT EMPTY	SLOT EMPTY	SLOT EMPTY	SLOT EMPTY	SLOT EMPTY	SLOT EMPTY	SLOT EMPTY	SLOT EMPTY	SLOT EMPTY	SLOT EMPTY
	L														

EX.: 1A, 2A, ETC. = LOOP NO.'S

FS = FLASH SENSE
ST = STOP TIME

SPECIAL DETECTOR NOTE

For all detector zones, install a temporary video detection system for vehicle detection. Perform installation according to manufacturer's directions and NCDOT engineer approved mounting locations to accomplish the detection schemes shown on the Signal Design Plans.

LOAD RESISTOR INSTALLATION DETAIL

(install resistors as shown)

ACCEPTABLE VALUES

VALUE (ohms)	WATTAGE
1.5K - 1.9K	25W (min)
2.0K - 3.0K	10W (min)

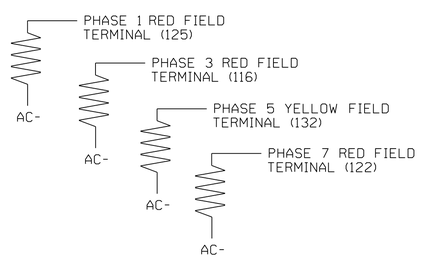

THIS ELECTRICAL DETAIL IS FOR THE SIGNAL DESIGN: 12-1369T4
DESIGNED: MAY 2022
SEALED: 3/22/2023
REVISED: N/A

Temporary Design 4 - TMP Phase III
Electrical Detail - Sheet 1 of 2

DOCUMENT NOT CONSIDERED FINAL UNLESS ALL SIGNATURES COMPLETED

Stantec
Stantec Consulting Services Inc.
801 Jones Franklin Road-Suite 300
Raleigh, NC 27606
Tel. (919) 851-6866
Fax. (919) 851-7024
www.stantec.com
License No. F-0672

Prepared for the Offices of:
Transportation Mobility and Safety Division
STATE OF NORTH CAROLINA DEPARTMENT OF TRANSPORTATION
Signal Design Section
750 N.Greenfield Pkwy,Garner,NC 27529

US 21 (Charlotte Highway) at SR 1100 (Brawley School Road) / SR 1117 (Wilson Avenue)

Division 12 Iredell County Mooresville

PLAN DATE:	May 2022	REVIEWED BY:	E D Harris
PREPARED BY:	D A Waller	REVIEWED BY:	R M Muncey

REVISIONS	INIT.	DATE

SEAL
NORTH CAROLINA PROFESSIONAL SEAL 042678 ENGINEER DERRICK A. WALLER

DocuSigned by:
Derrick Waller
SIGNATURE 3/22/2023 DATE
SIG. INVENTORY NO. 12-1369T4

21:53:24 PM
U:\Projects\Designs\Design\Electrical Details\Temporary Design\R-3833C_sig_ele_12_1369T4.dgn
Username: Usertowaller