DocuSign Envelope ID: 764A1ECC-8EEF-413E-8A93-2EA31CE938CD

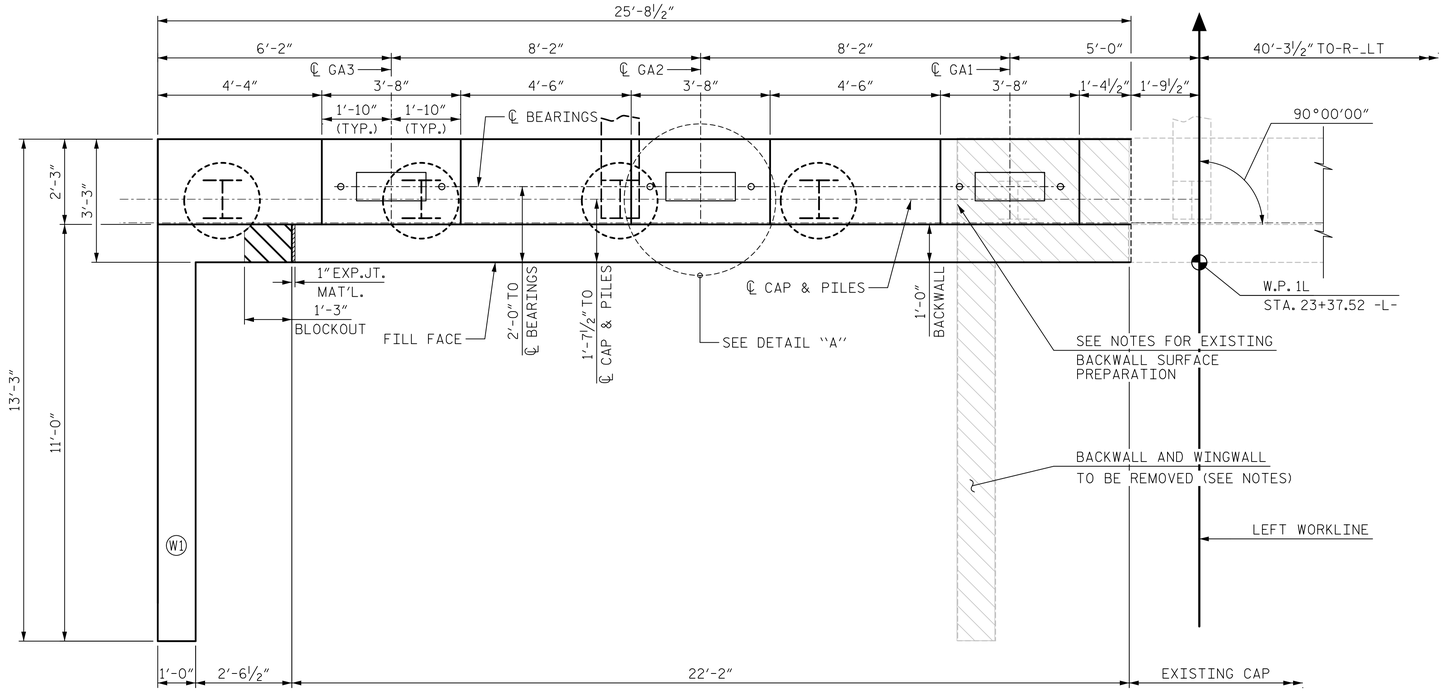

NOTES:

FOR ADDITIONAL NOTES AND PILE SPLICE DETAILS, SEE SHEET 3 OF 3.

FOR WINGWALL DETAILS AND SECTION A-A SEE SHEET 2 OF 3.

INDICATES 3:12 PILE BATTER IN DIRECTION SHOWN.

DENOTES LIMIS OF REMOVAL OF EXISTING CAP, BACKWALL AND WINGWALL

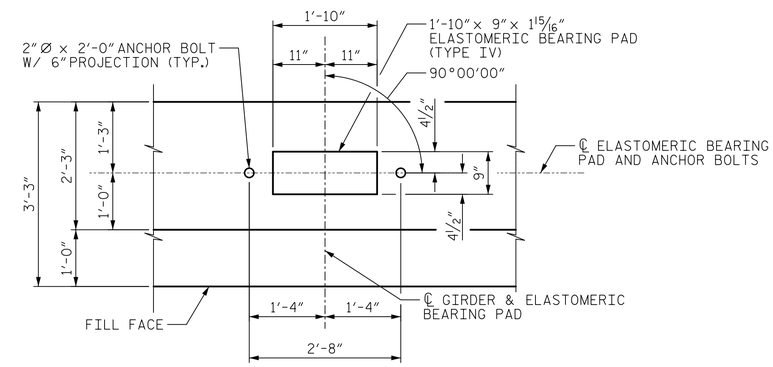

DETAIL "A"

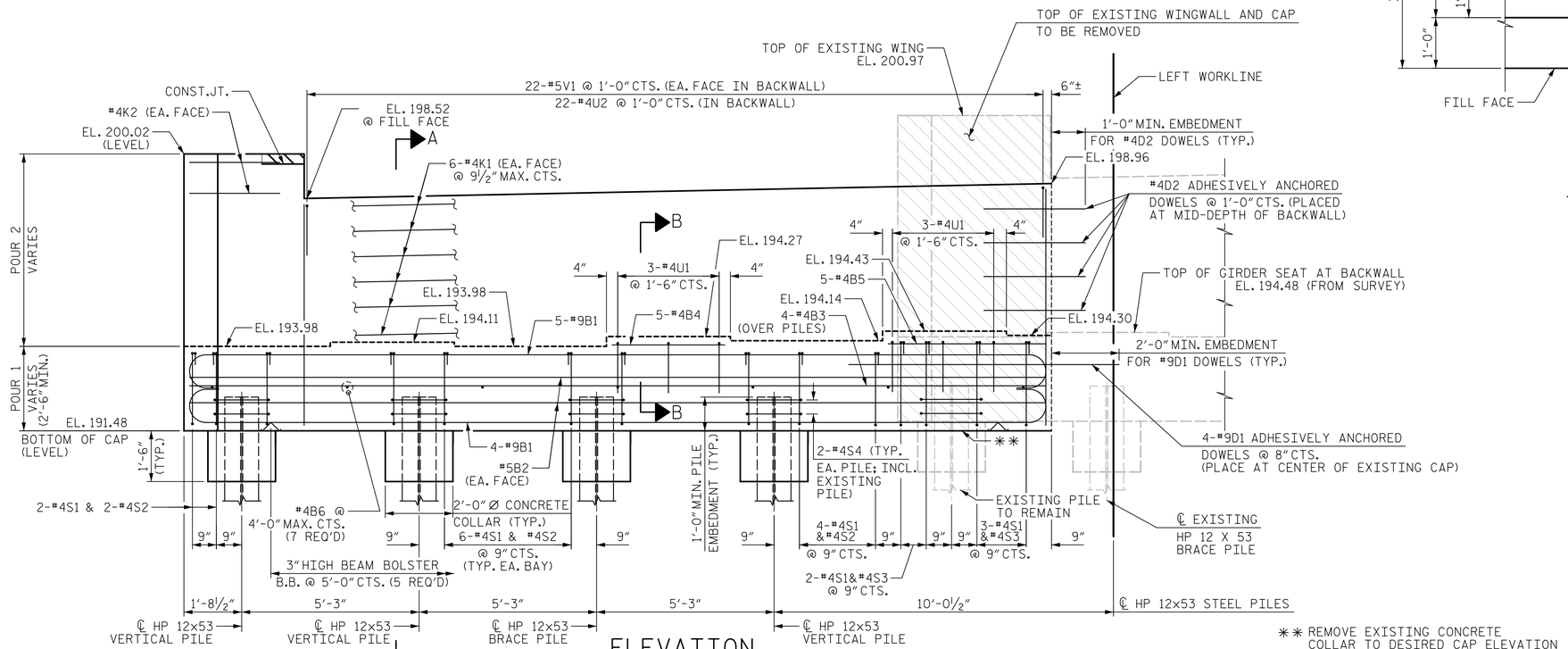

** REMOVE EXISTING CONCRETE COLLAR TO DESIRED CAP ELEVATION

ELEVATION

FOR ELEVATIONS BETWEEN BRIDGE SEATS, SEE SECTION A-A, SHEET 2 OF 3

PROJECT NO. U-5748

WAKE COUNTY

STATION: 24+88.00 -L-

SHEET 1 OF 3

AECOM

AECOM TECHNICAL SERVICES OF NC, INC.
5438 WADE PARK BOULEVARD, SUITE 200
RALEIGH, NC 27607
(919) 854-6200 www.aecom.com
AECOM License No. F-0342

STATE OF NORTH CAROLINA
DEPARTMENT OF TRANSPORTATION
RALEIGH

SUBSTRUCTURE

END BENT 1

(SOUTHBOUND LANES)

NORTH CAROLINA PROFESSIONAL SEAL 030474 ENGINEER JOHN C. MORRISON

DocuSigned by: John C. Morrison A2FDE142C82F4AB... 2/10/2023

DOCUMENT NOT CONSIDERED FINAL UNLESS ALL SIGNATURES COMPLETED

REVISIONS								
NO.	BY:	DATE:	NO.	BY:	DATE:			
1			3					
2			4					

SHEET NO. S2-36

TOTAL SHEETS 119

DRAWN BY :	M.L. CATER	DATE :	12/2020
CHECKED BY :	J.C. MORRISON	DATE :	12/2022
DESIGNED BY :	M.L. CATER	DATE :	12/2020
DESIGN CHECKED BY :	J.C. MORRISON	DATE :	12/2022

DATE: 2/9/2023
TIME: 1:05:59 PM

USER: cater.m
DGN: pw:\\aecom-na-pw.bentley.com:AECOM_DS2_NA_2020\Documents\60609754-U-5748_Upon Mill\900-CAD 60\900_CADV70_NCDOT_TIP\Structures\04 Drawings\402_073_U-5748_SMU_EB1_S2-36_9003\