DocuSign Envelope ID: 764A1ECC-8EEF-413E-8A93-2EA31CE938CD

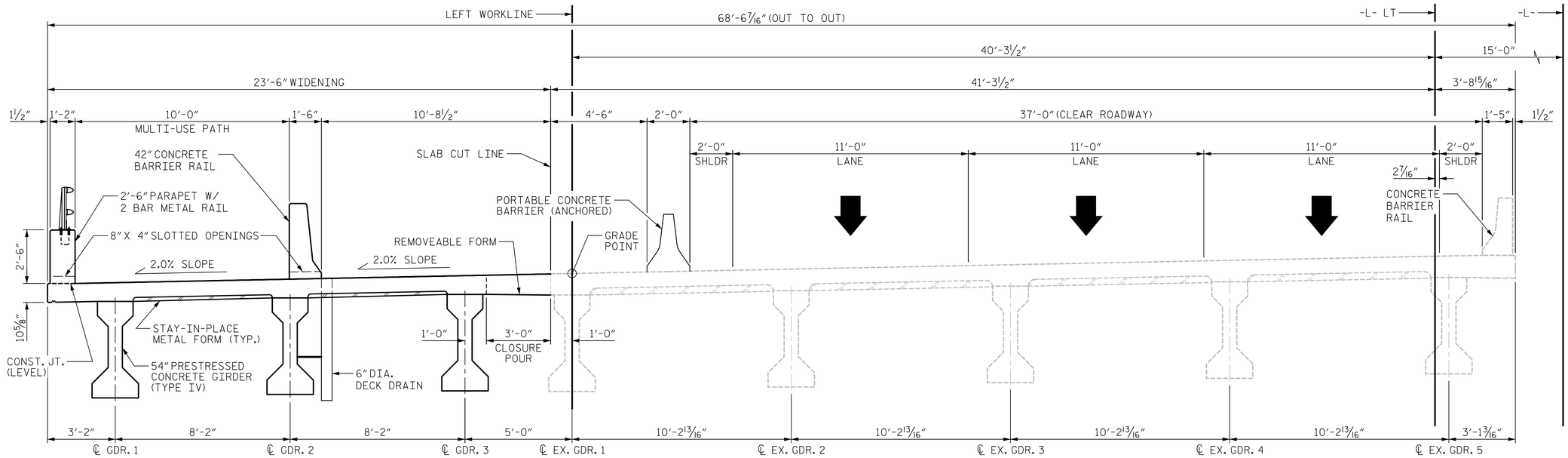

PROPOSED STRUCTURE WIDENING

(SPANS A & B)

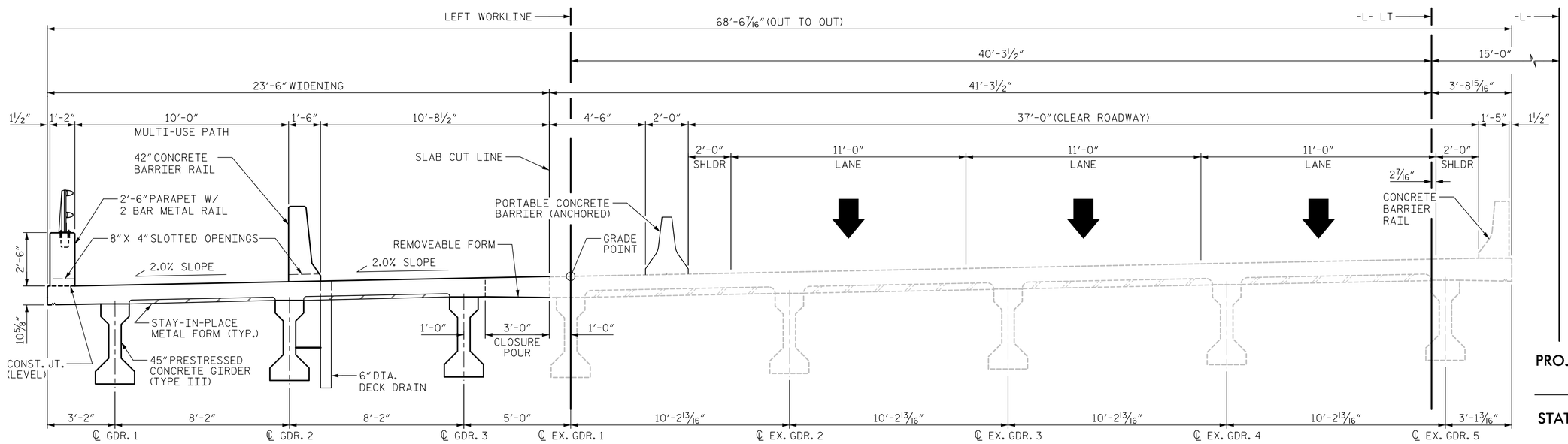

PROPOSED STRUCTURE WIDENING

(SPANS C & D)

NOTES:

FOR PHASING OF TRAFFIC DURING EXISTING STRUCTURE DEMOLITION AND PROPOSED STRUCTURE WIDENING, SEE TRAFFIC MANAGEMENT PLANS.

STAGING NOTES:

1. CONSTRUCT WIDENING BEHIND PORTABLE BARRIER (ANCHORED).
2. ONCE COMPLETED, REMOVE PORTABLE CONCRETE BARRIER (ANCHORED).
3. SHIFT TRAFFIC AS SPECIFIED TO PERFORM FOAM JOINT SEAL REPLACEMENT AND INSTALLATION, AND PERFORM PC OVERLAY PER REHABILITATION PLANS.
4. OPEN TRAFFIC TO FINAL CONFIGURATION.

PROJECT NO. U-5748

WAKE COUNTY

STATION: 24+88.00 -L-

SHEET 3 OF 4

CONSTRUCTION SEQUENCE NOTES

THE FOLLOWING ITEMS SHALL BE PERFORMED IN THIS ORDER. OTHER ITEMS MAY BE PERFORMED AT ANY TIME IN ACCORDANCE WITH THE CONTRACT, EXCEPT AS NOTED IN PLANS OR SPECIAL PROVISIONS.

1. BEARING REPLACEMENT (SEE PRESERVATION SHEETS)

2. BRIDGE SUPERSTRUCTURE WIDENING, CLOSURE POUR AND SUBSEQUENT SUPERSTRUCTURE WORK (INCLUDING SAW-CUTTING THE JOINTS, EXCEPT INSTALLATION OF FOAM JOINT SEALS).

3. DECK AND APPROACH SLAB MILLING, PC OVERLAY AND GROOVING WITHIN ROADWAY AREA.

4. SAW-CUTTING OF DECK (WITHIN EXISTING BRIDGE AREA) AND INSTALLATION OF FOAM JOINT SEALS AT ALL JOINTS.

COORDINATE STRUCTURE PLANS WITH TMP PLANS.

DRAWN BY :	M.L. CATER	DATE :	09/2020
CHECKED BY :	J.C. MORRISON	DATE :	09/2020
DESIGNED BY :	D. RITACCO	DATE :	09/2020
DESIGN CHECKED BY :	J.C. MORRISON	DATE :	09/2020

DOCUMENT NOT CONSIDERED FINAL UNLESS ALL SIGNATURES COMPLETED

AECOM
AECOM TECHNICAL SERVICES OF NC, INC.
5438 WADE PARK BOULEVARD, SUITE 200
RALEIGH, NC 27607
(919) 854-6200 www.aecom.com
AECOM License No. F-0342

NORTH CAROLINA PROFESSIONAL SEAL 030474 ENGINEER JOHN C. MORRISON

DocuSigned by: John C. Morrison A2FDE142C82F4AB... 2/10/2023

STATE OF NORTH CAROLINA
DEPARTMENT OF TRANSPORTATION
RALEIGH

CONSTRUCTION SEQUENCE

(SOUTHBOUND LANES)

REVISIONS							SHEET NO.
NO.	BY:	DATE:	NO.	BY:	DATE:		S2-08
1			3				TOTAL SHEETS
2			4				119

USER: cater.m
DGN: pw:\\aecom-na-pw.bentley.com:AECOM_DSS_NA_2020\Documents\60609754-U-5748 Lipon Mill\900-CAD\ 01\910_CADVTO_NCDOT_TIP\Structures\04 Drawings\402_DIT_U-5748_SMU_SE03_S2-08_910(3)