DocuSign Envelope ID: 764A1ECC-8EEF-413E-8A93-2EA31CE938CD

BILL OF MATERIAL

BAR	NO.	SIZE	TYPE	LENGTH	WEIGHT
✳ A1	592	5	STR	20′-2″	12452
A2	592	5	STR	20′-2″	12452
✳ B1	72	4	STR	31′-10″	1531
✳ B2	54	6	STR	23′-9″	1926
✳ B3	28	6	STR	30′-8″	1290
B4	116	5	STR	47′-6″	5747
✳ B5	36	4	STR	37′-5″	900
✳ B6	18	6	STR	44′-7″	1205
✳ B7	28	6	STR	20′-4″	855
B8	58	5	STR	58′-4″	3529
✳ D1	1184	5	STR	5′-3″	6483
✳ D2	1184	5	STR	3′-6″	4322
✳ G1	4	5	STR	20′-2″	84
✳ G2	4	5	STR	2′-8″	11
✳ K1	4	8	1	10′-1″	108
✳ K2	4	8	2	18′-10″	201
✳ K3	4	8	1	12′-2″	130
K4	9	4	STR	16′-4″	98
K5	8	4	STR	5′-10″	31
K6	8	4	STR	7′-0″	37
K7	16	4	STR	7′-4″	78
K8	8	4	STR	7′-8″	41
✳ K9	4	8	1	9′-7″	102
✳ K10	4	8	2	17′-6″	187
✳ K11	4	8	1	11′-8″	125
✳ S1	28	5	3	6′-5″	187
S2	94	4	4	2′-9″	173
✳ S3	28	5	3	5′-5″	158
U1	10	4	5	14′-6″	97
U2	4	4	5	12′-6″	33
U3	10	4	5	13′-0″	87
U4	4	4	5	11′-0″	29

REINFORCING STEEL LBS. 22,353

EPOXY COATED REINFORCING STEEL LBS. 32,596

BAR TYPES

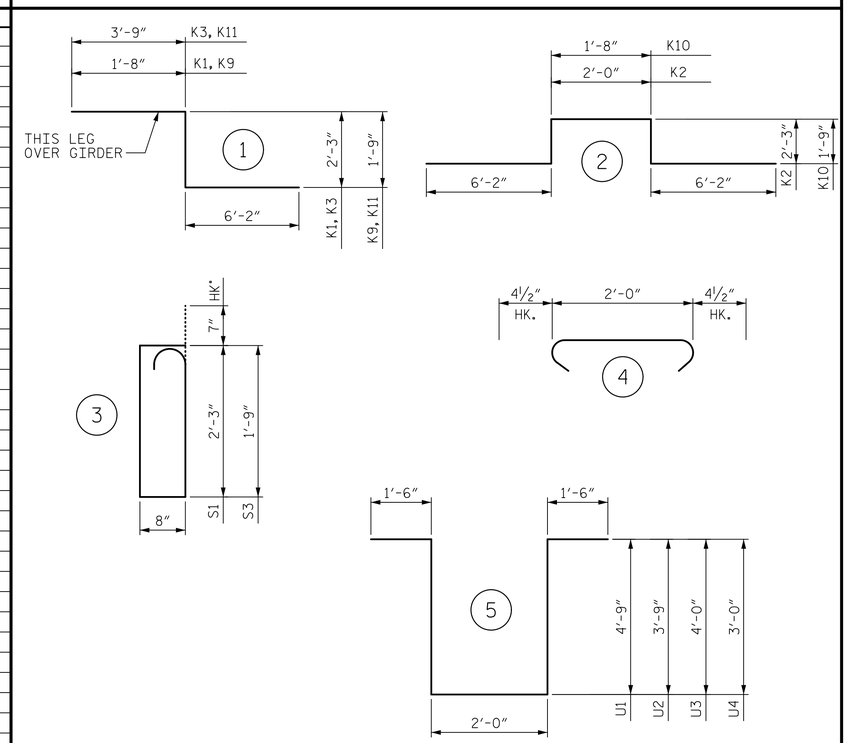

ALL BAR DIMENSIONS ARE OUT TO OUT.

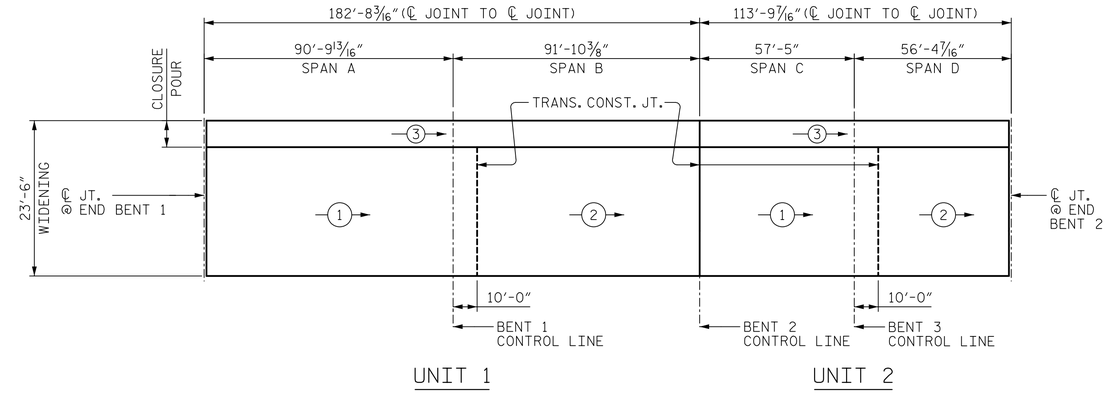

POURING SEQUENCE - PLAN

(#) → INDICATES POUR NUMBER AND POUR DIRECTION

POUR (2) SHALL NOT BE STARTED UNTIL BOTH ADJACENT POURS (1) REACH A MINIMUM OF 3,000 PSI.

ALL DIMENSIONS MEASURED ALONG -L-

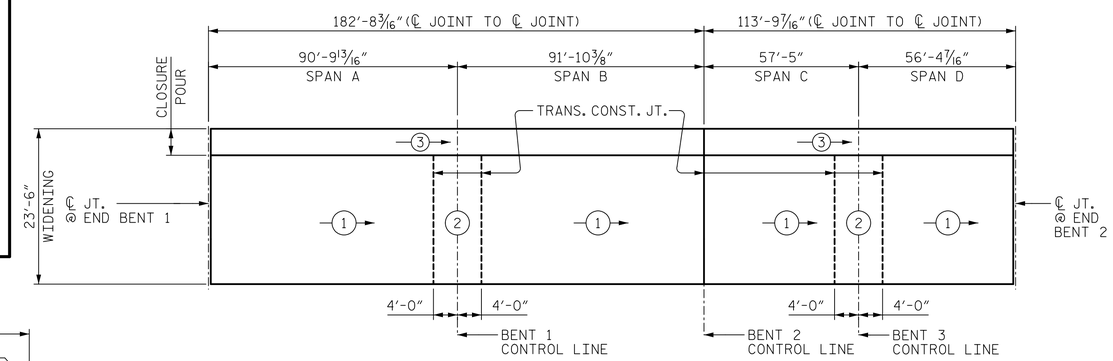

OPTIONAL POURING SEQUENCE - PLAN

(#) → INDICATES POUR NUMBER AND POUR DIRECTION

POUR (2) SHALL NOT BE STARTED UNTIL BOTH ADJACENT POURS (1) REACH A MINIMUM OF 3,000 PSI.

ALL DIMENSIONS MEASURED ALONG -L-

NOTE:

QUANTITIES FOR GROOVING BRIDGE FLOORS ARE INCLUDED IN PRESERVATION SHEETS.

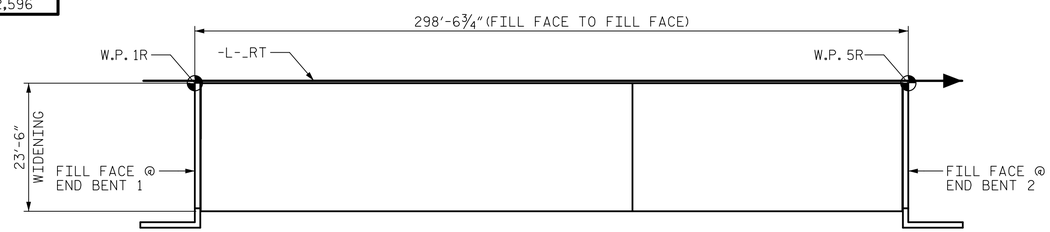

LAYOUT FOR COMPUTING AREA REINFORCED CONCRETE DECK SLAB (SQ. FT. =6,963)

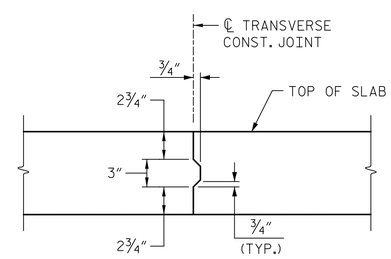

TRANSVERSE CONSTRUCTION JOINT DETAIL

NOTES: REINFORCING STEEL IN SLAB NOT SHOWN.

LONGITUDINAL REINFORCING STEEL SHALL BE CONTINUOUS THRU JOINT.

SUPERSTRUCTURE BILL OF MATERIAL

	CLASS AA CONCRETE	REINFORCING STEEL	EPOXY COATED REINFORCING STEEL
	(CU. YDS.)	(LBS.)	(LBS.)
SPANS A-D		22,353	32,596
UNIT 1 - POUR #1	74.9	---	---
UNIT 1 - POUR #2	56.6	---	---
UNIT 2 - POUR #1	50.3	---	---
UNIT 2 - POUR #2	31.7	---	---
CLOSURE POUR	17.7	---	---
TOTAL	231.2	22,353	32,596

✳ QUANTITIES FOR BARRIER RAIL AND PARAPET ARE NOT INCLUDED

SUPERSTRUCTURE REINFORCING STEEL LENGTHS ARE BASED ON THE FOLLOWING MINIMUM SPLICE LENGTHS

BAR SIZE	SUPERSTRUCTURE EXCEPT APPROACH SLABS, PARAPET, AND BARRIER RAIL		APPROACH SLABS		PARAPET AND BARRIER RAIL
	EPOXY COATED	UNCOATED	EPOXY COATED	UNCOATED	
#4	1′-11″	1′-7″	1′-11″	1′-7″	2′-6″
#5	2′-5″	2′-0″	2′-5″	2′-0″	3′-1″
#6	2′-10″	2′-5″	3′-7″	2′-5″	3′-8″
#7	4′-2″	2′-9″			
#8	4′-9″	3′-2″			

PROJECT NO. U-5748

WAKE COUNTY

STATION: 24+88.00 -L-

AECOM
AECOM TECHNICAL SERVICES OF NC, INC.
5438 WADE PARK BOULEVARD, SUITE 200
RALEIGH, NC 27607
(919) 854-6200 www.aecom.com
AECOM License No. F-0342

NORTH CAROLINA PROFESSIONAL SEAL 030474 ENGINEER JOHN C. MORRISON

DocuSigned by: John C. Morrison A2FDE142C82F4AB... 2/10/2023

STATE OF NORTH CAROLINA
DEPARTMENT OF TRANSPORTATION
RALEIGH

STANDARD

SUPERSTRUCTURE BILL OF MATERIAL

(NORTHBOUND LANES)

REVISIONS						SHEET NO.
NO.	BY:	DATE:	NO.	BY:	DATE:	S1-35
1			3			TOTAL SHEETS
2			4			119

DOCUMENT NOT CONSIDERED FINAL UNLESS ALL SIGNATURES COMPLETED

DRAWN BY :	M.L. CATER	DATE :	12/2022
CHECKED BY :	J.C. MORRISON	DATE :	12/2022
DESIGNED BY :	D.R. DRUM	DATE :	06/2021
DESIGN CHECKED BY :	J.C. MORRISON	DATE :	12/2022

STD. NO. BOM2

DATE: 2/9/2023
TIME: 12:40:06 PM
USER: cater m
DGN: pw:\\aecom-na-pw.bentley.com:AECOM_DS2_NA_2020\Documents\60605754-U-5748 Upon Mill\900-CAD GISWO_CADTO_NCDOT_TIPStructures\04 Drawings\40_DTL\U-5748_SWU_BM_S1-35_SW020