DocuSign Envelope ID: 764A1ECC-8EEF-413E-8A93-2EA31CE938CD

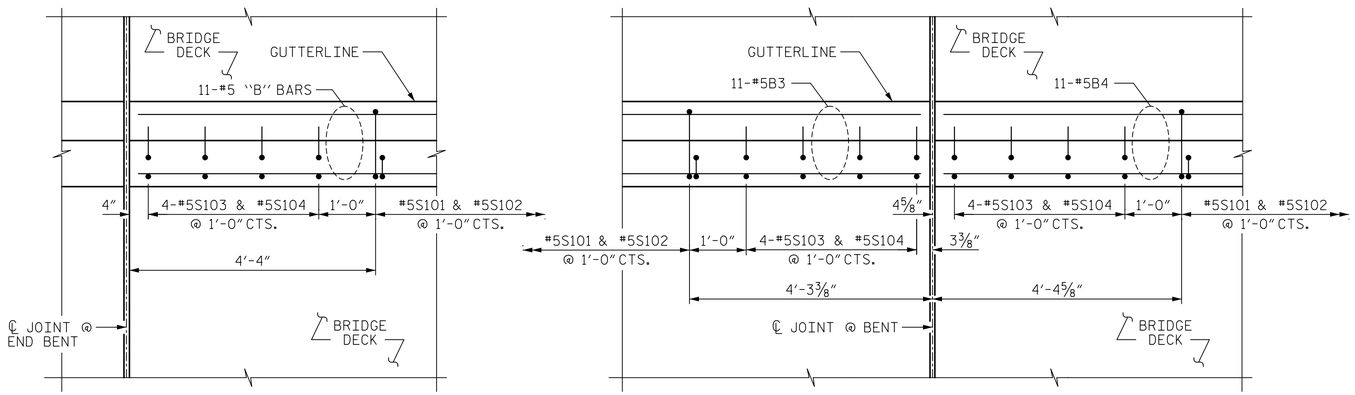

@ END BENT

END BENT 1 SHOWN, END BENT 2 SIMILAR.

@ BENT 2

PLAN OF BARRIER RAIL

NOTES

THE BARRIER RAIL IN EACH SPAN SHALL NOT BE CAST UNTIL ALL SLAB CONCRETE IN THAT SPAN HAS BEEN CAST AND HAS REACHED A MINIMUM COMPRESSIVE STRENGTH OF 3,000 PSI.

WHEN FOAM JOINT SEAL IS REQUIRED, THE JOINT IN THE DECK SHALL BE SAWED PRIOR TO THE CASTING OF BARRIER RAIL.

ALL REINFORCING STEEL IN BARRIER RAILS SHALL BE EPOXY COATED.

THE #5 S103 AND S104 BARS SHALL BE INSTALLED USING AN ADHESIVE ANCHORING SYSTEM AFTER SAWING THE JOINT. THE YIELD LOAD FOR THE #5 S103 AND S104 BARS IS 18.6 KIPS. FIELD TESTING FOR THE ADHESIVE BONDING SYSTEM IS NOT REQUIRED.

GROOVED CONTRACTION JOINTS, ½" IN DEPTH, SHALL BE TOOLED IN ALL EXPOSED FACES OF THE BARRIER RAIL AND IN ACCORDANCE WITH ARTICLE 825-10(B) OF THE STANDARD SPECIFICATIONS. THE CONTRACTION JOINT SHALL BE LOCATED AT EACH THIRD POINT BETWEEN BARRIER RAIL EXPANSION JOINTS. ONLY ONE CONTRACTION JOINT IS REQUIRED AT MIDPOINT OF BARRIER RAIL SEGMENTS LESS THAN 20 FEET IN LENGTH AND NO CONTRACTION JOINTS ARE REQUIRED FOR THOSE SEGMENTS LESS THAN 10 FEET IN LENGTH.

THE 8" WIDE X 4" HIGH FORMED DRAINAGE SLOTS MAY BE SHIFTED SLIGHTLY, AS NECESSARY, TO CLEAR THE "S" BARS IN THE BARRIER.

THE #5S103 & #5S104 BARS SHALL BE INSTALLED USING AN ADHESIVE ANCHORING SYSTEM, AFTER SAWING THE JOINT. THE YIELD LOAD FOR THE #5S103 & #5S104 BARS IS 18.6 KIPS. FIELD TESTING FOR THE ADHESIVE BONDING SYSTEM IS NOT REQUIRED.

BAR TYPES

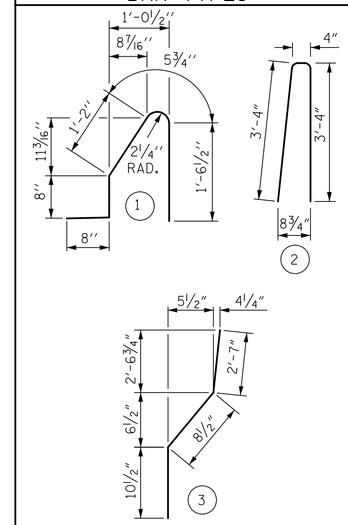

ALL BAR DIMENSIONS ARE OUT TO OUT

BILL OF MATERIAL

FOR CONCRETE BARRIER RAIL ONLY

BAR	NO.	SIZE	TYPE	LENGTH	WEIGHT
* B1	11	#5	STR	12'-4"	142
* B2	66	#5	STR	25'-7"	1761
* B3	11	#5	STR	13'-5"	154
* B4	11	#5	STR	18'-11"	217
* B5	44	#5	STR	18'-7"	853
* B6	11	#5	STR	17'-11"	206
*S101	281	#5	1	4'-6"	1325
*S102	281	#5	2	7'-0"	2052
*S103	16	#5	3	4'-2"	70
*S104	16	#5	STR	3'-6"	58
* EPOXY COATED REINFORCING STEEL				6836	LBS.
CLASS AA CONCRETE				40.4	CU. YDS.
** CONCRETE BARRIER RAIL				296.56	LIN. FT.

** DOES NOT INCLUDE APPROACH SLAB. FOR LENGTH OF CONCRETE BARRIER RAIL ON APPROACH SLAB, SEE APPROACH SLAB SHEETS.

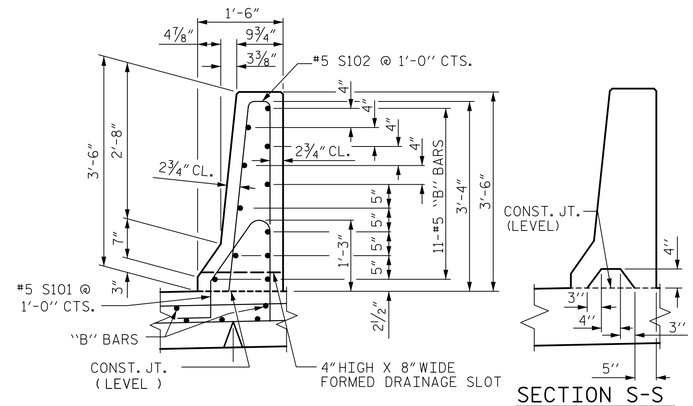

SECTION THRU RAIL

SECTION S-S

AT DAM IN OPEN JOINT (THIS IS TO BE USED ONLY WHEN SLIP FORM IS USED)

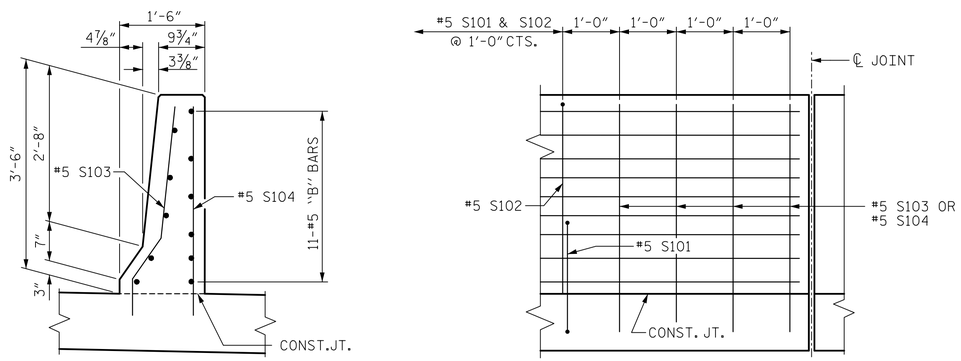

END VIEW

SIDE VIEW

END OF RAIL DETAILS @ EXP. JOINT

FOR ADHESIVE ANCHORING AT SAWED JOINTS

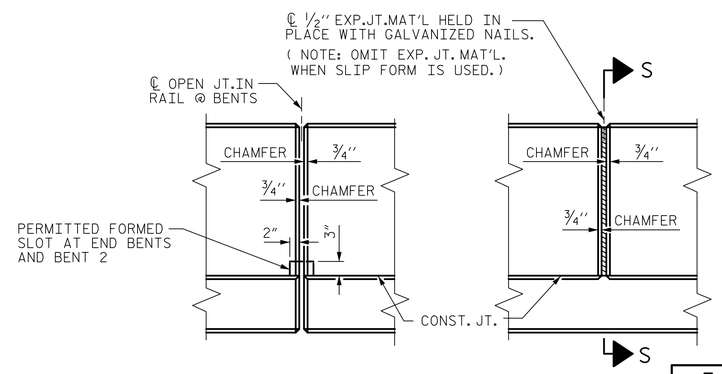

ELEVATION AT EXPANSION JOINTS

BARRIER RAIL DETAILS

PROJECT NO. U-5748

WAKE COUNTY

STATION: 24+88.00 -L-

AECOM

AECOM TECHNICAL SERVICES OF NC, INC.
5438 WADE PARK BOULEVARD, SUITE 200
RALEIGH, NC 27607
(919) 854-6200 www.aecom.com
AECOM License No. F-0342

NORTH CAROLINA PROFESSIONAL SEAL 030474 ENGINEER JOHN C. MORRISON

DocuSigned by: John C. Morrison A2FDE142C82F4AB... 2/10/2023

DOCUMENT NOT CONSIDERED FINAL UNLESS ALL SIGNATURES COMPLETED

STATE OF NORTH CAROLINA
DEPARTMENT OF TRANSPORTATION
RALEIGH

STANDARD

CONCRETE BARRIER RAIL

(NORTHBOUND LANES)

REVISIONS							SHEET NO.
NO.	BY:	DATE:	NO.	BY:	DATE:		S1-28
1			3				TOTAL SHEETS
2			4				119

ASSEMBLED BY : D.R. DRUM		DATE : 06/2021	
CHECKED BY : J.C. MORRISON		DATE : 06/2021	
DRAWN BY : ARB 5/87	REV. 7/12	MAA/GM	
CHECKED BY : SJD 9/87	REV. 6/13	MAA/GM	
	REV. 12/17	MAA/THC	

STD. NO. CBR1

DATE: 2/9/2023 TIME: 12:36:53 PM
USER: cafarm DGN: pw:\\aecom-na-pw.bentley.com:AECOM_DS2_NA_2020\Documents\60609754-u-5748 Lyon Mill\900-CAD 01\930_CADD_NCDOT_TIP\Structures\04 Drawings\4D_D57_U-5748_SMU_BR2_S1-28_SN(D)